Dec. 31, 1946. A. G. HATCH 2,413,449

METHOD OF MAKING SEALED FIBER CONTAINERS AND CLOSURES THEREFOR

Filed Feb. 26, 1944

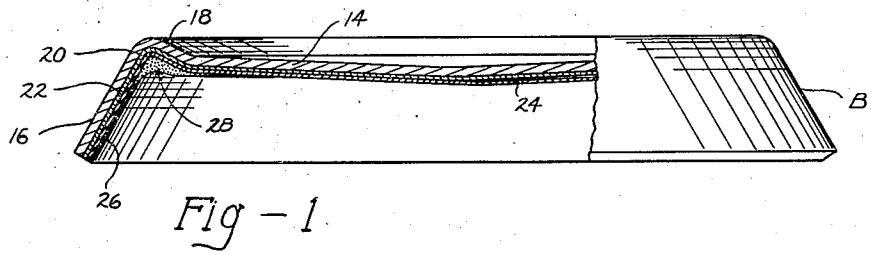

Fig - 1

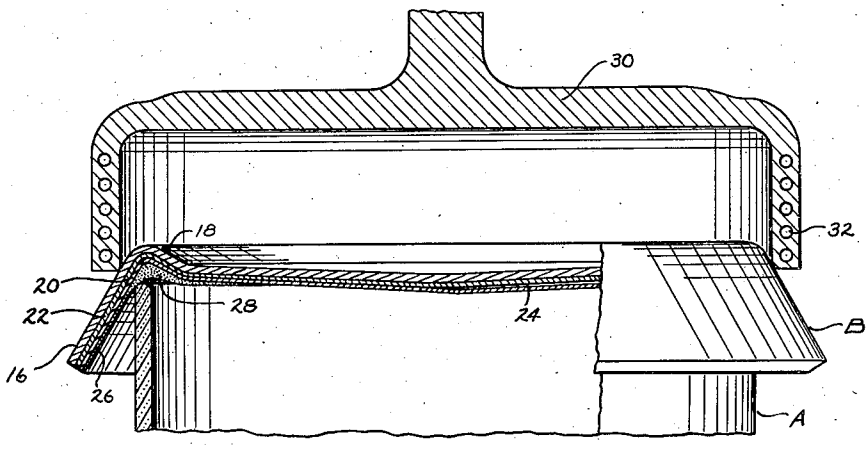

Fig - 2

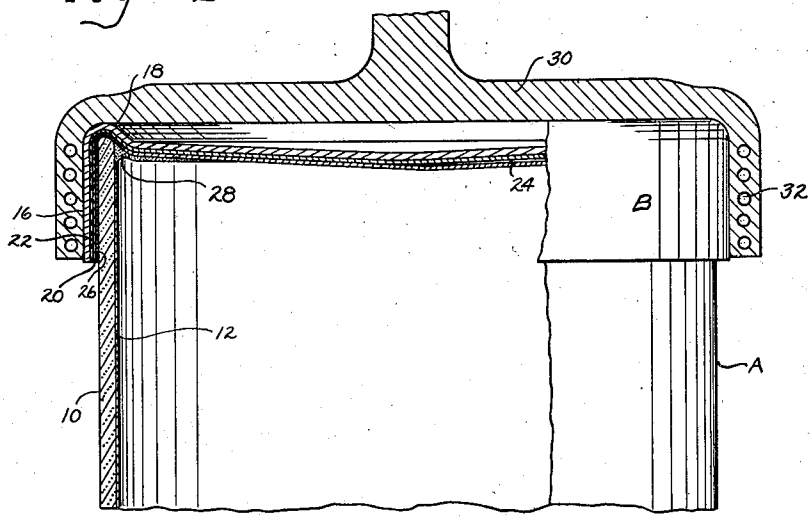

Fig - 3

Inventor

ALEXANDER G. HATCH

By Lindsey and Robillard.

Attorney

Patented Dec. 31, 1946 2,413,449

UNITED STATES PATENT OFFICE

2,413,449

METHOD OF MAKING SEALED FIBER CONTAINERS AND CLOSURES THEREFOR

Alexander G. Hatch, Rutland, Vt., assignor, by mesne assignments, to Continental Can Company, Inc., New York, N. Y., a corporation of New York

Application February 26, 1944, Serial No. 524,146

5 Claims. (Cl. 93—55.1)

1

The present invention relates to fiber containers and is more specifically directed to a method of making sealed fiber containers and closures therefor. Although the invention finds particular application in the making of containers for the packaging of oils, and for that reason is so described herein, in its broader application, containers made by the present invention find use wherever it is necessary to prevent loss of contents from the container or entrance of gases into the container.

The foregoing is accomplished by effecting a liquid tight seal or joint between the closure and the inner surface of the body member thereby preventing egress of material or ingress of gases even though complete sealing of the outer flange does not result or some loosening of the outer flange occurs in shipping.

The method also lends itself to the sealing of fiber containers as they are delivered from standard metal-can filling machines now in use in most refineries and at speeds comparable with those obtained in closing metal containers, and further it results in a seal which resists blows and shocks equally as well as does that obtained by the conventional all-metal can.

Fig. 1 is a view of a closure made in accordance with the present invention.

Fig. 2 is a view showing the closure positioned just prior to the sealing operation, and

Fig. 3 shows the completely sealed container.

Referring to the drawing the method can be best understood by reference to the container resulting therefrom which container comprises generally an open ended body member A and closure B.

In the embodiment illustrated the open ended body member A comprises a sheet 10 of suitable fibrous material convolutely wound upon itself into a plurality of plies to provide sufficient strength and bulk. In the body shown, chipboard is used and it is rendered oil proof by lining its inner surface with a sheet of suitable oil-resistant sheet material 12 such as Cellophane. The lining material will, of course, vary with the contents to be packaged, being in each case impervious to the selected fluids to be packaged. In place of a sheet material like results may be obtained by impregnating or coating the inner body surface with a suitable material impervious to selected fluids, such as plasticized animal glue, when oil is to be packaged.

The closure member B is made of any suitable material which can be drawn or molded, it being here shown as made of kraft paper and includes

2

a disk portion 14 and a downwardly and obliquely flaring peripheral flange 16. The disk 14 should have a diameter approximately equal to the outside diameter of the container body A whereby the flange, when drawn perpendicular to the disk will closely engage the body. The disk 14 is preferably depressed inwardly and the margin 18 inclined upwardly and outwardly to provide a conical portion terminating in the flange 16, thus forming a channel 20 at the juncture of the flange and disk for reasons hereafter apparent.

When the closure is not, as here, made from an oil-repellant material it is rendered oil proof by covering the inner surface with a sheet of suitable oil-proof material such as Cellophane or by coating with an oil-resistant material. When a Cellophane lining is used, it is secured to the inner face of the closure by suitable adhesive 22, such securing preferably being limited to the flange. In this way the disk portion 24 of the lining is free from the disk A permitting relative movement without rupturing should the closure disk be bulged outwardly.

In making the lined closure like strips of cap and lining stock are cut and one coated with a thin layer of the thermoplastic adhesive 22 which is then permitted to dry. Thereafter the strips are superimposed with the coating between same and passed through a conventional cap press having male and female dies conforming to the shape of the cap. As the dies are brought together sufficient heat will be generated, due to friction caused by forming the flange to render the adhesive viscous and tacky resulting in adherence of the closure body member and lining at the flange. If it is desired to secure the lining to the disk it will be necessary to heat the die R from an outside source as the heat ordinarily generated by friction is insufficient to render the adhesive tacky except at the flange.

There is now applied to the closure a coating of normally non-viscous thermoplastic adhesive material, such coating being placed on the inner face of the flange and disk, with the coating at the juncture being of increased thickness to form a sealing ring 28. To accomplish this the closure member B is arranged on any suitable rotating device and is rotated while a pre-determined quantity of thermoplastic material 26 in viscous form is deposited on the disk near the outer periphery. By controlling the speed of rotation with respect to the viscosity of the thermoplastic material said material may be made to flow outwardly and up the side of the flange. When the required quantity has been applied

and the flange has been properly coated rotation is stopped and the excess material collects at the juncture between the flange and disk thus forming a sealing ring **28** of increased thickness in this area. This result is facilitated by making the cap with the disk portion depressed as shown, whereby the resulting ring **28** substantially fills the channel **20**.

When the closure member has not been rendered oil proof by other means the entire cap is covered with thermoplastic by depositing a predetermined quantity at the center of the disk instead of off-center and then proceeding as described above. In either case after rotation has been stopped the caps are held in a horizontal position until the thermoplastic material sets and becomes non-viscous.

In completing the container the cap B is inverted and placed on the open end of the can body, the outwardly flared flange **16** permitting the closure to be accurately and rapidly positioned on the body A. A die **30**, heated as by an enclosed electrical element **32**, is then forced down over the cap, the diameter of this die being such that it will pull the flange of the cap into close engagement with the outside surface of the can body, causing the end of the body to wipe along the inner face of the flange just below the ring **28**. The degree of heat provided by the die depends on the type of thermoplastic used and the time interval available. I have found that when using plasticized animal glue as the thermoplastic a heat of 400° F. held for ten seconds gives an excellent flow.

When the desired flow has been obtained the hot die is removed while the body and closure are continually urged axially toward one another under pressure whereupon because of the close engagement between the flange and body, the edge of the latter will force its way into the ring **14** adjacent the flange and displace or flow the excess material inwardly to shift the ring **28** and relocate it in the corner between the inner face of the body and the inner face of the disk **14**.

Thereafter the closure is permitted to cool and the plastic rendered non viscous, this preferably being accomplished by applying a second die similar to die **32** but of hollow construction through which a coolant is flowed. In this way the plastic rapidly becomes non viscous and set though still retaining some resiliency. The application of the cold die not only serves to rapidly set the thermoplastic but is important in sealing closed cans as it maintains pressure on the closure to retain it in place against the internal pressure built up in the can by the expansion of air or gas because of the heat imparted by the hot die. This external pressure is maintained until such time as the thermoplastic has set and the entrapped air or gas within the container has been cooled and the external pressure neutralized.

By the foregoing method the completed container includes the ring or fillet **28** between the inner face of the can body and the inner face of the closure which forms an effective seal and prevents the contents from seeping up along the inner face of the body to the raw edge thereof as well as the ingress or egress of gases. The fillet also functions to secure the closure and in addition the thermoplastic not wiped from the flange forms a tight bond between the flange and closure firmly binding the closure to the body. In addition to this the method disclosed permits oil companies to substitute a paper container for their present metal container with an attendant saving in cost without adding additional labor in sealing and without sacrificing their accustomed speed of filling.

The following is claimed:

1. The method of making a can closure which comprises laminating a strip of cap stock and a strip of sheet material impervious to selected fluids, drawing therefrom a cap having a disk portion and a peripheral flange depending from the disk portion, applying to a portion of the disk and flange a normally non-viscous thermoplastic adhesive rendered viscous by heat, and causing said adhesive to form into a ring of excess thickness at the juncture of the flange and disk.

2. The method of making a sealed fiber container which comprises forming a closure with a disk portion and circumferential flange for engaging the exterior of the body, applying a heavy coating of normally non-viscous thermoplastic adhesive preheated to viscousness at the juncture of the disk and flange, cooling the adhesive, arranging the closure on the open end of the body with the end of the body underlying the thermoplastic, applying heat to the closure to render the adhesive viscous and tacky, displacing the excess adhesive inwardly by axially urging the closure and body together, then permitting the closure to cool to cause said displaced adhesive to become non-viscous and seal the closure to the body and provide a fillet between the inner surface of the container and the inner face of the disk.

3. The method of making a sealed fiber container which comprises providing an open end fiber body, providing a closure having a disk portion and flange portion connected to the disk portion by a channel, substantially filling the channel with a normally non-viscous thermoplastic adhesive rendered viscous by heat and allowing same to cool, arranging the closure on the body with the open end of the body underlying the adhesive filled channel, rendering said adhesive tacky by heating the same, forcing the closure and body toward one another to cause the body end to enter the channel while drawing the flange close to the body to displace the adhesive inwardly, then cooling the adhesive to normal temperature to seal the closure and body together.

4. The method of making a sealed fiber container which comprises providing an open end body, providing a closure having a disk portion adapted to overlie the open end of the body and of like size thereto and a flange depending from the disk for closely engaging the exterior of the body, flaring the flange outwardly to permit ready positioning on the body, forming a ring of normally non viscous thermoplastic adhesive at the juncture of the flange and disk, positioning said closure on the body, applying heat and pressure to render the ring viscous, force the closure onto the body and contract the flange against the body, maintain the pressure until the adhesive flows to form a film between the flange and disk and a fillet in the corner between the inside surface of the can body at the end thereof and the inside surface of the cap then while maintaining the pressure cool the closure to render the ring non viscous.

5. The herein described method which consists in drawing a cap having a central disk portion and a circumferential depending outwardly flared flange, applying an oilproof, normally non-viscous thermoplastic adhesive preheated to viscousness at the juncture of the flange and the disk portion to form a sealing ring, permitting the thermoplastic adhesive to cool, heat-sealing the

closure thus formed to the top of a filled can body by applying heat and pressure to the flange while axially urging the closure and can body towards one another so as to render the thermoplastic adhesive viscous and tacky, contract the flange against the outside wall of the can body, embed the end edge of the can body in the thermoplastic

sealing ring, and cause the excess thermoplastic material thereof to form a fillet or gasket in the corner between the inside surface of the can body at the end thereof and the inside surface of the cap, and then while maintaining the pressure cooling the adhesive to normal temperature.

ALEXANDER G. HATCH.