J. SIMPSON.

AUTOMATIC FLYING SHEARS.

APPLICATION FILED APR. 8, 1911.

1,037,675.

Patented Sept. 3, 1912.

7 SHEETS—SHEET 1.

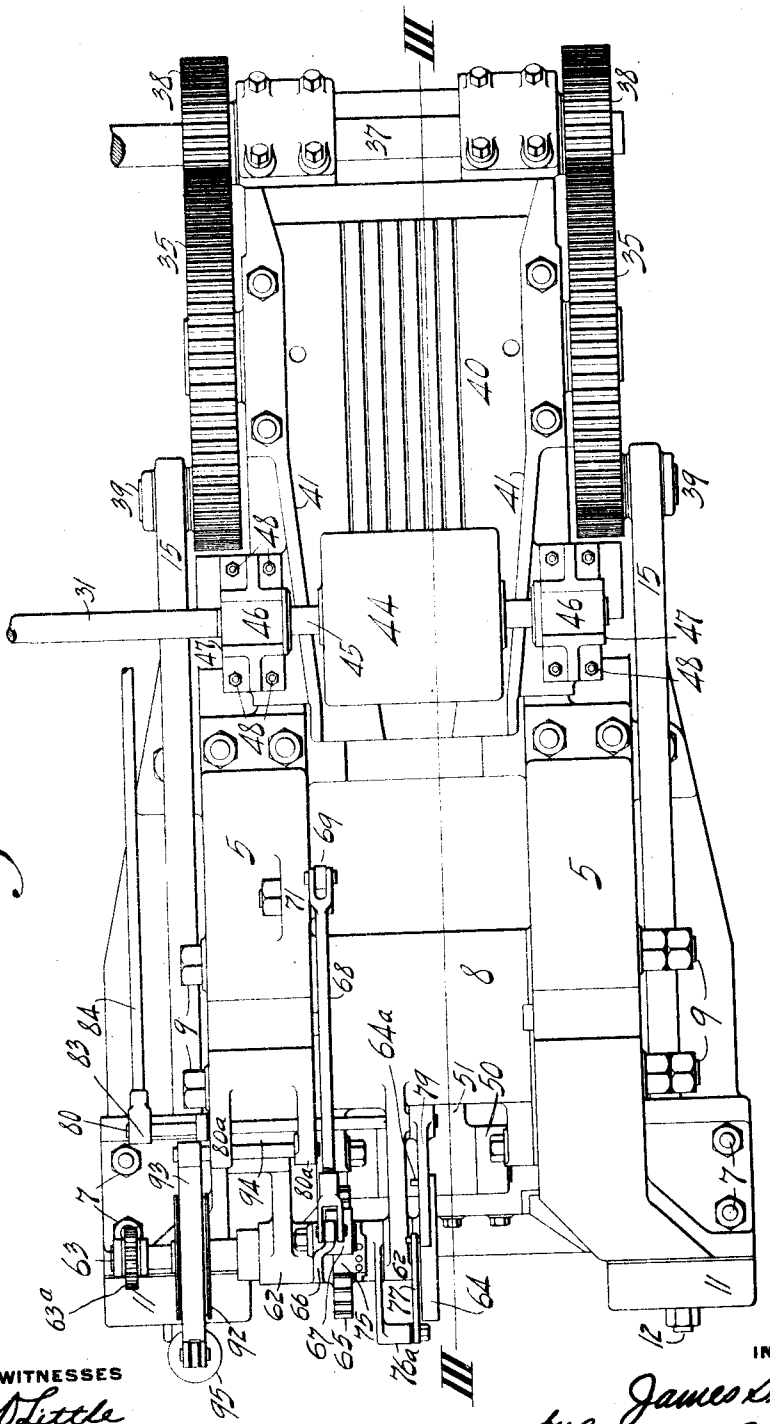

Fig. 1

WITNESSES

R. B. Little

J. L. Wouters

INVENTOR

James Simpson

by Lothrop, Bell & Fuller

his Attorneys

J. SIMPSON.

AUTOMATIC FLYING SHEARS.

APPLICATION FILED APR. 8, 1911.

1,037,675.

Patented Sept. 3, 1912.

7 SHEETS—SHEET 2.

Fig. 2

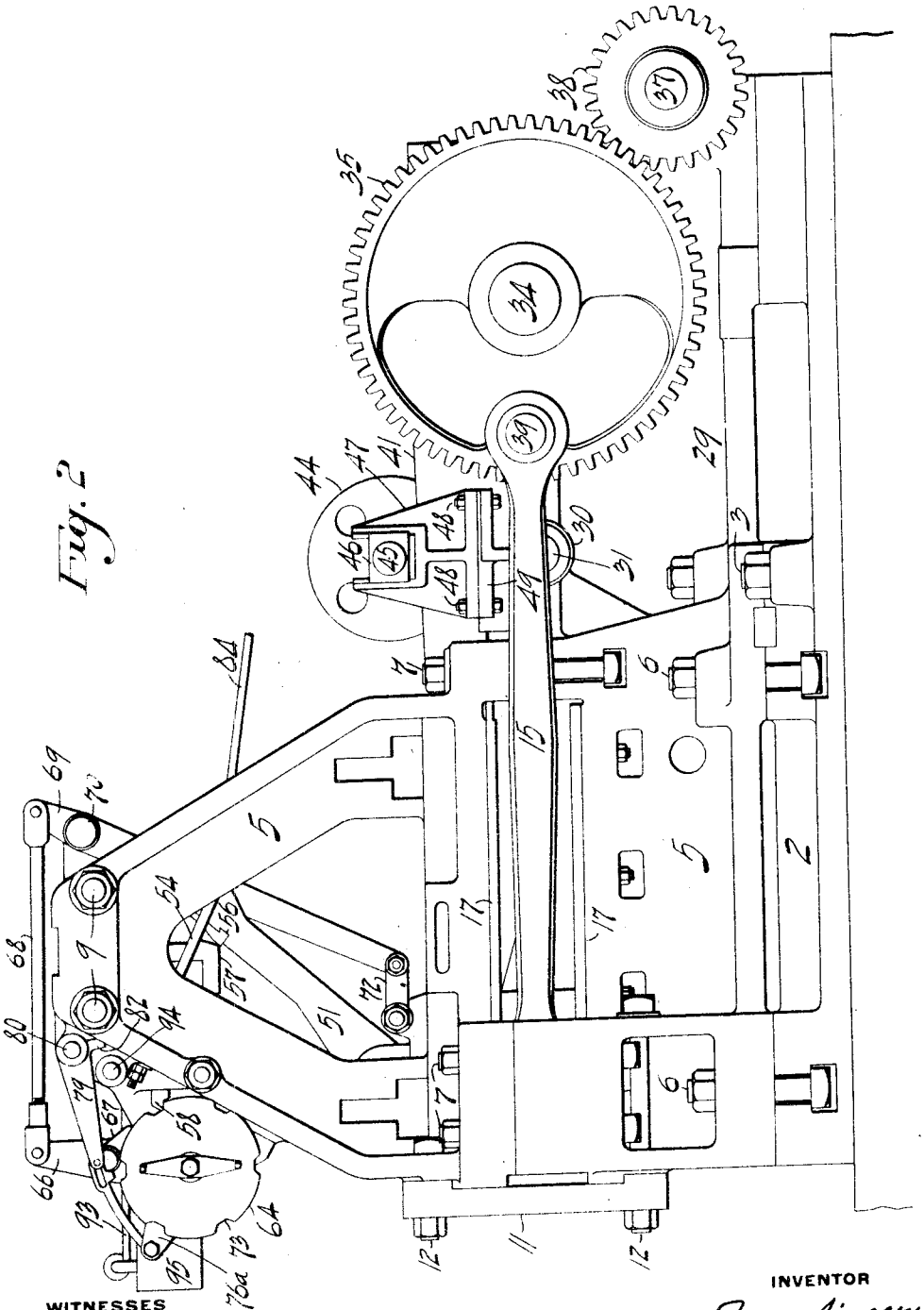

WITNESSES

R. S. Little

G. L. Winters

INVENTOR

James Simpson

by Smithcum Bell & Fuller

his Attorneys

J. SIMPSON.

AUTOMATIC FLYING SHEARS.

APPLICATION FILED APR. 8, 1911.

1,037,675.

Patented Sept. 3, 1912.

7 SHEETS—SHEET 3.

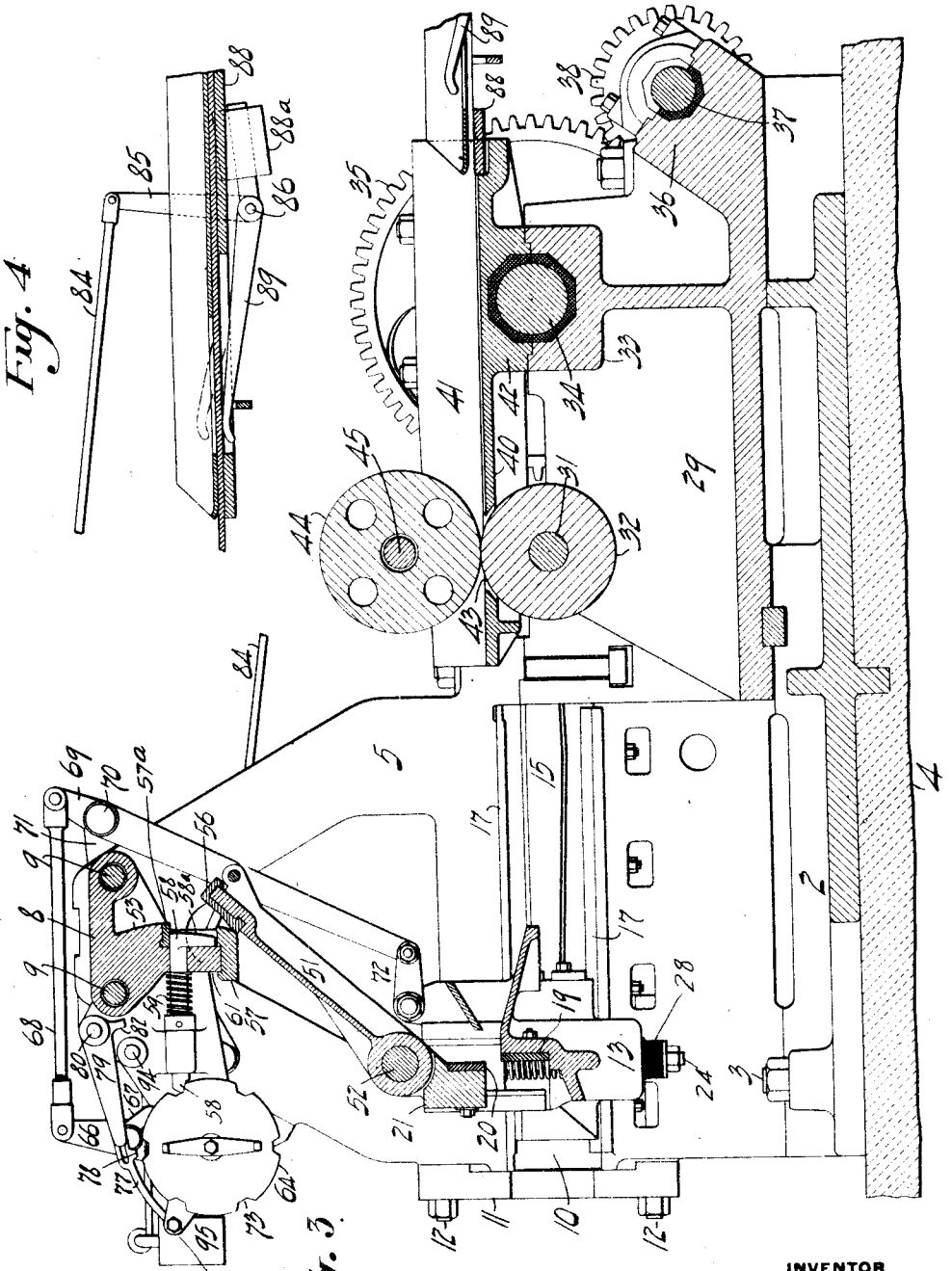

Fig. 4

Fig. 3

WITNESSES

R. S. Little

G. L. Winters

INVENTOR

James Simpson

by Linthicum Belt & Fuller

his Attorneys

J. SIMPSON.

AUTOMATIC FLYING SHEARS.

APPLICATION FILED APR. 8, 1911.

Patented Sept. 3, 1912.

1,037,675.

7 SHEETS—SHEET 4.

Fig. 5

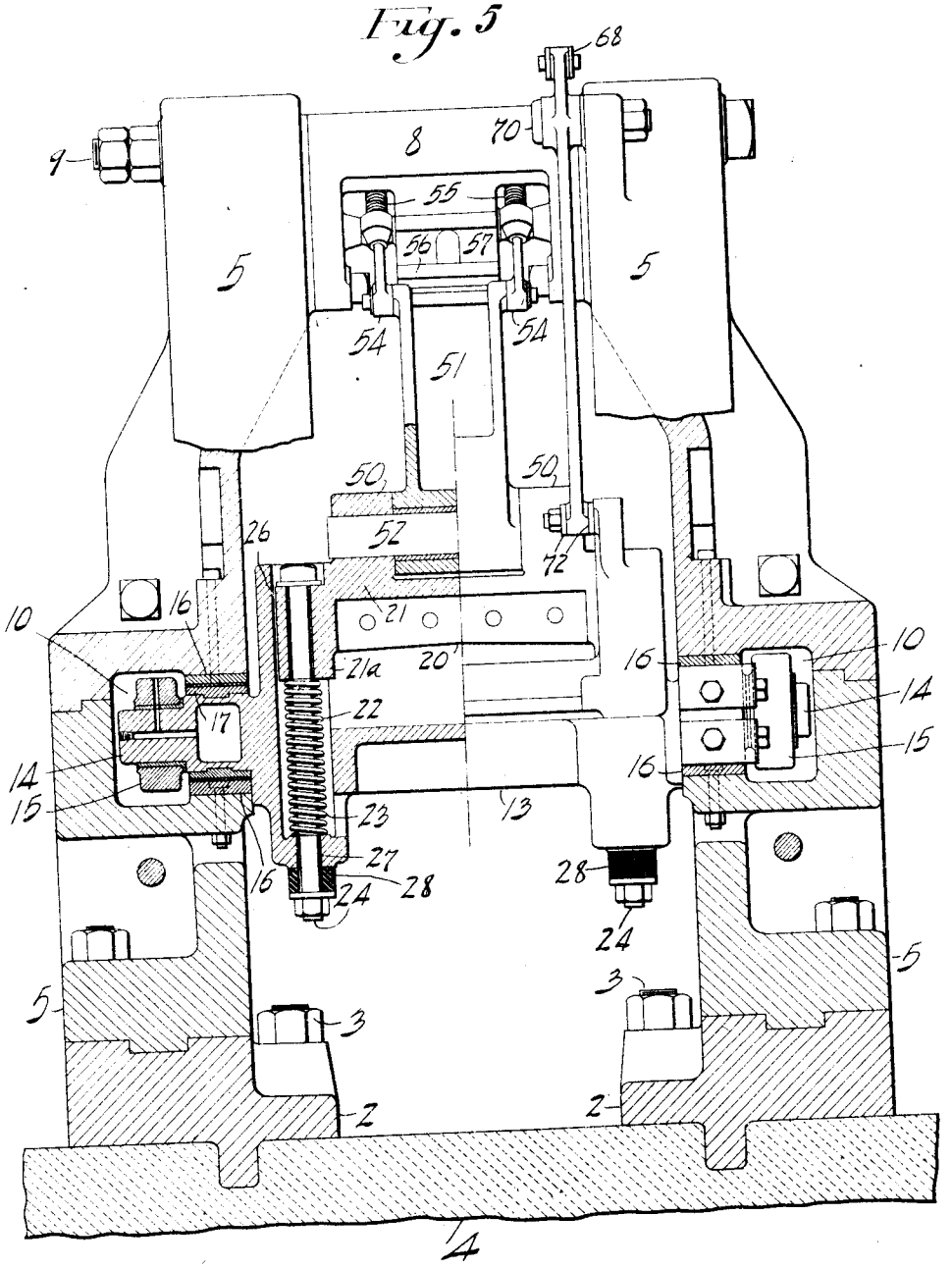

WITNESSES.

R. D. Little

G. L. Winters

INVENTOR

James Simpson.

by Smith, Dell & Fuller

his Attorneys.

J. SIMPSON.

AUTOMATIC FLYING SHEARS.

APPLICATION FILED APR. 8, 1911.

1,037,675.

Patented Sept. 3, 1912.

7 SHEETS—SHEET 5.

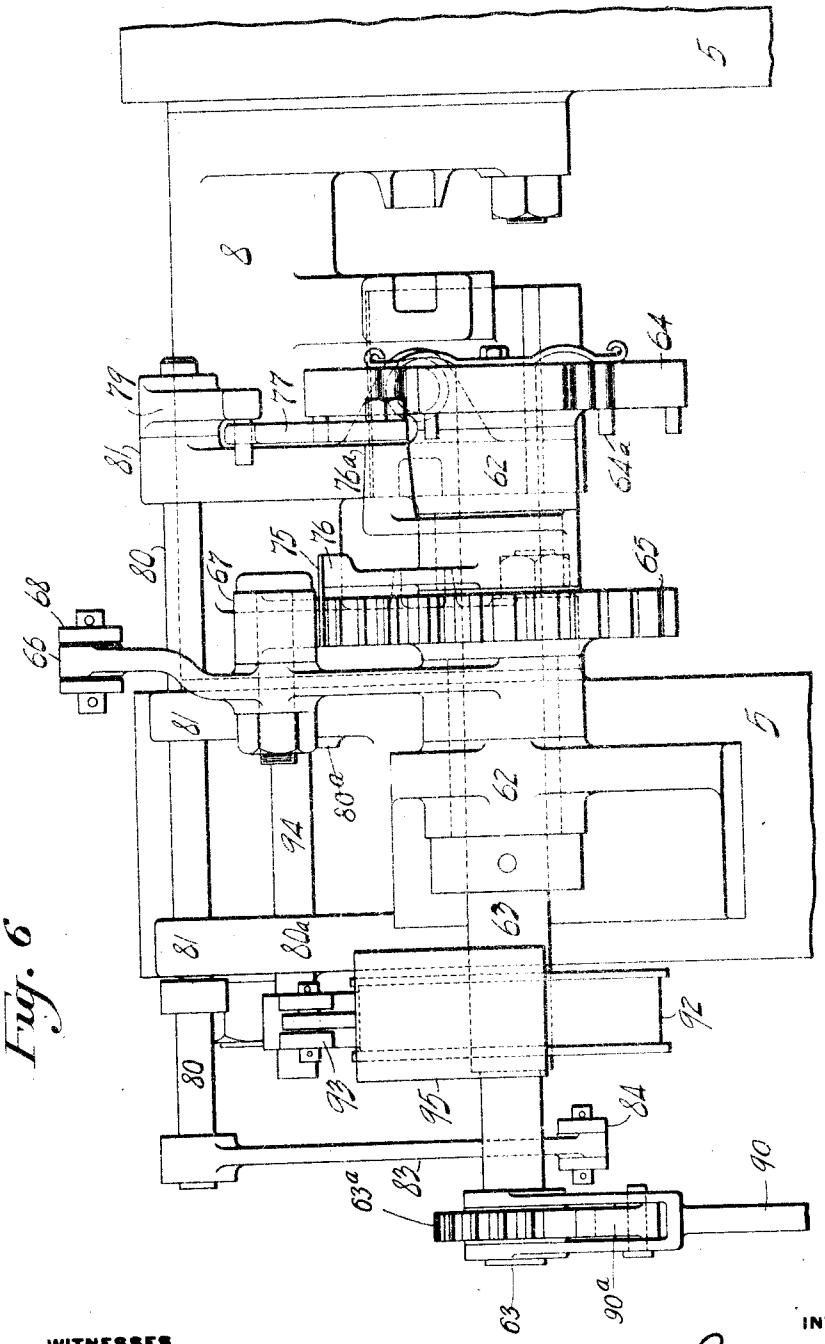

Fig. 6

WITNESSES

R. D. Little

G. L. Winters

INVENTOR

James Simpson

by Linthicum, Belt & Fuller

his Attorneys

J. SIMPSON.

AUTOMATIC FLYING SHEARS.

APPLICATION FILED APR. 8, 1911.

1,037,675.

Patented Sept. 3, 1912.

7 SHEETS—SHEET 6.

Fig. 7

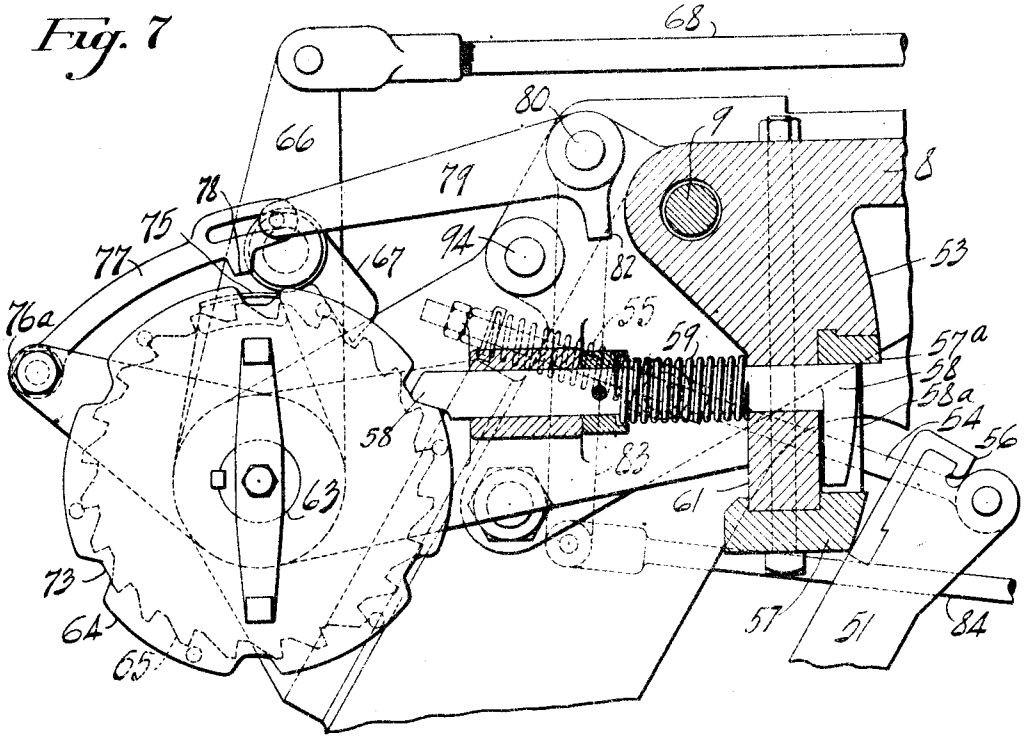

Fig. 8

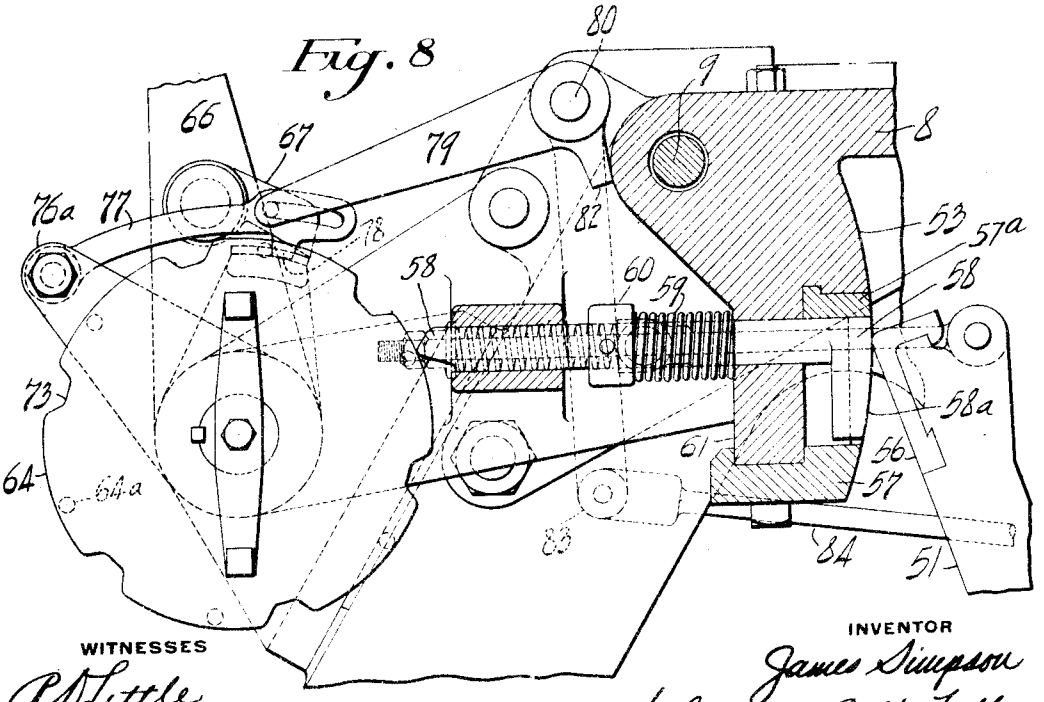

WITNESSES

R. D. Little

G. L. Winters

INVENTOR

James Simpson

by Lothrop, Bell & Fuller

his Attorneys

J. SIMPSON.

AUTOMATIC FLYING SHEARS.

APPLICATION FILED APR. 8, 1911.

1,037,675.

Patented Sept. 3, 1912.

7 SHEETS—SHEET 7.

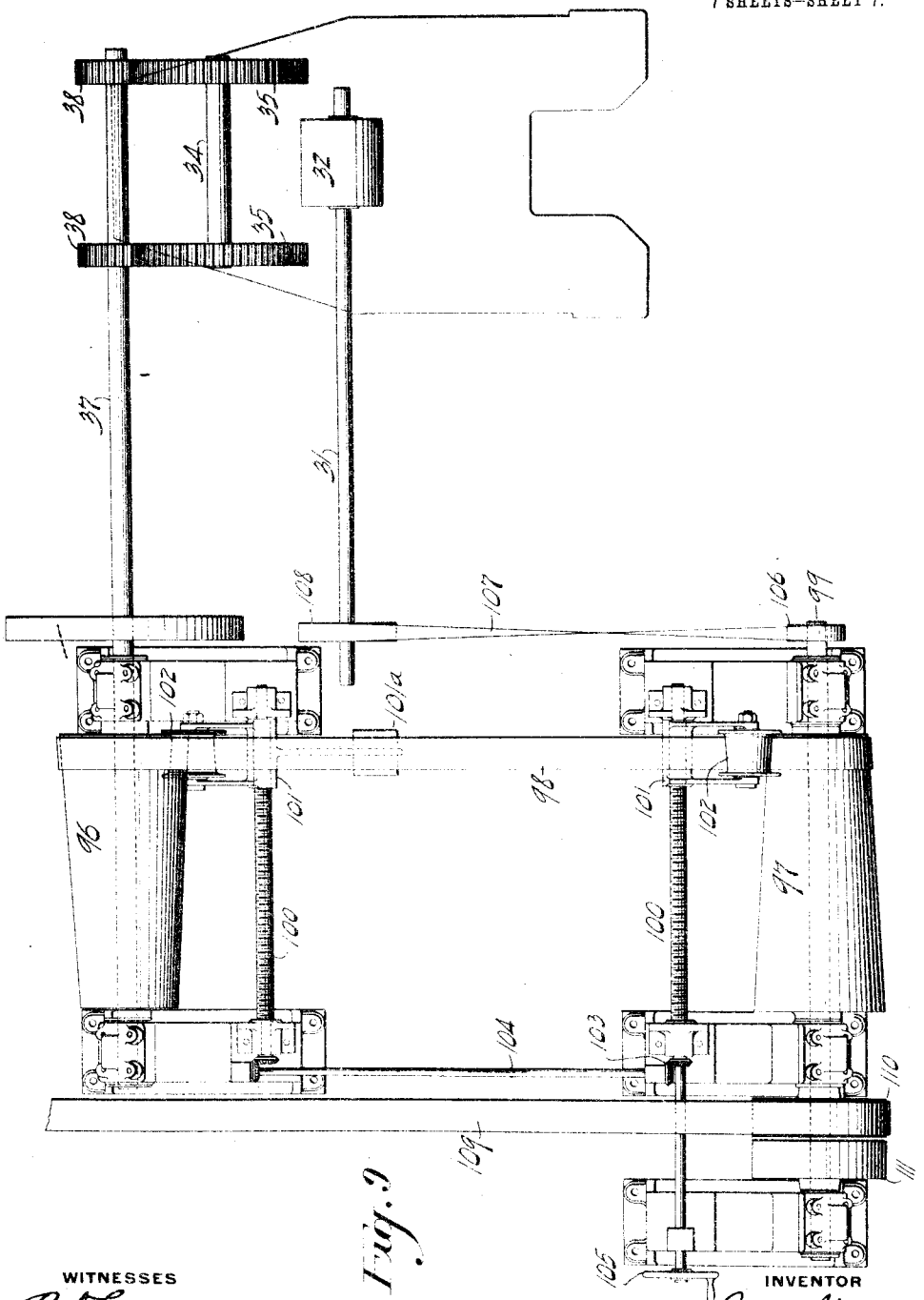

Fig. 9.

WITNESSES

R. D. Little

G. L. Winters

INVENTOR

James Simpson

by Lothrop, Beck & Fuller

his Attorneys

UNITED STATES PATENT OFFICE.

JAMES SIMPSON, OF McKEESPORT, PENNSYLVANIA, ASSIGNOR TO NATIONAL TUBE COMPANY, OF PITTSBURGH, PENNSYLVANIA, A CORPORATION OF NEW JERSEY.

AUTOMATIC FLYING SHEARS.

1,037,675. Specification of Letters Patent. Patented Sept. 3, 1912.

Application filed April 8, 1911. Serial No. 619,842.

To all whom it may concern:

Be it known that I, JAMES SIMPSON, of McKeesport, in the county of Allegheny and State of Pennsylvania, have invented a new and useful Automatic Flying Shear, of which the following is a full, clear, and exact description, reference being had to the accompanying drawings, forming part of this specification.

My invention relates to shearing apparatus used in cutting rolled metal materials such as plates, pipe skelp, bars, and other rolled shapes manufactured in rolling mills, to a pre-determined length, and more particularly relates to shearing apparatus for rapidly cutting long lengths of such materials into a series of pieces or blanks of a uniform length. In shearing the products of such rolling mills it is important and necessary that the sheared materials are cut accurately into pieces having a length which is a multiple of the total length of the materials as rolled, and an additional length sufficient for the crop ends. It is also important to shear the materials into pieces of the desired length without interfering with the continuous operation of the rolling mill. In other words, the long pieces of the product being rolled in the rolling mill should be sheared into a series of shorter pieces of uniform length and be sheared at the same rate of speed as the materials are formed or rolled in the rolling mill.

To that end, one object of my invention is to provide a flying shear mechanism having novel means for cutting a long piece of rolled material or series of such pieces into shorter pieces of pre-determined length without stopping or delaying the continuous forward movement of the materials between the knives of the shear.

Another object of the invention is to provide a shearing mechanism constructed and arranged to cut the materials into the desired number of pieces in the same interval of time as that in which the materials are rolled and are successively delivered to the shear by the delivery tables connecting the last pass of the rolls in the rolling mill with the shearing mechanism, and having improved means for changing or adjusting the cutting speed of the shearing mechanism relative to the rate of travel at which the materials are delivered to the shearing apparatus to be cut so as to enable the number of pieces into which the rolled materials are cut to be varied to suit the particular length desired without delay in the operation of the rolling mill.

Another object of this invention is to provide shearing apparatus having improved means whereby the cutting movement of the shear knives is prevented without stopping the operation of the shear knife driving mechanism when materials are not being fed between the shear knives of the apparatus and without the loss of time otherwise necessary in starting the apparatus and to provide a flying shear mechanism having improved means by which the length of the pieces into which the materials are cut is regulated and controlled.

Another object of this invention is to provide shearing mechanism for cutting such materials having novel means for actuating the shear knives to sever the materials and for regulating and adjusting the time intervals between the cutting movements of the shear knives.

A further object of my invention is to provide an improved flying shear mechanism having novel means for regulating the shearing or cutting strokes of the shear knives relative to the speed at which the multiple length rolled materials are delivered between the shear knives to vary the length of the cut materials and to control the speed of the shearing mechanism.

A further object of this invention is to provide shearing mechanism arranged to automatically shear the crop ends from the front ends of the materials without waste, as the successive blanks are delivered to the shearing mechanism.

A still further object of the invention is to provide improved means for adjusting the shear knife regulating mechanism to vary the length of the materials cut and to provide novel means for actuating the mechanism controlling the cutting movements of the shear knives.

Referring to the drawings forming part of this specification, Figure 1 is a plan showing shearing apparatus constructed and arranged and adapted for use in accordance with my invention. Fig. 2 is a longitudinal side elevation of the apparatus shown in Fig. 1. Fig. 3 is a sectional side elevation

on the line III—III of Fig. 1 showing the shear knives and knife actuating mechanism. Fig. 4 is a detail sectional side elevation, showing the controlling mechanism, engaged by the material being sheared during the shearing operations. Fig. 5 is an irregular sectional end elevation showing the connections between the cross-head and pitmen and the construction of the cross-head slides or ways. Fig. 6 is a detail end elevation showing the timing mechanism by which the shear knives are caused to move into and out of operative position at predetermined intervals. Fig. 7 is a detail sectional elevation on an enlarged scale, the section being taken on the line III—III of Fig. 1, showing the shear knife actuating mechanism and the means by which the actuating mechanism is held in its inoperative position. Fig. 8 is a similar view, showing the shear knife actuating mechanism in its operative position, and the relative position of the mechanism by which the knife actuating mechanism is held in inoperative position. Fig. 9 is a plan showing the variable speed mechanism for regulating and controlling the time intervals between which the shear knives are positively actuated through their cutting movement.

In the accompanying drawings, 2 designates the bed plate or base of the apparatus, secured by the foundation bolts 3 to the shear foundation 4 and mounted on opposite sides of the base 2 are the standards or housings 5, 5, which are fastened to the base 2 by means of the bolts 6.

The housings as shown are made in two transversely divided sections, the top and bottom sections being rigidly connected together by the bolts 7, links 11 and bolts 12, so as to be substantially integral. A spreader or separator 8 is arranged to extend between the opposite inner faces of the housings 5, the top ends of the housings being rigidly secured to the separator by means of the through-bolts 9. Each of the housings 5, 5, is provided with a recess or opening 10 which extends horizontally inward from the front face or edge of the housing upon the discharge or delivery side of the shear, the open ends of the gaps normally being closed by the straps or links 11 which are detachably secured in place by the bolts 12 so as to permit the reciprocating cross-head 13, the ends of which project through the gaps 10, being readily removed and replaced in operative position in erecting and repairing the apparatus. The ends of the reciprocating cross-head 13 are provided with wrist pins 14, 14, by which the cross-head is connected to the connecting rods or pitmen 15, 15, and the cross-head is also provided with renewable wear plates or shoes 16, 16, which contact with the slides or removable wear plates 17, 17, on the top and bottom surfaces of the gaps 10, 10, so as to form ways or slides for the cross-head 13.

Detachably secured on the cross-head 13 is the bottom shear knife 19, the movable upper or top shear knife 20 being removably secured in place on the vertically movable slide or knife support 21, which also is mounted on the cross-head 13. The slide or top shear knife support 21, which is arranged to move vertically on the cross-head 13 in causing the top shear knife 20 to move into and out of cutting engagement with the bottom shear knife 19, is provided with end portions 21^a which extend into the recesses 22, 22, in the cross-head 13, forming the slide ways or guides for the vertically movable support 21. (See Fig. 5.) Helical springs 23, 23, are interposed between the bottom or under surface of the end portions 21^a of the shear knife support 21 and the bottom of the recesses 22 in the cross-head 13 to normally hold the top shear knife support 21 and shear knife 20 in lifted position relative to the bottom shear knife 19. Bolts 24, 24, over which the springs 23 are placed, extend through the openings or holes 26, 26, in the support 21 for the top shear knife and through the openings 27, 27, in the cross-head 13 to limit the upward movement of the support 21, a rubber washer 28 preferably being provided upon each of the bolts 24, between the nuts on these bolts and the bosses on the lower face of the cross-head 13 to yieldingly oppose the thrust of the springs 23 on the support 21.

The lower section of the housings 5 which is secured upon the base or bed plate 2 is provided with integral rearward extensions 29 in which are formed the bearings 30, 30, for the shaft 31 on which the bottom pinch roller 32 is keyed or otherwise secured. The bearing 33 for the shaft 34, on the ends of which the crank disks or gears 35, 35, are secured, and the bearings 36, 36, for the driving shaft 37 on which the spur driving pinions 38, 38, are keyed or otherwise fastened, are also on the rearward extension 29, the teeth of the spur pinions 38 meshing with the spur teeth of the crank gears 35 on the driving shaft 34. The crank gears or disks 35 on the shaft 34 are provided with crank pins 39 to which one end of the connecting rods or pitmen 15 are mounted so as to operatively connect the reciprocating cross-head 13 to the rotary crank disks 35, 35, by which the cross-head is actuated when the shear mechanism is in operation. Also mounted upon the top of the rearward extension 29 of the housings 5, 5, is an apron plate 40 having upwardly extending adjustable side guards 41, 41, on opposite sides of its top surface and having a projection 42 on its under surface forming the cap portion of the crank shaft bearing

33. The apron plate 40 is provided with an opening or slot 43, through which the top of the positively driven bottom pinch roller 32 extends into proximity to the bottom of the vertically movable top or idler pinch roller 44, which is mounted on the horizontal roller shaft 45. The idler pinch roller shaft 45 which extends above and across the width of the apron plate 40 is mounted in the vertically movable bearings 46, 46, on the bearing stands 47, 47, the stands 47 being secured by the bolts 48 to the brackets 49, 49, on opposite sides of the apron plate 40.

The top or upper edge of the vertically movable shear knife support 21 is provided with lugs or bearings 50, 50, to which the rocking arm 51 is pivoted by the pin or shaft 52, and the upper end of the rocking arm 51 is held in yielding engagement with the wearing face 53 on the separator 8 by the eye bolts 54 and springs 55 on the outer ends of these bolts, as is best shown in Figs. 7 and 8. The upper end of the arm 51 is provided with a removable wearing plate 56 forming the wiping face for this arm and also forming a stop which engages with the shoulder or jog formed in the curved wiping face 53 by the hardened insert or wearing plate 57^a removably secured on the separator or spreader 8, in causing positive movement of the top shear knife 20 through its downward cutting stroke. (See Figs. 7 and 8.)

Located in the recess formed in the wiping face of the separator 8 by the opposite horizontal faces of the removable plates 57, and 57^a, is the vertically extending wiping face 58^a on one end of the horizontally movable trigger 58. This face 58^a, in one position, (that shown in Fig. 8) forms a continuation of the curved wiping face 53 by which the upper end of the rocking arm 51 is held out of operative engagement with the shoulder or jog formed on the separator 8 by the hardened insert or plate 57^a when the trigger 58 is retracted. The face 58^a on the trigger 58, when retracted by the spring 59, (into the position shown by Fig. 7) permits the wearing plate 56 secured on the upper end of the rocking arm 51 to operatively engage with the shoulder or jog formed by the insert 57^a on the separator. When in such position, the rocking arm 51, during the first part of the next forward movement of the cross head 13 causes a positive downward movement of the top shear knife 20 and its support 21 on the cross-head 13 toward the bottom shear knife 19 through the cutting stroke of the knife 20. During the last part of the same forward movement of the cross-head 13 the vertically extending wiping face of the wearing plate 56 on the rocking arm 51 contacts with the wiping face of the wearing plate 57 and causes the surface of the wearing plate 56 which forms the stop, to disengage from the shoulder or jog formed by the insert 57^a so as to thereby release the rocker arm 51, which arm is then lifted together with the knife support 21 and knife 20 by the springs 23, the wiping face 53 of the separator 8 having meanwhile been made continuous by the return of the wiping face 58^a on the movable trigger 58 into the position shown in Fig. 8.

The helical spring 59 on the trigger 58 is interposed between a removable collar 60 on the trigger and one face of the recess or opening in the separator formed by the boss or lug 61 through which the outer end of the trigger extends, so as to normally hold the trigger 58 and its wiping face in the retracted position shown by Fig. 7.

Mounted in the bearings 62, 62, which are secured to the housings 5 and separator 8 on the front or discharge side of the shear, is a horizontal shaft 63 having removably secured on one end thereof a detachable timing disk 64 by which intervals between the cutting strokes of the shear knives are regulated and controlled. Keyed or otherwise secured on the shaft 63 is a ratchet wheel 65, and loosely mounted on the shaft 63 is a ratchet lever 66 having a pawl 67 which is arranged to engage with the teeth of the ratchet wheel 65 and rotate the ratchet wheel 65 and shaft 63 by a step-by-step movement when the ratchet arm or lever 66 is rocked or oscillated. Connected to the upper end of the ratchet lever 66 by the reach-rod or link 68 is the upper end of the arm or lever 69, this arm being pivoted at an intermediate point in its length by the pin 70 to the lug 71 on the top of one of the housings 5. The lower end of the lever or arm 69 is pivotally connected by the link 72 to the horizontally movable cross-head 13 so as to actuate the ratchet lever 66 when the lever 69 is rocked by the reciprocating movements of the cross-head, and, by a step-by-step movement rotate the shaft 63 and timing disk 64, so as to successively bring the recesses or notches 73 on the periphery of the timing disk 64 opposite the end of the trigger 58 and cause the trigger 58 to be retracted to form the bottom surface of a gap or recess in the wiping face on the separator, (the position shown in Figs. 3 and 7), and, on the next forward movement of the cross-head cause the shear knives to operatively approach through the cutting movement of these knives.

A guard or shield 75 adapted to be moved into and out of the path of movement of the rachet pawl 67 on the ratchet lever 66 is provided to prevent engagement of the pawl with the teeth of the ratchet wheel when interposed between the end of the pawl 67 and the periphery of the ratchet wheel 65. The shield 75 is secured on the upper end of one arm 76 of the double lever

which is loosely mounted so as to rock on the ratchet shaft 63. The upper end of the other arm 76ª of the lever 76 is connected to one end of the link 77 having a projection 78 on its lower edge and having its opposite end connected to the free end of the rocking arm 79. The rocking arm 79 is secured on one end of the rocking shaft 80, which is mounted in the lugs 81, 81, on the front face of the housings 5 and separator 8, and a stop 82 is provided on the lever 79, which by engagement with the face of the separator 8 limits, in one direction, the rocking movement of the shaft. On the opposite end of the shaft 80 is a lever 83, the lower end of which is operatively connected by the link or rod 84 to the lever 85 which is secured on one end of the shaft 86 mounted in bearings secured on the apron plate 88, and on which shaft the counterweighted lever 89 is secured, this lever being adapted, while depressed by a piece of material passing to the shear, to hold the shield 75 in inoperative position and when released permitting the link 77 on the lever 76ª to be lowered to bring the shield 75 into position to prevent further movement of the ratchet wheel 65 by the ratchet pawl 67.

Secured on the brake wheel end of the shaft 63 is a ratchet wheel 63ª and a ratchet lever 90 is also mounted on the shaft 63 having a pawl 90ª arranged to operatively engage with the teeth in the ratchet wheel 63ª and when necessary rotate the shaft 63 and disk 64 to adjust or vary the time intervals between any two cutting strokes of the shear knives, and to adjust the position of the timing disk 64 on the shearing mechanism after placing a new disk on the disk shaft 63.

The periphery of the disk 64 is provided with a series of notches or depressions 73 spaced at regular intervals and one end of the trigger 58 having the wiping face 58ª is adapted to enter these depressions when not engaging with the periphery of the disks between the depressions. The particular disk 64 shown in the drawings is provided with six equally spaced notches 73 in its periphery so that when the end of the trigger 58 enters one of these notches 73, the wiping face 58ª on the other end of the trigger is retracted by the action of the spring 59 and the end of the arm 51 is permitted to engage the shoulder formed by the insert 57ª on the separator 8 and cause the top shear knife 20 on the cross-head 13 to positively move through its cutting stroke six times in one revolution of the disk 64. A series of such disks, each having a different number of notches in its periphery are provided and, by placing different ones of the various disks on the shaft 63 the number of times the movable top shear knife is positively actuated in one revolution of the disk 64 is changed and in this way the length or number of pieces into which the rolled material is cut is varied. The trigger 58 by engagement with the periphery of the disk between the notches is moved horizontally so as to shift the position of the wiping face 58ª of this trigger from its position, (that shown in Fig. 7), in which engagement between the wearing faces 56 and 57ª is permitted, into its wiping position, (that shown in Fig. 8) by which the wearing face 56 is held out of engagement with the shoulder or stop formed on the separator 8 by the wearing face or insert 57ª and positive movement of the upper shear knife toward the lower knife through the cutting stroke of the knives is prevented.

The timing disks 64 are provided on one face with a series of equally spaced projecting pins, the number of pins in the disks equaling the number of depressions or notches 73 in the periphery of the disks, these pins being provided to engage with the projection 78 on the end of the link 77, so as to lift this link and, through the connecting gear, shift the guard 75 into its operative position. The pins are positioned relative to the notches in the periphery of the disks in such manner that the guard 75 is moved into position between the ratchet pawl 67 and the teeth of the ratchet wheel, so that when retracted, on the first movement of the ratchet wheel 65 by the pawl, a notch in the timing disk will be brought opposite the end of the trigger 58 so as to permit the trigger to be retracted and on the next forward movement of the cross-head, cause the shear knives to be positively moved toward each other through their cutting stroke. In this way the front end of the successive blanks are cut off or cropped, with a minimum waste of material.

A brake wheel 92 on the shaft 63 is adapted to be engaged by the friction face of the lever 93 which is pivoted by one end to the shaft 94 which is mounted in holes or bearings in the lugs 80ª on the housing 5 provided to prevent rotation of the shaft 63 by friction, the counterweight 95 on the free end of the lever 93 holding the lever 93 in engagement with the brake wheel 92 so as to prevent rotation of the ratchet wheel 65 and shaft 63, except when positively actuated by the ratchet pawl 67 on the lever 66.

It is frequently found necessary or desirable to change the rate of speed at which the shear is operated relative to that at which the rolling mill is being operated, to vary slightly the length of the pieces into which the multiple length materials are cut, the driving belt preferably being connected to the driving motor for the bull head or finishing stand of rolls in the rolling mill and the gears being proportioned to suit the relative speeds of operation of the rolling mill

and shear. The oppositely facing cone pulleys 96 and 97 which are connected by the belt 98 to form a variable speed driving mechanism are employed to vary the speed of operation of the shear relative to the speed of the driving shaft 99 on which one of the cone pulleys is mounted, and a belt shifter is provided, which, as shown, consists of parallel screws 100, 100, having mounted thereon screw threaded supports 101 on which idler wheels or pulleys 102 are secured which engage with the top and bottom side of the belt 98. The idler pulley 102 which engages with the under side of the belt 98 is yieldingly held in engagement with the belt by the counterweight 101ª on one end of the pulley support 101 mounted in the screw 100. The screws 100, 100, are connected together so as to operate in unison by means of the bevel gears 103 and connecting shaft 104 and a suitable hand wheel 105 is secured on the end of one of the screws or shafts 100 so as to operate the belt shifting device to change the position of the belt 98 on the cone pulleys 96 and 97 to vary the speed of the driven mechanism.

It will be found desirable in cutting some classes or sizes of materials requiring frequent adjustments of the position of the belt 98 on the cone pulleys 96 and 97 to replace the hand wheel 105 with a gear meshing with a similar gear on the armature shaft of a small electric motor and locate the controller for this motor in position to be operated by the person controlling the operation of the feed table delivering material to the shear to be sheared.

On one end of the driving shaft 99 is a driving pulley 106 which is connected by means of a cross belt 107 with a pulley 108 mounted on one end of the shaft 31 by which the bottom pinch roller 32 is positively rotated.

With my improved apparatus, approach of the shear knives into cutting engagement is prevented when materials are not being delivered to the shear, without stoppage in the operation of the shear driving mechanism, the driving mechanism being permitted ordinarily to operate while the rolling mill is being operated, so as to reciprocate the cross-head, in order to prevent any delay in again starting and stopping the shearing operations. For this reason, the pivoted lever 89 having its front end extending upwardly through an opening in the bottom of the apron plate 88 is pivoted to the apron plate and a counterweight 88ª is also provided to normally hold the outer end of the lever 89 in the upward position shown dotted in Fig. 4.

The operation of my improved apparatus is as follows: The proper timing disk 64 to cut the metal blanks into pieces of the desired length, is placed in position on the ratchet shaft 63 and the belt 109 is shifted from the loose pulley 111 to the fast pulley 110 on the cone pulley shaft 99 so as to start the variable speed driving pulleys 96, 97, in operation, and, through the connecting mechanism, cause the cross-head 13 to reciprocate on the ways or slides 16, 17, and the friction rollers 32, 44, to rotate. When desired, the ratchet pawl guard 75 may be manually moved into and held in its retracted position by means of the lever 83 so as to permit the ratchet pawl 67 to actuate the ratchet wheel 65 and shaft 63 to move the timing disk 64 and bring a notch 73 in the periphery of this disk into such position relative to the end of the trigger 58 that on the next rocking movement of the ratchet lever 66 a notch 73 on the disk 64 will be brought opposite the end of the trigger. The trigger 58 then moves into the position shown in Figs. 3 and 7 by the force of the spring 59, so as to retract the wiping face 58ª on the other end of the trigger 58 from the position shown in Fig. 8 to form a gap in the wiping face on the separator 8, (as is shown in Figs. 3 and 7). The parts are then in position to actuate the upper vertically movable shear knife through its cutting stroke into cutting engagement with the bottom shear knife when the ratchet lever 66 is rocked once more, and again move the ratchet wheel 65 and bring the notch 73 in the disk 64 opposite the end of the trigger 58 into the position shown by Figs. 3 and 7. Preferably, however, the timing disk 64 is more quickly moved to bring a notch in its periphery into the desired position relative to the trigger 58 by means of the "booster" formed by the ratchet wheel 63ª and ratchet lever 90 and pawl 90ª. When a multiple length blank delivered on the feed table from the bull head rolls approaches the shear, the forward end of this blank first engages with and depresses the projecting end of the pivoted lever 89 on the apron plate 88. This lever, through the shaft 86, arm 85, and link 84, moves the arm 83, and through the shaft 80 the arm 79, so as to shift the guard 75 from its operative position (shown in Fig. 8) into its inoperative position (that shown in Fig. 7) and permit the free end of the pawl 67 on the ratchet lever 66 to engage with the teeth of the ratchet wheel 65. The next forward movement of the cross-head 13 which is constantly reciprocated, moves the ratchet wheel 65 through the lever 69, reach rod 68 and lever 66, and through the shaft 63 the timing disk 64 into position so as to permit the spring 59 to move the trigger 58, into the position shown in Figs. 3 and 7. It should be stated that, as shown in Fig. 3, the cross-head 13 is at its extreme limit of forward travel and that the upper end of the arm 51 is in its lowest position, traveling

upward on the wiping face of the separator 8 into the position shown in Fig. 8, during the backward or left to right stroke of the cross-head. On the next forward stroke of the cross-head, (from right to left in Fig. 3) the wearing plate 56 on the end of the arm 51 enters the gap then in the wiping face on the separator 8 as shown in Fig. 7, and engages with the shoulder formed by the wearing plate 57ª on the separator 8. On the continuation of this forward stroke of the cross-head the top shear knife 20 is forced downwardly into cutting engagement with the bottom knife 19 so as to sever a plate or other shape between the shear knives.

As long as a plate or bar is passing over the apron plate so as to engage with and keep the free end of the lever 89 in its depressed position (that shown by full lines in Fig. 4) the lever 79 will hold the link or latch 77 in its lifted position (that shown in Fig. 7) and maintain the guard 75 in its inoperative position so as to permit the ratchet pawl to engage with and rotate the ratchet wheel 65. After a cutting stroke of the movable shear knife at the beginning of the next forward movement of the cross-head, the cross-head, through the ratchet connections actuates the ratchet wheel so as to move the timing disk 64 to shift the trigger 58 into the position shown in Fig. 8, in which position it remains until continued reciprocations of the cross-head rotate the timing disk sufficiently to bring the next notch in the periphery of the disk opposite to the end of the trigger 58 and permit the trigger 58 and wiping face 58ª on its one end to again be retracted, and again cause a cutting movement of the top shear knife. During the interval in which the timing disk is being rotated through an arc equal to the angle included between the notches 73 in the disks, the metal is being rapidly delivered endwise between the shear knives by the pinch rollers 32, 44, so that when again actuated the shear knives will be caused to cut off a piece of the desired length from the long rolled blank. The approximate length into which the materials are successively cut is determined by the number of notches in the timing disks and to get the exact length desired the variable speed driving mechanism formed by the cone pulleys 96, 97, is adjusted so as to change the relative speeds of the shear mechanism and the feeding device formed by the pinch rollers. After the rear end of a blank being sheared has passed beyond the projecting upper end of the lever 89 located in the opening through the bottom of the apron plate 88 this lever will be lifted by the counterweight 88ª and through the connecting lever arms and rods will permit the forward end of the latch 77 to again assume the depressed position shown in Fig. 8. The cross-head being still reciprocated continues through the lever 69 and connections to rotate the ratchet wheel and through the ratchet shaft 63 the timing disk 64. As the disk 64 is rotated one of the pins 64ª projecting from the side of the disk engages with the projection 78 on the swinging end of the latch 77 and after engaging with the latch on the next movement of the ratchet wheel, moves the latch 77 and through the latch the guard 75 into the operative position of the guard between the teeth of the ratchet wheel 65 and the pawl 67 so as to prevent further movement of the ratchet wheel by the ratchet pawl 67 until the guard is thrown back into its inoperative position. The cross-head 13 then continues to reciprocate without cutting movement of the shear knives until after the latch 77 has been lifted by the lever 79 into the position shown in Fig. 7. This lifting movement of the latch is effected by the next rolled plate delivered to the shear when the forward end of the plate engages with and again depresses the end of the lever 89 in the bottom of the apron plate 88 which is located on the rear receiving side of the shear mechanism. The above operations are then repeated as required.

The advantages of my invention will be apparent to those skilled in the art. The apparatus is simple and is easily kept in repair. By its use a long rolled metal plate or other shape is quickly and accurately cut into a plurality of equal lengths without stopping or delaying the forward movement of the material being cut. The length into which the materials are cut is readily changed, and variations in the length cut quickly adjusted without interruption to the shearing operations.

Modifications in the construction and arrangement of the parts may be made without departing from my invention as defined in the appended claims.

I claim:—

1. In a flying shear a pair of opposed relatively movable shear knives, a movable shear knife support upon which said knives are mounted having mechanism to cause a relative approach of the knives during forward movements of said support, means for positively moving the support, and means whereby relative approach of the shear knives during forward movements of said support is prevented.

2. In a flying shear a pair of opposed relatively movable shear knives, a reciprocating support upon which said shear knives are mounted, means for reciprocating said support to cause relative approach of the knives thereon, and means coacting with said support to prevent relative movement of the shear knives during at least part of

the reciprocating movements of said support.

3. In a flying shear a pair of shear knives relatively movable vertically, a horizontally movable shear knife support upon which said knives are mounted, means for moving the support to actuate the knives, and means coöperating with said support to permit horizontal movement of the support without relative vertical movement of said shear knives.

4. In a flying shear, a pair of opposed relatively movable shear knives, a reciprocating support therefor, means for reciprocating the support without relative movement of the shear knives mounted thereon and mechanism for causing a relative approach of the shear knives to sever materials between the knives at intervals in the reciprocatory movements of said shear knife support.

5. Shearing mechanism comprising opposed relatively movable shear knives, a reciprocating support therefor, means for causing relative approach of said knives on the knife support in severing materials located between the knives and means for timing the intervals between the severing movements of said knives.

6. Shearing mechanism comprising opposed relatively movable shear knives, means for causing relative approach of said knives in cutting, controlling mechanism for regulating the intervals between the cutting movements of said knives, means for delivering material to be cut into position between the shear knives, and mechanism engaging with the uncut material in the rear of the shear knives arranged to maintain the controlling mechanism in operative position.

7. Shearing mechanism comprising opposed relatively movable shear knives, means for causing relative approach of said knives in cutting, controlling mechanism for regulating the intervals between the cutting movements of said knives, means for delivering material to be cut into oposition between the shear knives, and mechanism engaging with the uncut material in the rear of the shear knives arranged to maintain the controlling mechanism in operative position when said material engaging mechanism is in contact with the materials being cut.

8. A shearing mechanism comprising opposed relatively movable shear knives, means for causing relative approach of said knives in cutting material located between the knives, mechanism for timing the intervals between the cutting movement of said knives, means for delivering material to be cut into position between the shear knives, means engaging with the material being cut arranged to maintain the timing mechanism in operative position, and means for changing the rate of feed of materials between the shear knives relative to the cutting movements of said shear knives to vary the length of the pieces into which the materials are severed.

9. A shearing mechanism comprising opposed relatively movable shear knives, means for causing relative approach of said knives in cutting material between the shear knives, means for timing the intervals between the cutting movements of said knives, and mechanism operatively engaged by the material in the rear of the shear knives while being cut arranged to stop cutting movements of the shear knives while the material to be cut is being moved into position between the shear knives.

10. Shearing mechanism comprising a cross-head having opposed shear knives mounted thereon, means for reciprocating the cross-head to cause relative approach of said knives in severing material between said knives, and mechanism arranged to prevent relative movement of said shear knives while said cross-head is being reciprocated.

11. Shearing mechanism comprising a cross-head having opposed shear knives mounted thereon, means for reciprocating thec ross-head to cause a relative approach of said shear knives in severing material and mechanism arranged to permit the reciprocating movement without relative movement toward each other of said shear knives.

12. A shear comprising opposing shear knives relatively movable toward and away from each other, a horizontally movable cross-head on which said shear knives are mounted, means for reciprocating said cross-head, means for intermittently causing a relative approach of said shear knives when said cross-head is moved horizontally in one direction, and independent means arranged to retract the shear knives when the cross-head is moved in the opposite direction.

13. A shear comprising opposing knives having a relative vertical cutting movement, a horizontally reciprocating support on which said knives are mounted to move therewith, means for causing a relative approach of said knives when the knife support is reciprocated, means for reciprocating said support, and means for preventing relative approach of the knives at intervals while said support is being reciprocated.

14. In a flying shear a pair of opposed relatively movable shear knives, a reciprocating support therefor, means for reciprocating said support without causing a relative approach of the shear knives, mechanism for causing a relative approach of said shear knives when the knife support is reciprocated in severihg material between said knives and means for regulating the inter-

vals between cutting movements of said knives to regulate the cut length of the material.

15. In a flying shear a pair of opposed relatively movable shear knives, a reciprocating support therefor, means for reciprocating said support without causing a relative approach of the shear knives, mechanism for causing a relative approach of said shear knives when the knife support is reciprocated in severing material between said knives and means for regulating the intervals between cutting movements of said knives to regulate the cut length of the material. ...gulating means ...g removable to permit change in the length into which the material is cut.

16. In a flying shear, a reciprocating cross-head, means for reciprocating said cross-head, a fixed shear knife mounted on said cross-head, a shear knife support movably mounted on the cross-head, a knife actuating arm pivotally secured on the support, and a stop engaging with one end of said arm to move the shear knife support and movable shear knife to sever material between the shear knives when said cross-head is reciprocated.

17. In a flying shear, a reciprocating cross-head, means for reciprocating said cross-head, a fixed shear knife mounted on said cross-head, a shear knife support movably mounted on the cross-head, a knife actuating arm pivotally secured on the support, and a stop engaging with one end of said arm to move the shear knife support and movable shear knife to sever material between the shear knives on the forward movement of said cross-head.

18. In a flying shear, a reciprocating cross-head, means for reciprocating said cross-head, a fixed shear knife mounted on said cross head, a shear knife support movably mounted on the cross-head, a knife actuating arm pivotally secured on the support, a stop engaging with one end of said arm to move the shear knife support and movable shear knife to sever material between the shear knives, said stop having a movable wiping face contacting with the one end of the arm, and means for moving said wiping face to prevent operative engagement of the arm with said stop.

19. In a flying shear, a reciprocating cross-head, means for reciprocating said cross-head, a fixed shear knife mounted on said cross-head, a shear knife support movably mounted on the cross-head, a knife actuating arm pivotally secured on the support, a stop engaging with one end of said arm to move the shear knife support and movable shear knife to sever material between the shear knives, said stop having a movable wiping face contacting with the one end of the arm, and means for moving said wiping face to prevent operative engagement of the arm with said stop at pre-determined intervals.

20. In a flying shear, a reciprocating cross head, means for reciprocating said cross-head, a fixed shear knife mounted on said cross-head, a shear knife support movably mounted on the cross-head, a knife actuating arm pivotally secured on the support, a stop engaging with one end of said arm to move the shear knife support and movable shear knife to sever material between the shear knives, said stop having a movable wiping face contacting with the one end of the arm, and means for moving said wiping face to prevent operative engagement of the arm with said stop, for pre-determined periods of time.

21. In a flying shear, a reciprocating cross-head, means for reciprocating said cross-head, a fixed shear knife mounted on said cross head, a shear knife support movably mounted on the cross-head, a knife actuating arm pivotally secured on the support, a stop engaging with one end of said arm to move the shear knife support and movable shear knife to sever material between the shear knives, said stop having a movable wiping face contacting with the one end of the arm, means for moving said wiping face to prevent operative engagement of the arm with said stop and means for yieldingly holding said arm in engagement with said wiping face.

22. In a flying shear, a reciprocating cross-head, means for reciprocating said cross-head, a fixed shear knife mounted on said cross-head, a shear knife support movably mounted on the cross-head, a knife actuating arm pivotally secured on the support, a stop engaging with one end of said arm to move the shear knife support and movable shear knife to sever material between the shear knives, said stop having a movab ...wiping face contacting with one end of the arm, means for moving said wiping face to prevent operative engagement of the arm with said stop for predetermined periods of time, and means for starting the cutting operations upon the successive pieces of material delivered to the shear.

23. Apparatus for shearing comprising opposing shear knives, means for causing relative approach of said knives in severing materials between the knives, mechanism controlling successive cutting movements of said knives, means for delivering materials between said shear knives and mechanism for regulating the cutting movement of said shear knives relative to the speed at which materials are delivered to the shear to vary the cut length of the materials, said several means and mechanisms being arranged to operaate without interruption in the delivery of materials to the shear knives.

24. Apparatus for shearing comprising

opposing shear knives, means for causing relative approach of said knives in severing materials between the knives, mechanism controlling successive cutting movements of said knives, means for delivering materials between said shear knives and mechanism for regulating the cutting movement of said shear knives relative to the speed at which materials are delivered to the shear to vary the cut length of the materials, said several means and mechanisms being arranged to operate without delay in the forward movement of material being sheared.

In testimony whereof, I have hereunto set my hand.

JAMES SIMPSON.

Witnesses:
JAS. P. DAVIS,
RALPH E. PORTER.