E. J. VON PEIN.
PRINTING CASH REGISTER.
APPLICATION FILED NOV. 21, 1910.

1,115,626.

Patented Nov. 3, 1914.
4 SHEETS—SHEET 1.

FIG. 2.

FIG. 1.

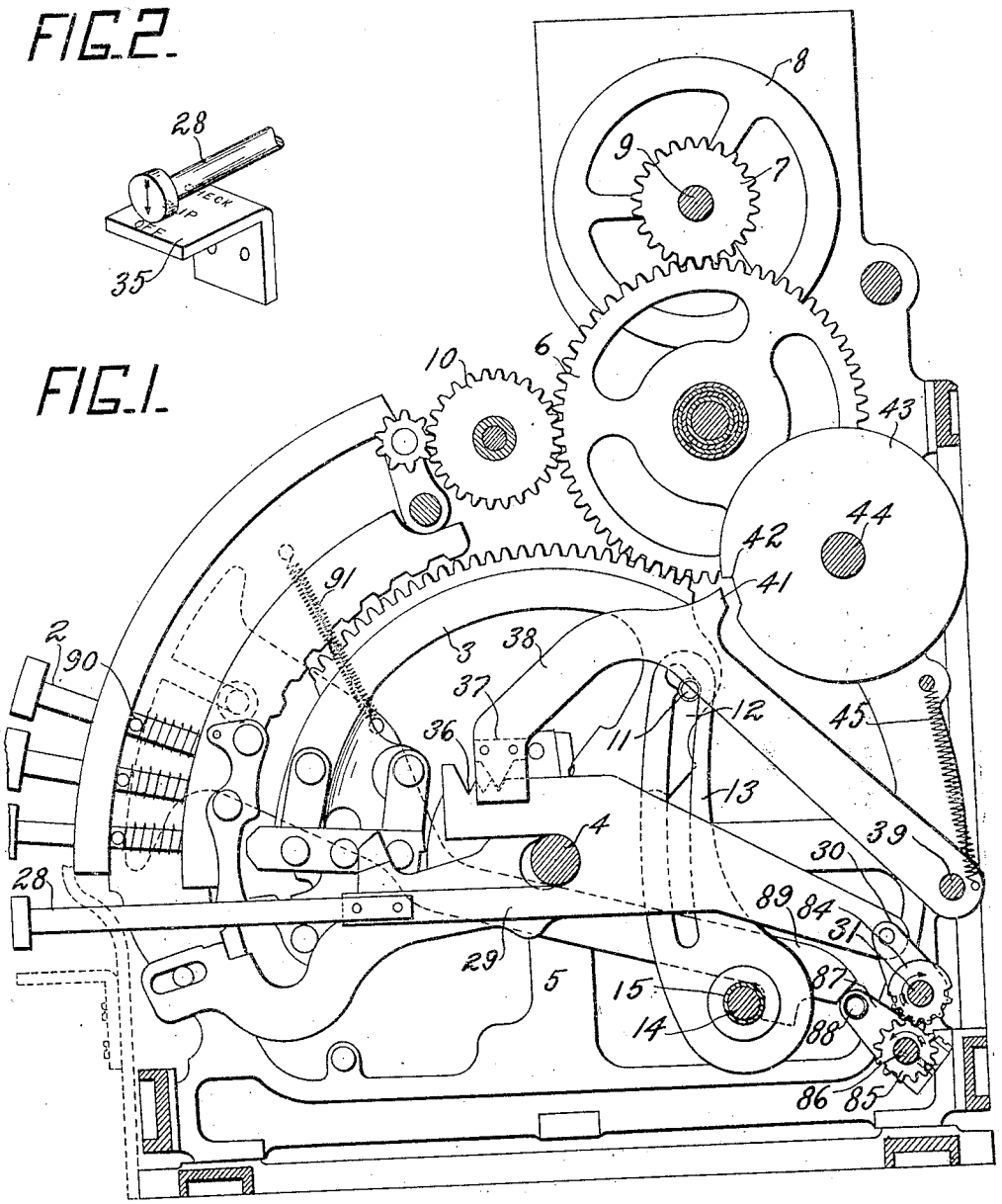

FIG. 3.

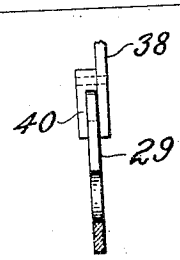

Witnesses
H. F. Sadgebury
W. M. McCarthy

Inventor
Edward J. Von Pein
By [signature]
and R. C. Glass
Attorneys

E. J. VON PEIN.

PRINTING CASH REGISTER.

APPLICATION FILED NOV. 21, 1910.

1,115,626.

Patented Nov. 3, 1914

4 SHEETS—SHEET 2.

FIG. 4.

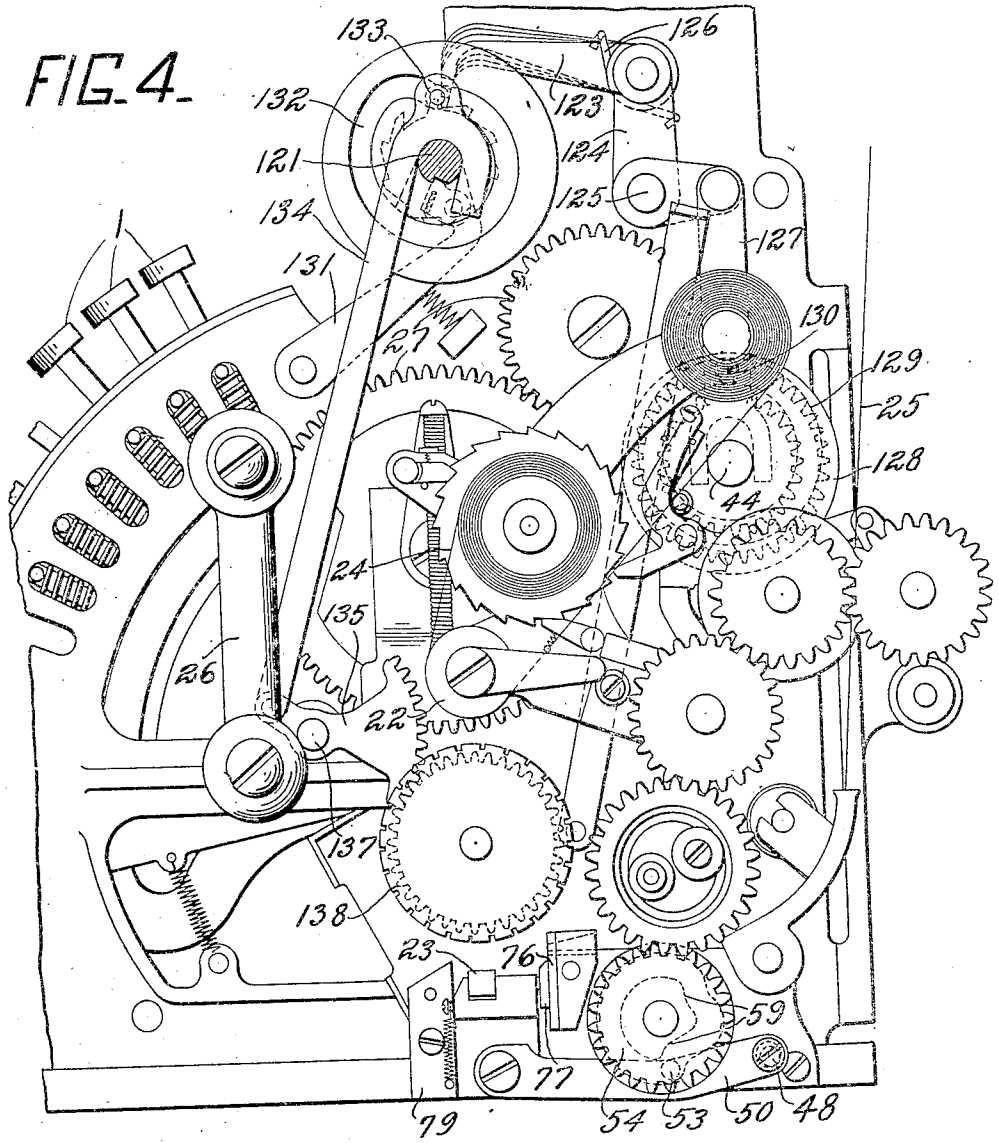

FIG. 5.

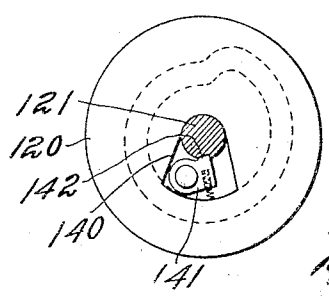

Witnesses

H. F. Sadgebury

W. M. McCarthy

Inventor

Edward J. Von Pein

By [illegible]

and R. C. Lass

Attorneys

E. J. VON PEIN.
PRINTING CASH REGISTER.
APPLICATION FILED NOV. 21, 1910.

1,115,626.

Patented Nov. 3, 1914
4 SHEETS—SHEET 3.

FIG. 6.

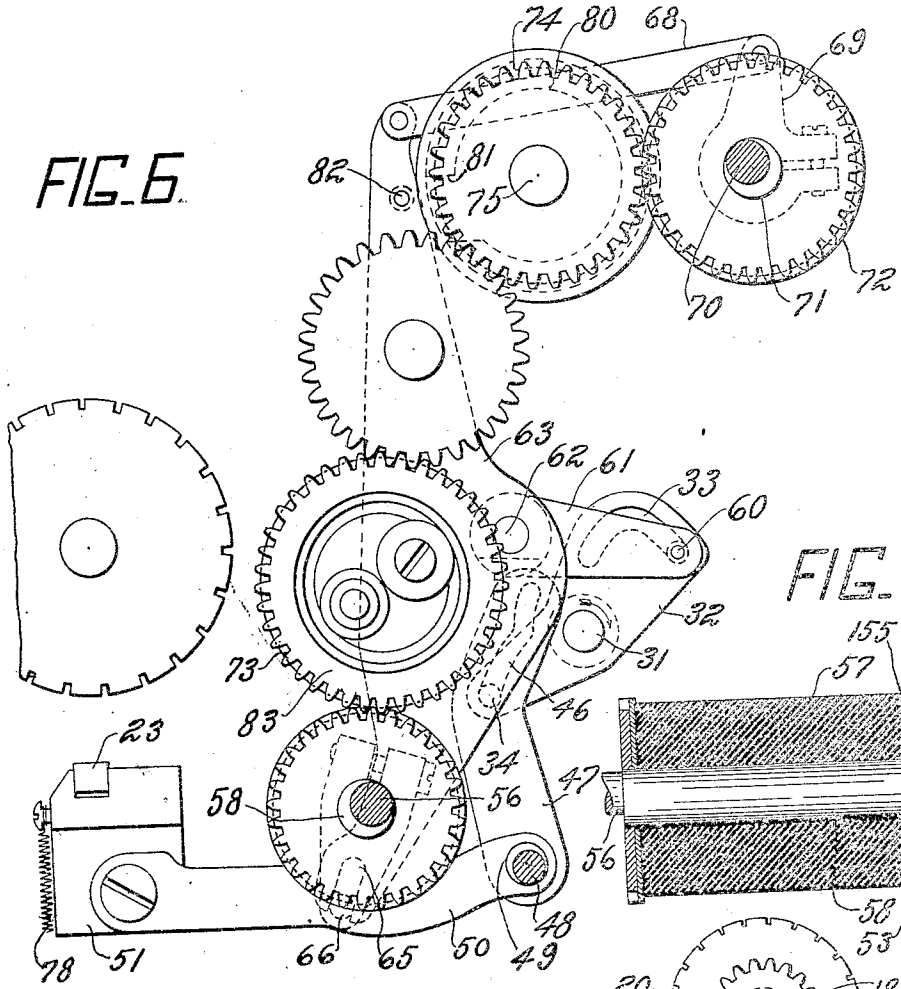

FIG. 7.

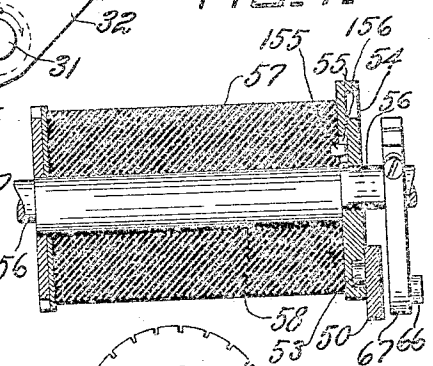

FIG. 8.

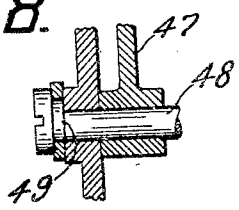

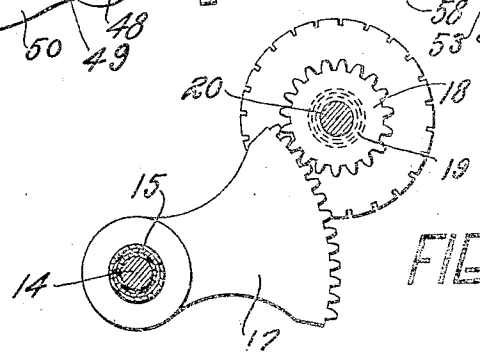

FIG. 9.

Witnesses
H. F. Sadgrbury
W. M. McCarthy

Inventor
Edward J. Von Pein,
By [illegible]
and R. C. [illegible]
Attorneys

E. J. VON PEIN.

PRINTING CASH REGISTER.

APPLICATION FILED NOV. 21, 1910.

1,115,626.

Patented Nov. 3, 1914.

4 SHEETS—SHEET 4.

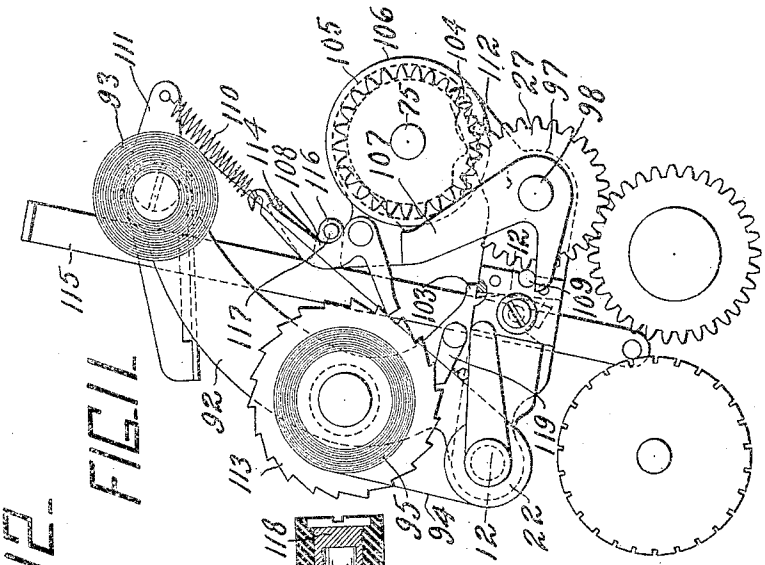

FIG. 11.

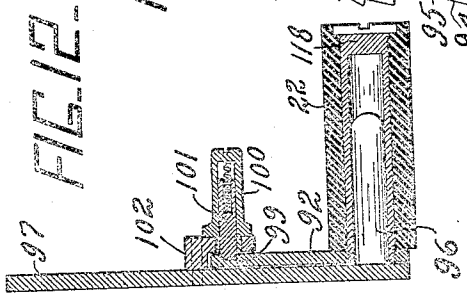

FIG. 12.

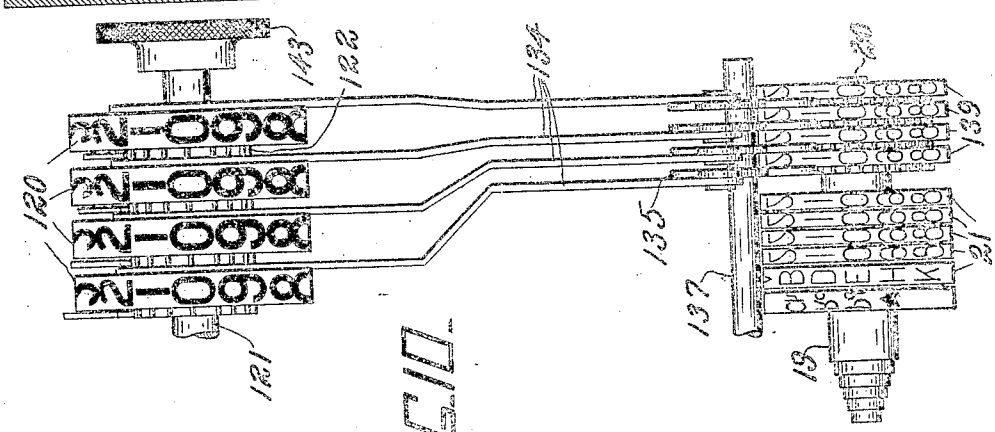

FIG. 10.

Witnesses

H. F. Sadgebury

W. M. McCarthy

Inventor

Edward J. Von Pein

By [illegible]

and R. Chase

Attorneys

UNITED STATES PATENT OFFICE.

EDWARD J. VON PEIN, OF DAYTON, OHIO, ASSIGNOR TO THE NATIONAL CASH REGISTER COMPANY, OF DAYTON, OHIO, A CORPORATION OF OHIO, (INCORPORATED IN 1906.)

PRINTING CASH-REGISTER.

1,115,626. Specification of Letters Patent. Patented Nov. 3, 1914.

Application filed November 21, 1910. Serial No. 593,371.

To all whom it may concern:

Be it known that I, EDWARD J. VON PEIN, a citizen of the United States, residing at Dayton, in the county of Montgomery and State of Ohio, have invented certain new and useful Improvements in Printing Cash-Registers, of which I declare the following to be a full, clear, and exact description.

This invention relates to accounting machines and more particularly to the recording mechanism thereof.

The principal object of this invention is to provide mechanism for controlling the issuing of a check and impressing thereon the amount of the sale, when certain transactions, such as "cash" are entered in the machine, and to suspend the operation of the check issuing mechanism, while maintaining the operation of the mechanism for recording the amount of the sale, when other transactions such as "charge", "received on account" and "paid out" are entered in the machine; and furthermore, for suspending the operation of both the issuing and the recording mechanisms when desired.

Another object of this invention is to prevent the operation of certain keys when the check issuing and the recording mechanisms are disabled or suspended.

A further object is to provide the machine with a frame for supporting a record strip and a platen for impressing the strip against the type-carriers, which frame may be detachable at will.

A still further object of the machine is to provide a set of indicators for displaying the number of each transaction, which indicators are connected to type-carriers for recording the number displayed.

With these and incidental objects in view, the invention consists in certain novel features of construction and combination of parts, the essential elements of which are set forth in appended claims, and a preferred form of embodiment of which is hereinafter specifically described with reference to the drawings which accompany and form part of the specification.

Of said drawings: Figure 1 is a central transverse sectional view through a machine embodying the invention. Fig. 2 is a detail perspective view of a manipulative device controlling the check feeding and impression mechanism, in connection with an index plate. Fig. 3 is a detail view of an alining and guiding bar for the manipulative device which controls the check issuing mechanism. Fig. 4 is a side elevation of the recording mechanism. Fig. 5 is a detail view of one of the number indicators and resetting mechanism therefor. Fig. 6 is an enlarged view of the check issuing or feeding mechanism and the impression mechanism. Fig. 7 is a transverse sectional view through one of the eccentrically mounted feed rollers. Fig. 8 is a detail sectional view of an eccentrically mounted lever for operating one of the impression mechanisms. Fig. 9 is a detail elevation of the amount and special type-carriers and the segments for operating them. Fig. 10 is a front elevation of the consecutive number indicators and the numbering type-wheel connected thereto; also of the amount and special type-carriers mounted adjacent to said numbering type-wheel. Fig. 11 is an enlarged side elevation of a frame and the detachable record strip. Fig. 12 is a sectional view taken on the line 12—12 of Fig. 11.

The above mentioned improvements have been shown applied to a machine of the type disclosed in the patent to Thomas Carroll, No. 754,049, and in the application of Edward J. Von Pein, Serial No. 498,548, filed March 26, 1909, and the machine proper will be referred to in a general way only, as a full description may be had by reference to said patent and application.

The amount keys 1 (Fig. 4), and the special keys 2 (Fig. 1), control differentially movable segments 3, which are loosely mounted upon a rock shaft 4, that is suitably supported in the side and intermediate frames 5 of the machine. The segment 3 controlled by the special keys 2, meshes with an intermediate gear 6, which in turn meshes with a pinion 7, connected to an indicator 8 which is suitably mounted upon a transverse shaft 9, supported by the side frames 5. The amount keys 1 control similar segments 3, which through similar intermediate mechanism, operate indicators for displaying the amounts of transactions at the front and back of the machine. The intermediate gears 6, actuated by segments 3, which are controlled by the amount keys 1, in addition to actuating the amount indi-

cators, also actuate pinions 10 connected to a registering mechanism.

Each of the segments 3 is provided with an anti-friction roller 11, which normally rests in the upper end of an elongated slot 12, formed in an arm 13, which is supported at its lower end upon a transverse shaft 14. Each of the arms 13 is provided with a sleeve 15 which surrounds the shaft 14, and which extends through the right hand side of the machine and has attached thereto a segment 17 (Fig. 9). The segments 17 mesh with pinions 18 secured to the ends of sleeves 19 which surround a shaft 20, the latter being suitably supported in the frame work of the machine. The other ends of the sleeves 19 (Fig. 10), carry type-carriers 21 for recording the amount, the class of transaction, and the initial of the clerk making the sale. These type-carriers 21 are provided with duplicate sets of type, so that platens 22 and 23 may be moved against said type-carriers, to take an impression upon a record strip 24 and a check strip 25 respectively. The platens 22 and 23 are moved against the type-carriers 21 by a crank handle 26 and suitable intervening gearing 27, as fully shown in Fig. 4, and which is described in detail in the aforesaid patent to Carroll and in the Von Pein application.

Referring now to Figs. 1, 4 and 6, the mechanism for accomplishing the principal object of this invention, namely, the devices for controlling the check issuing and impression mechanism will be described. An adjustable rod 28 (Fig. 1), is attached at its inner end to a slide 29, which is guided by the rock shaft 4. This slide at its rear end is connected to an arm 30, secured to a shaft 31, which is mounted in the side frames 5 of the machine. The right hand end of the shaft 31 (Fig. 6), has secured thereto a centrally mounted plate 32, one end of which is provided with a cam slot 33 and the other end with a pin 34. The plunger rod 28 (Figs. 1 and 2), is arranged to be adjusted to three positions indicated on an index plate 35, which is suitably secured to the front of the cabinet of the machine. This plate 35 bears the words "Off," "Slip" and "Check" which the head of the plunger rod is arranged to be brought adjacent to, in order to indicate the condition of the recording mechanism. When the head is in the position shown in Fig. 2, which is the "off" position, neither the check nor the slip will be printed; in the intermediate or "slip" position the check issuing mechanism will still remain disabled, while the impression mechanism is rendered operative; and when the plunger rod 28 is pushed to its innermost or "check" position, both the check issuing and impression mechanisms will be rendered operative. The slide 29, which is connected to the plunger rod 28, at its upper side is provided with V shaped notches 36 with which engage the pointed edge of a plate 37, secured to the forward end of an arm 38 which is loosely mounted upon a rod 39, suitably mounted in side frames 5. The plate 37 which is secured to the arm 38 has an extension 40 (Fig. 3), which, in connection with the forward portion of the arm 38, acts as a guide for the slide 29. If the plunger rod is placed between any of the three positions, the arm 38 will be raised so that a projection 41 thereon will extend into a notch 42, formed on a disk 43, secured to a shaft 44 which is rotated upon each operation of the machine, and thereby prevent the operation of the machine. Furthermore, it will be seen that if the plunger rod has been properly adjusted and the machine operation begun, the periphery of the disk 43 will prevent any further operation of the plunger rod until the machine has completed its operation. A spring 45 is connected to the arm 38 in the rear of its pivoted point so as to hold the plate 37 carried at the forward end of said arm into one of the notches 36 of the slide, and thereby prevent accidental movement of said slide.

In the drawings the plunger rod 28 has been shown in the outermost or "off" position, in which position both the check issuing or feeding mechanism and the impression mechanism is rendered inoperative. Upon the movement of the plunger 28 to the intermediate or "slip" position, the slide 28 will rotate the shaft 31 in the direction of the arrow in Figs. 1 and 6, and thereby move the pin 34 through a portion of a cam slot 46, formed in the upper end of an arm 47, which arm is secured to a stub shaft 48, suitably mounted in the frame of the machine. The movement of the pin 34 through the lower portion of the cam slot 46 will rock the arm 47 in a counter clockwise direction, and thereby rotate the shaft 48, through this arm, in a similar direction. The outer end of the shaft 48 is provided with an eccentric disk 49, which disk acts as a bearing for one end of a lever 50, the other end of said lever being suitably attached to a frame 51 carrying a platen 23. Intermediate of the ends of lever 50 projects a pin 53 which plays in a cam groove 54, formed in a disk 55 (Fig. 7), which is loosely mounted upon a shaft 56, which shaft carries a feed roller 57, mounted upon an eccentric portion 58 of the shaft 56, the said shaft being suitably supported in the frame work of the machine.

From Fig. 4 it will be seen that the width of the cam groove 54 is considerably greater than the diameter of the pin 53 which plays therein, so that the slight downward movement of the rear end of the lever 50 carrying said pin, will not affect the cam disk 55 but

will bring the pin 53 in contact with the outer edge of the cam groove 54, in which position the smaller radius portions 59 of the groove will necessarily impart a greater throw to the forward end of the lever 50, and thereby ink the type-carriers and take an impression therefrom, upon a slip previously inserted in the machine above the platen 23. As shown in Fig. 4, the eccentric bearing 49 is in the position it assumes when the plunger rod 28 is in its outermost or "off" position, and in this position it will be seen that the pin 53 will not receive as great a movement from the groove portions 59, as when the pin is in contact with the outer edge of the cam groove 54, which position it assumes when the plunger rod 38 is moved to its intermediate or "slip" position. This movement of the plunger 28 from "off" to "slip" position, rotates the plate 32 carried by the shaft 31 so that a portion of the slot 33 formed in the plate 32, that is circular around the shaft 31, will pass a pin 60 projecting from a rearwardly extending arm 61, and not affect said arm. This arm is loosely mounted upon a rod 62 and is secured to a lever 63, also loosely mounted upon the rod 62. The arm 61 and lever 63 form a part of the check issuing and feeding mechanism, and are brought into play only when the manipulative device or plunger 28 is moved into "check" position. Upon the movement of the plunger rod 28 from the "slip" to the "check" position, the pin 34 projecting from the plate 32 secured to the shaft 31, will pass through the upper end of the slot 46 formed in the arm 47, and which at that time is circular around the shaft 31, so that the movement of this pin 34 upon the adjustment of the plunger rod 28 from "slip" to "check" position, will not affect the arm 47, and consequently will retain the impression mechanism, which includes the arm 50 and the platen 23, in operative condition. The cam slot 33 formed in the opposite end of the plate 32 from the pin 34, will, when the plunger 28 is adjusted from its "slip" to its "check" position, lower the pin 60 and thus rock the arm 61 and lever 63 in a clockwise direction about the rod 62. The lower end of the lever 63 is forked as at 65 so as to straddle a pin 66 projecting from an arm 67 secured to the shaft 56. The upper end of the lever 63 is connected by a link 68, to an arm 69, which is secured to a shaft 70 similar to shaft 56, and which has an eccentric portion 71 upon which is mounted a feed roller 72 similar to the lower feed roller 57. From this it will be seen, that upon the movement of the manipulative device from its intermediate or "slip" position to its innermost or "check" position, lever 63 will be rocked clockwise, and through the above described connection, will rock the eccentrics 58 and 71 so as to carry the feed rollers 57 and 72 upwardly and forwardly respectively. These feed rollers carry gears which mesh with other gears forming a part of the previously mentioned gearing 27, and these rollers are given a complete rotation at each operation of the machine. The teeth of the gears carried by the feed roller are of sufficient depth so that they will always engage with the companion gears, regardless of the position of the eccentrics and the rollers carried thereby. This rotation of the eccentric 58 will carry the lower feed roller 57 into contact with a roller 73 carrying suitable electro plates and the rotation of the eccentric 71 will carry the feed roller 72 into contact with the companion feed roller 74, this latter roller being mounted upon a stub shaft 75 suitably secured in the frame work of the machine.

The feed roller 57 has a pin 155 projecting from the side thereof into an elongated slot 156 (Fig. 7) formed in the disk 55, so that the movement of the roller 57 into contact with the electro roller 73, as just described, will be independent of the disk 55, but the rotary movement of the roller 57 will, through the pin 155, impart a rotary movement to the disk 55. If the disk 55 were raised with the roller 57, in the enabling of the check issuing mechanism, the throw of the platen would be changed, and thereby the impression mechanism improperly operated.

Upon an operation of the machine with the parts in the position just described, the check strip 25 will be fed between the upper set of rollers 72 and 74 and between the lower set of rollers 57 and 73, thence through a slit in a stationary knife 76, and over the platen 23. Upon the continued operation of the machine, a knife 77 carried by the frame 51 which supports the platen 23 will sever a check from the strip 25, upon which will be impressed the amount of the transaction by the further upward movement of the platen 23 by the cam disk 55. The frame 51 carrying the platen 23 is assisted in its return movement by a spring 78, the ends of which are suitably secured to the platen frame 71 and to a guide 79 for said frame.

A ring 80 rotates with the upper feed roller 74 and is provided with a cut out portion 81, through which passes a pin 82 projecting from the upper end of the lever 63, when said lever is moved in a clockwise direction to render the check feeding mechanism operative. Upon the beginning of an operation of the machine, with the lever in this position, the inner surface of the ring 80 will engage with the pin 82, and hold the lever 63 and the parts coöperating therewith, in their adjusted positions. When the parts are in the position shown in Fig. 6, and the machine is operated the periphery of the ring 80 will move into the path of

the pin 82 so that said lever cannot be rocked.

In a vast majority of cases it is desirable to present either a check or a slip to the customer when a special transaction such as "charge", "received on account" or "paid out" occurs, and therefore it is desirable to have the impression mechanism always in operative condition, when either of said transactions is entered in the machine. To accomplish this purpose it has been found advantageous to provide mechanism for locking the special keys 2, when the impression mechanism is disabled by the manipulative device or plunger rod 28 being in its outermost or "off" position, so that none of the special keys 2 can be operated. The mechanism for accomplishing this feature of the invention will now be described.

Secured to the shaft 31 (Fig. 1), is a segmental gear 84, which meshes with a pinion 85 secured to a shaft 86 which runs parallel with the shaft 31. Fast to the shaft 86 and extending forwardly therefrom, is an arm 87 provided with a pin 88, which, when the plunger rod or manipulative device 28 is in its outermost or "off" position, stands in the path of the rear end of a slide 89. This slide is suitably guided upon one of the intermediate frames 5 of the machine, adjacent to the special keys 2, the key pins 90 of which contact with the forward edge of said slide. In this position it will be seen that the pin or stud 88 carried by the arm 87 will prevent any movement of the slide 89, which would be caused by the depression of any one of the keys, and securely lock said keys from operation. Upon the movement of the manipulative device 28 to either its intermediate or innermost position, the stud 88 will be carried out of the path of the slide 89 through the segmental gear 84 and the pinion 85, thereby leaving the special keys 2 free to be operated, it being recalled that with this manipulative device in either of the two above mentioned positions, the impression mechanism will be in operative condition. The locking slide 89 is returned to its normal position as shown in Fig. 1, by a spring 91, the ends of which are secured by the slide and the frame work of the machine. It will also be seen that if the plunger rod is in either "check" or "slip" position, one of the special keys 2 may be depressed, but that the plunger may not thereafter be returned to "off" position. This readily follows from the fact that the rear end of slide 89, when operated by the special keys is above and in the path of the roller 88. This roller cannot, therefore, be raised to the position of Fig. 1, while a special key remains depressed, and thus the check controlling device cannot be moved to "off" position, without operating the machine or releasing the special key.

The checks and slips upon which are printed the amounts of purchases, are intended to be presented to the customers as receipts for their purchases, and therefore it is desirable to have a record of the various transactions made upon a strip for the use of the proprietor in checking the transactions that occur in the store. In order to render the checking of the strip as convenient as possible, the frame carrying said strip has been made so as to be easily detachable from the machine.

A frame 92 (Figs. 11 and 12), supports a supply roll 93 from which the record strip 24 is led around the platen 22 and thence to a storage roll 95, the said platen and storage roll being also carried by the frame 92. This frame 92 is pivotally mounted upon a stud 96 extending from a lever 97 which is pivoted upon a stub shaft 98, supported in the machine frame, which shaft also carries one of the gears of the previously mentioned gearing 27. The frame 92 is provided with a notch 99 into which projects the inner end of a plunger 100 when the said frame is properly positioned upon the stud 96 so as to hold said frame from accidental displacement. The plunger 100 is mounted within a screw head 101 which is secured to a guide block 102 attached to the lever 97. A shoulder 103 (Fig. 11), contacts with the upper edge of the guide block 102 when the frame 92 is in its proper position relative to the lever 97, so that when the platen 22 is carried into contact with the type-carriers as hereafter described, the said frame 92 will not yield.

The lever 97 carrying the frame 92 extends rearwardly from the shaft 98 and at its extreme rear end is provided with a roller 104 which plays in a cam groove 105 in a disk 106 secured to the previously described feed roller 74 and the shape of this groove is such that the lever will be rocked twice during each operation of the machine so as to carry the platen 22, first into contact with the inking device (not shown) to ink the type-carriers and then to carry the platen in contact with the type-carrier to record the item upon the record strip 24.

Mounted upon the shaft 98 adjacent to the lever 97 is a bell crank lever 107, which carries a feed pawl 108 for the record strip at its upper end. The horizontal arm of the bell crank lever 107 contacts with a stud 109 projecting from the lever 97 and is held in contact therewith by a spring 110, the ends of which are connected to the feed pawl 108 and a guide plate 111 which is suitably mounted upon the frame of the machine.

Upon the operation of the machine the bell crank will be rocked with the frame 92 by the contact of pin 109 with the horizontal arm of said bell crank, and near the end of the operation of the machine, a pin 112 pro-

jecting from the disk 106 will contact with the upper end of the bell crank 107 and rock said bell crank an additional distance, so that the pawl 108 will engage with the ratchet 113 carried by the supply roll 95, and thereby feed the record strip 24. A pin 114 projects from the extreme upper end of the bell crank 107 and acts as a stop for the feed pawl 108. In some instances it is desirable to feed the record strip by hand and to accomplish this, a lever 115 is pivoted at its lower end to the frame work of the machine. At its center this lever 115 is provided with a rearward extension 116 from which projects a pin 117. This lever 115 is guided near its upper end by a plate 111, and, when the upper end of said lever is pulled forwardly, the pin 117 will contact with the rear side of the vertical arm of the bell crank 107 and rock said bell crank counter clockwise so that the pawl 108 carried thereby, will engage the ratchet wheel 113 and feed the record strip 24. Upon the release of the lever 115, the said lever and the bell crank 107 will be returned to their normal positions as shown in Fig. 11, by the spring 110. The platen 22 is loosely mounted upon a stud 118 projecting laterally from the frame 92. This stud 118 is hollowed out and fits snugly about the stud 96 projecting from the lever 97. To detach the frame carrying the record strip 24 and the platen 22, operator grasps the supply roll 93 mounted in the upper end of the frame 92 and pulls it forwardly until the part of the frame which normally lies between the guide block 102 and the lever 97 is above said guide block and then slides the said frame 92 laterally on the stud 86 carried by the lever 97. A retaining pawl 119 is mounted upon the frame 92 and engages with the ratchet wheel 113 so as to prevent any accidental retrograde movement of said ratchet wheel.

Check issuing registers are to a great extent used in connection with what is known as a "pay cashier system", that is, the attendant operates the machine and gives a check to the customer, who takes it to the cashier and pays the amount printed on said check. With this system there is considerable danger of collusion between the attendant and the cashier, that is, the checks that have once been issued by the machine and turned into the cashier may be handed back by the cashier to the attendant and then again be presented to customers for payment at the cashier's desk, the amount being then pocketed by the cashier. The proprietor of the establishment is thus defrauded, because the amounts represented by the checks which were tendered the second time in payment for purchases and which were pocketed by the cashier, were not registered upon the machine. In order to overcome this the following mechanism has been designed:

Large indicator wheels 120 are mounted upon a shaft 121 projecting from the side frame 5 of the machine and directly above the recording mechanism. Each of these wheels is consecutively numbered from 0 to 9 and is provided with a ratchet wheel 122 with which a multi-prong pawl 123 engages. This pawl is pivotally mounted on the upper end of a bell crank lever 124 which is loosely mounted upon a stub shaft 125 projecting from the side frame of the machine, the said pawl being held in engagement with the units wheel of the indicator by a coil spring 126. A pitman 127 is connected at its upper end to the horizontal arm of the bell crank 124 and at its lower end is forked to straddle the shaft 44 which is given a complete rotation at each operation of the machine by the previously described gearing 27. Secured to this shaft is a disk 128 provided with a cam groove 129 in which plays a roller 130 projecting from the pitman 127. This cam groove imparts to the pawl 123, through the bell crank 124 and the pitman 127, an invariable extent of movement at each operation of the machine, which movement advances the units wheel of the indicators 120, one-tenth of a rotation. The transfer between the units and the tens and the higher wheels of the device is of the deep notch type well known in the art, and of which no further description will be given. Spring pressed retaining pawls 131 engage with the ratchet wheels 122 carried by the disks 120 and hold them from retrograde movement.

The indicators 120 have formed in the sides thereof, cam grooves 132 in which play rollers 133 projecting from the upper ends of links 134, the lower ends of said links being connected to segmental rack plates 135 loosely mounted upon a stub shaft 137 projecting from the machine frame. These segmental racks 135 mesh with gears 138 secured to printer wheels 139 which are mounted upon the shaft 20 adjacent to the main type-carriers 21. The shape of the cam grooves 132 formed in the indicator disks 120 is such that they position the type-carriers 139 at all times to print the number displayed by the indicators 120. Each of the indicator disks is provided on the opposite side from that in which the cam groove 132 is formed, with a recess 140 (Fig. 5) in which is mounted a spring pressed pawl 141 arranged to engage with a longitudinal recess 142 formed in the shaft 121. This shaft at its outer end is provided with a knurled knob 143 which, whenever desired, may be rotated and through the recess 142 and the pawls 141 reset the indicator disks 120 to zero, thus resetting the type-wheels also to

zero positions. The electro roll 73 may be provided with a suitable electro plate for recording upon the issued check, suitable matter requesting the customer to see that the number printed upon the check corresponds to the number displayed by the indicators. This invitation to the public will deter the clerk or attendant from handing out checks previously issued by the machine, and which do not correspond with the number displayed by the indicators 120. With the intermediate connection between the indicators 120 and the type-carriers 139, it will be seen that the indicators may be reset to zero without any danger of a different number being printed. The type-carriers and either of the platens form a printing couple, either member of which may be moved to effect an impression and in the claims which recite this printing couple, it is intended to cover either method of obtaining an impression.

While the form of mechanism shown herewith and described is admirably adapted to fulfil the objects primarily stated, it is to be understood that it is not intended to confine the invention to the one form of embodiment herein shown and described, as it is susceptible of embodiment in various forms, all coming within the scope of the claims which follow.

What is claimed is:

1. In an accounting machine, the combination with a printing couple, of means for bringing the members of the couple together for effecting an impression upon a record material, means for feeding the record material into position for having an impression taken thereon, and means common to the feeding and the impression effecting means constructed to disable the feeding means while maintaining the impression effecting means in operative condition and to disable both of said means.

2. In an accounting machine, the combination with a printing couple, of means for bringing the members of the couple together for effecting an impression upon a record material, rollers for feeding the record material into position for having an impression taken thereon, and a manipulative device common to the feed rollers and the impression effecting means having connections to disable the feed rollers while maintaining the impression effecting means in operative condition and to disable both the feed rollers and the impression effecting means.

3. In an accounting machine, the combination with a type-carrier, of a platen, means for operating the platen and thereby taking an impression from the type-carrier upon a check strip, means for feeding the check strip into position for having an impression taken thereon, and a manipulative device common to the check strip feeding means and the platen operating means having connections to disable the feeding means while maintaining the platen operating means in operative condition and to disable both the feeding and the platen operating means.

4. In an accounting machine, the combination with a type-carrier, of a platen, means for operating the platen and thereby taking an impression from the type-carrier upon a check strip, means for feeding the check strip into position for having an impression taken thereon, and an adjustable device movable to three positions and having connections to control the platen operating means and the check feeding means, in one of the positions of the adjustable device the feeding and platen operating means being operative, in a second position the feeding means being disabled while the platen operating means remains operative, and in the third position both the feeding and platen operating means being rendered inoperative.

5. In an accounting machine, the combination with a type-carrier, of a platen, means, including a lever, for operating the platen and thereby taking an impression upon a check strip or slip from the type-carrier, an eccentrically mounted bearing for the lever and a manipulative device having connections to rotate the bearing for the lever, and thereby change the extent of movement imparted to the platen by said lever.

6. In an accounting machine, the combination with a type-carrier, of a platen, a lever connected at one end to the platen, an eccentrically mounted bearing upon which the lever is mounted at its other end, a disk having a cam groove formed therein, means for rotating the disk at each operation of the machine, a pin extending from the lever into the cam groove, and a manipulative device connected to rotate the eccentrically mounted bearing for the lever and thereby change the extent of movement imparted to the platen through the lever by the cam disk.

7. In an accounting machine, the combination with a type carrier, of a platen, a lever to which said platen is connected, an eccentric disk on which said lever is pivoted, means for operating the lever whereby to cause the platen to take impressions from the type carrier, and means for rotating said eccentric disk and thereby varying the extent of movement of the platen.

8. In an accounting machine, the combination with a printing couple, of means for bringing the members of the couple together for effecting an impression upon a check strip, a manipulative device controlling the operativity of the impression effecting means, and a series of keys controlled by the manipulative device and simultaneously rendered operable or inoperable by the latter.

9. In an accounting machine, the combination with a printing couple, of means for bringing the members of the couple together for effecting an impression upon a check strip, a manipulative device having connections to render the impression effecting means operative or inoperative, a series of keys, and a lock for said keys controlled by the manipulative device, thus preventing the operation of any of the keys when the impression effecting means is in an inoperative condition.

10. In an accounting machine, the combination with a printing couple, of means for bringing the members of the couple together for effecting an impression upon a check strip, means for feeding the check strip into position for having an impression taken thereon, means, common to the feeding and the impression effecting means, for disabling the feeding means while maintaining the impression effecting means in operative condition so that an inserted slip may have an impression taken thereon and for disabling both of said means, a series of keys, and means for preventing the operation of said keys when both the feeding and the impression effecting means are disabled.

11. In an accounting machine, the combination with a type-carrier, of a platen, means for operating the platen for taking an impression upon a record material from the type-carrier, a manipulative device having connections to disable the platen operating means, a series of keys, and means for preventing the operation of any of the keys when the platen operating means is disabled.

12. In an accounting machine, the combination with a type-carrier, of a platen, means for operating the platen for taking an impression upon a check strip from the type-carrier, means for feeding the check strip into position to have an impression taken thereon, a manipulative device common to the feeding and the impression effecting means having connections to disable the feeding means while maintaining the impression effecting means in operative condition so that an inserted slip may have an impression taken thereon, and to disable both of said means, a series of keys, and means for preventing the operation of said keys when both the feeding and the impression effecting means are disabled.

13. In an accounting machine, the combination with a type-carrier, of a platen, a frame supporting said platen and a record strip, a lever upon which said frame is detachably mounted, and means for rocking the lever thereby carrying the platen into contact with the type-carrier, and making an impression upon the record strip.

14. In an accounting machine, the combination with a type-carrier, of a platen, a supply and a storage roller for a record strip, a frame supporting the platen and the supply and storage rolls, a lever upon which said supporting frame is pivotally and detachably mounted, and a cam for rocking the lever, thereby carrying the platen into contact with the type-carrier and making an impression upon the record strip.

15. In an accounting machine, the combination with a set of type-carriers for recording the amount of each sale upon a record strip, of a second set of type-carriers for recording the number of each sale upon the strip, indicators for displaying the number of each sale recorded, cam grooves formed in the indicators, and connections, driven by the cam grooves, for actuating the numbering type-carriers.

16. In an accounting machine, the combination with a set of type-carriers for recording the amount of each sale upon a record strip, of a second set of type-carriers for recording the number of each sale upon the strip, indicators for displaying the number of each sale recorded, cam grooves formed in the indicators, connections driven by the cam grooves for actuating the numbering type-carriers, and devices for resetting the indicators and through the cam grooves and connections resetting the numbering type-carriers.

17. In an accounting machine, the combination with type carriers for recording amounts on a record strip, of a set of additional type carriers for recording the number of each transaction on said strip, indicators displaying the number of each sale recorded, and positive connections whereby said indicators drive said type carriers.

18. In an accounting machine, the combination with type carriers for recording the number of each sale on a record strip, of an indicating counter for displaying the number of each transaction, an operating mechanism having connections to advance said counter step by step, and devices permanently connecting each counter element with the corresponding type carrier.

19. In an accounting machine, the combination with type carriers for recording the number of each sale on a record strip, of an indicating counter for displaying the number of each transaction, an operating mechanism having connections to advance said counter step by step, and devices compelling the type carriers at all times to move equivalently to the movement of the counter elements.

20. In an accounting machine, the combination with a printing counter for recording the number of each sale on a record strip, of a second counter for indicating

the number of each sale, means for actuating one of said counters, and means controlled by the actuated counter for operating the other counter.

21. In an accounting machine, the combination with a type carrier; of a platen; a lever to which the platen is connected; means for varying the location of the pivot of the lever; and means for moving the lever about its pivot to carry the platen toward the type carrier, the connection between the lever and its moving means being such that on different locations of the pivot for the lever the platen will be moved to different extents toward the printing type.

In testimony whereof I affix my signature in the presence of two witnesses.

EDWARD J. VON PEIN.

Witnesses:
R. C. GLASS,
CARL W. BEUST.