US 20010055996A1

(19) United States

(12) Patent Application Publication (10) Pub. No.: US 2001/0055996 A1

Iwata et al. (43) Pub. Date: Dec. 27, 2001

(54) IRON GOLF CLUB

(76) Inventors: **Mototaka Iwata**, Osaka (JP); **Naoyuki Masuda**, Osaka (JP)

Correspondence Address:
TROUTMAN SANDERS LLP
BANK OF AMERICA PLAZA, SUITE 5200
600 PEACHTREE STREET , NE
ATLANTA, GA 30308-2216 (US)

(21) Appl. No.: **09/833,319**

(22) Filed: **Apr. 12, 2001**

(30) **Foreign Application Priority Data**

May 17, 2000 (JP) ..... 2000-145081 (P)

Publication Classification

(51) **Int. Cl.**[7] **A63B 53/04**

(52) **U.S. Cl.** **473/350**

(57) **ABSTRACT**

The inventive iron golf club comprises a head part having a face, and a restitution coefficient is in the range of at least 0.81 and not more than 0.95 when colliding a ball against a sweet spot in the face at a speed of 44 m/s. In the aforementioned iron golf club, the effective face area of the head part is at least 2500 mm^2 and not more than 5000 mm^2, the effective deflection length is at least 36 mm and not more than 72 mm, and the thickness of the face is at least 1.0 mm and not more than 2.5 mm at the sweet spot.

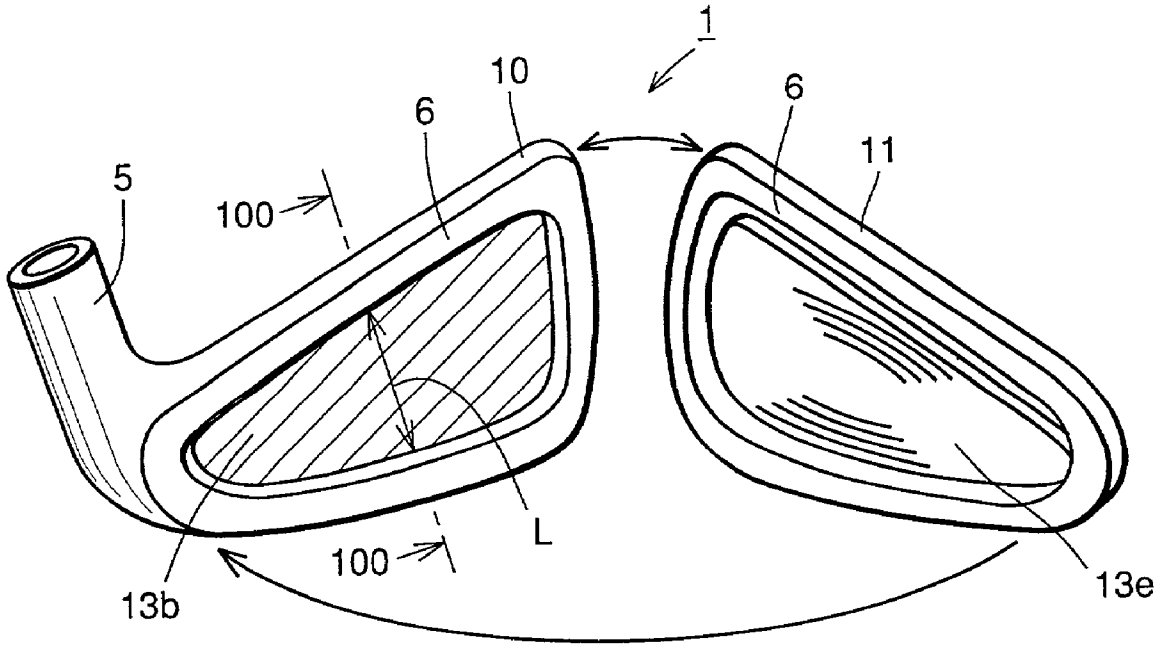

FIG.1

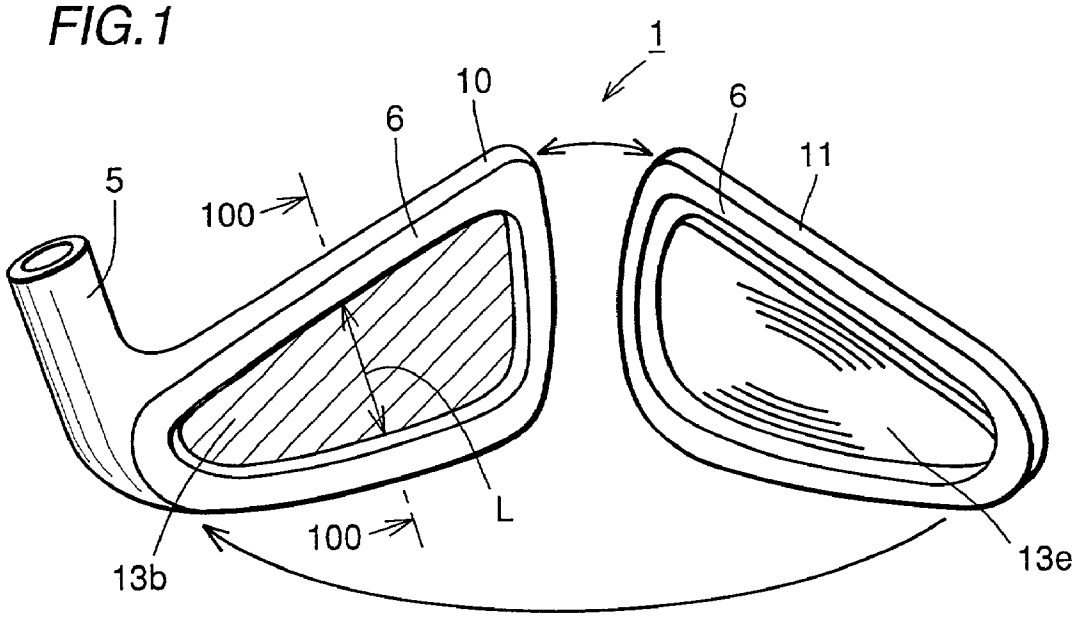

FIG.2

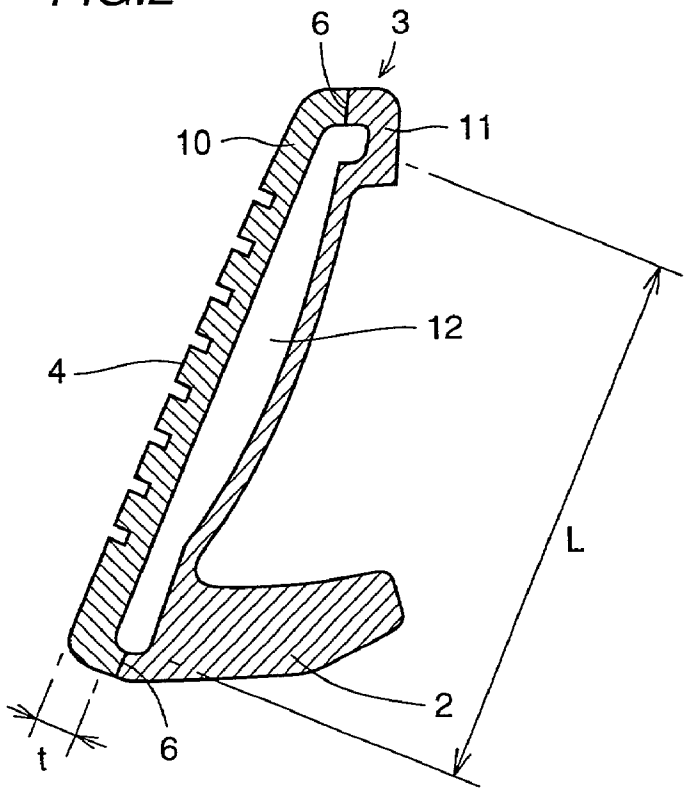

FIG.3

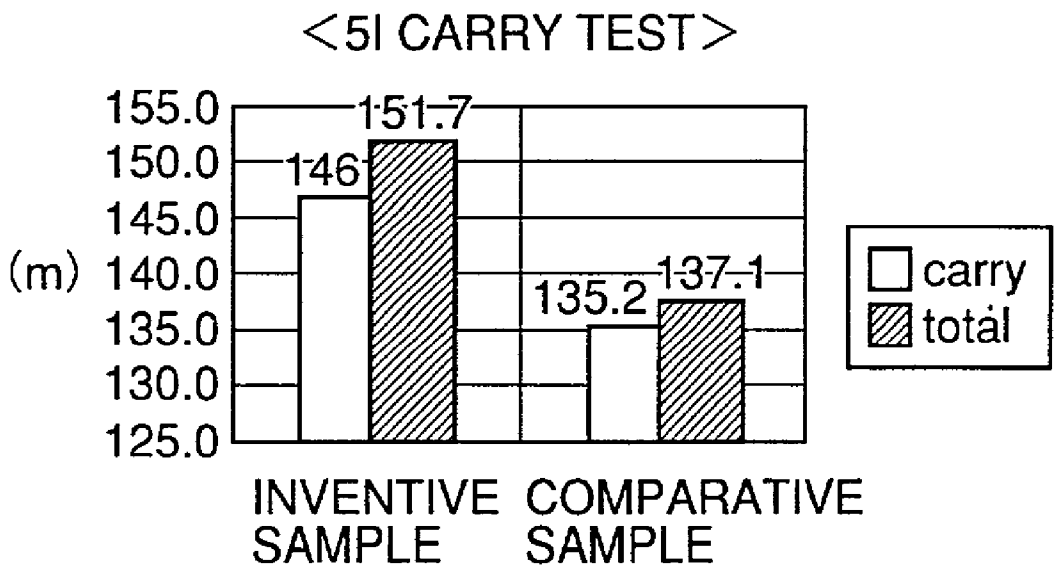
<5I CARRY TEST>
155.0
150.0
145.0
(m) 140.0
135.0
130.0
125.0
146
151.7
135.2
137.1
carry
total
INVENTIVE SAMPLE
COMPARATIVE SAMPLE

IRON GOLF CLUB

[0001] This application claims priority from Japanese patent application No. 2000-145081 (P) filed May 17, 2000 entitled "Iron Golf Club."

BACKGROUND OF THE INVENTION

[0002] 1. Field of the Invention

[0003] The present invention relates to an iron golf club, and more particularly, it relates to an iron golf club capable of improving the carry by rendering its face readily deflectable at the hit.

[0004] 2. Description of the Prior Art

[0005] U.S. Pat. No. 5,863,261 describes first prior art related to the head of a golf club. This literature discloses a head part of a golf club having two face plates fixed to each other with a fluid for causing elastic deformation by a doubler structure and effectively supplying the energy of the golf club to a ball thereby improving the carry.

[0006] As second prior art, U.S. Pat. No. 5,605,511 discloses a head part of a golf club having an annular groove provided on the rear peripheral wall part of its face to enclose the central part.

[0007] A golf club is required to get a carry. In particular, a long carry eases the next shot and influences the score. Repulsiveness of the clubface is remarkably concerned with the carry. Therefore, it is important to improve the repulsiveness of the clubface.

[0008] According to the head part of the golf club disclosed in the aforementioned first prior art, it is conceivable to improve the repulsiveness to some extent. However, a great deal of time and labor for connection and a high cost are required for manufacturing the structure having two face plates in the first prior art.

[0009] The head part of the golf club according to the second prior art, provided with the annular groove thereby reducing audible vibration, is not directed the carry of a golf ball. Further, a great deal of time and labor and a high cost are required for manufacturing the head part due to the necessity for providing the annular groove.

SUMMARY OF THE INVENTION

[0010] Accordingly, a principal object of the present invention is to provide an iron golf club having a head part capable of improving repulsiveness and increasing the carry of a ball by reducing the rigidity of its face without requiring a great deal of time and labor and a high cost for manufacturing the same.

[0011] The iron golf club according to the present invention comprises a head part having a face, and a restitution coefficient is in the range of at least 0.81 and not more than 0.95 when colliding a ball against a sweet spot in the face at a speed of 44 m/s.

[0012] Thus, the carry of the ball can be increased not only when the ball is hit by the sweet spot but also when hit by a portion close to the sweet spot due to the high restitution coefficient at the sweet spot of the face. The restitution coefficient can be improved by reducing the thickness of the face, for example, without requiring a great deal of time and labor or a high cost for manufacturing the iron golf club.

[0013] In the head part of the aforementioned iron golf club, an effective face area is preferably at least 2500 mm^2 and not more than 5000 mm^2. Throughout the specification, the term "effective face area" stands for the surface area of a portion of a face part substantially deflectable at the hit, such as the surface area of a face central portion excluding wall potions around the face part in a clubhead having a hollow structure, for example.

[0014] In the head part of the aforementioned iron golf club, an effective deflection length is preferably at least 36 mm and not more than 72 mm. The term "effective deflection length" stands for the length of a portion of the face part substantially deflectable at the hit, passing through the sweet spot in a direction perpendicular to the ground, such as the length of a portion between wall portions around the face part, passing through the sweet spot in a direction perpendicular to the ground, in a clubhead having a hollow structure, for example.

[0015] In the head part of the iron golf club according to the present invention, the thickness of the face is preferably at least 1.0 mm and not more than 2.5 mm at the sweet spot. Further, the elasticity of the face part is preferably at least 30 GPa and not more than 210 GPa.

[0016] The aforementioned subject matters may be properly combined with each other.

[0017] The foregoing and other objects, features, aspects and advantages of the present invention will become more apparent from the following detailed description of the present invention when taken in conjunction with the accompanying drawings.

BRIEF DESCRIPTION OF THE DRAWINGS

[0018] **FIG. 1** is an exploded perspective view of a head part of an iron golf club according to the present invention;

[0019] **FIG. 2** is a sectional view taken along the line **100-100** in **FIG. 1**, showing a front-part component and a rear-part component assembled with each other; and

[0020] **FIG. 3** shows results of a carry test made on inventive and comparative samples.

DESCRIPTION OF THE PREFERRED EMBODIMENTS

[0021] In an iron golf club according to the present invention, the thickness of a face in a head part is reduced, for example, thereby improving a restitution coefficient when colliding a prescribed ball against a face part at a prescribed speed. More specifically, the restitution coefficient is set in the range of at least 0.81 and not more than 0.95 when colliding the ball against a sweet spot at a speed of 44±0.5 m/s in a test method described later.

[0022] When the thickness of the face is reduced as described above, the face part is rendered readily deflectable, i.e., readily elastically deformable to be capable of exhibiting a spring effect and improving repulsiveness of the face. More specifically, the thickness of the face is set to at least 1.0 mm and not more than 2.5 mm.

[0023] The term "the thickness of the face" stands for the board thickness of the face part in a direction perpendicular to the face at the sweet spot. The elasticity of the face part is preferably at least 30 GPa and not more than 210 GPa.

[0024] The repulsiveness of the face can be further improved by increasing an effective face area, i.e., the area of a deformed region at the center of the face. More specifically, the effective face area is at least 2500 mm^2 and not more than 5000 mm^2.

[0025] In the present invention, the term "effective face area" stands for the surface area of a portion of the face part substantially deflectable at the hit. In an iron golf club having a head part of a hollow structure, for example, the effective face area corresponds to the area of a face center portion excluding wall portions around the face, such as the area of a portion shown by slant lines in **FIG. 1**.

[0026] The repulsiveness of the face can be improved by increasing the effective deflection length, i.e., the length between a sole part and a top edge part at the center of the face. More specifically, the effective deflection length is at least 36 mm and not more than 72 mm.

[0027] In the present invention, the term "effective deflection length" stands for the length of a portion of the face part substantially deflectable at the hit, passing through the sweet spot of the face in a direction perpendicular to the ground. In an iron golf club having a head part of a hollow structure, for example, the effective deflection length corresponds to the length of a portion between wall portions around the face, passing through the sweet spot (center of a face score line) in a direction perpendicular to the ground. Referring to **FIGS. 1 and 2**, symbol L denotes the effective deflection length.

[0028] In the iron golf club head part having the head part of a hollow structure, the wall portions around the face conceivably serve as support portions deforming the face at the hit, and hence the region enclosed with the wall portions can be readily elastically deformed by increasing the length between the support portions. Consequently, the repulsiveness is improved as described above.

[0029] Further, the amount of elastic deformation is reduced if the length between the support portions is small on the portion colliding with the ball regardless of the effective face area, and hence the length between the support portions must be increased. Thus, the repulsiveness of the face can be further improved by increasing the aforementioned effective deflection length.

[0030] A method of measuring the restitution coefficient is now described.

[0031] First, the face of the iron golf club head part is stood perpendicularly to the ground and the golf ball to be collided therewith, and the golf ball is collided against the center of the score line of the clubhead or the sweet spot, for measuring the ball speed Vin (Vin=44±0.5 m/s in this method) before collision and the ball speed Vout after collision with a speed meter having an optical sensor.

[0032] The restitution coefficient COR is calculated from the measured speeds Vin and Vout and the following numerical formula (1):

$$Vout/Vin=(COR\times M-m)/(M+m) \quad (1)$$

[0033] Where M represents the mass of the head part of the iron golf club, and m represents the mass of the golf ball. Pinacle Gold LS by Acushinet Company is employed as the golf ball. The golf ball, having an average weight of 45.4±0.4 g, is kept in a room maintained at a temperature of 23±1° C. during the test.

[0034] An embodiment of the present invention is now described with reference to FIGS. **1** to **3**. **FIG. 1** is an exploded perspective view of a head part **1** of an iron golf club according to the present invention. **FIG. 2** is a sectional view taken along the line **100-100** in **FIG. 1** showing a front-part component **10** and a rear-part component **11** assembled with each other. Referring to **FIGS. 1 and 2**, illustration of a shaft and a grip of the iron golf club is omitted.

[0035] As shown in **FIG. 1**, the head part **1** is formed by integrally assembling the front-part component **10** and the rear-part component **11** with each other. The front-part component **10** has a concave part **13***b* provided on its center, a connection part **6** (wall portion) provided on its peripheral edge, and a hosel **5**. The rear-part component **11** has a concave part **13***a* provided on its center and a connection part **6** provided on its peripheral edge. The front-part component **10** and the rear-part component **11** are integrated with each other by welding the peripheral edges of the connecting parts **6**. Welding margins are 2 mm, for example.

[0036] Referring to **FIG. 1**, the area of the bottom surface of the concave part **13***b*, i.e., the area of the region shown by slant lines, corresponds to the aforementioned effective face area. According to this embodiment, the effective face area is 2930 mm^2.

[0037] Further, the length L shown by arrow in **FIG. 1** corresponds to the aforementioned effective deflection length, which is 36.5 mm in this embodiment.

[0038] As shown in **FIG. 2**, the head part **1** of the iron golf club according to this embodiment is provided in a cavity back structure with a sole part **2** having a larger thickness than a top edge part **3**, and has a hollow structure with a space **12** defined between the front-part component **10** and the rear-part component **11**.

[0039] The thickness (face thickness) t of a face part having a face **4** serving as a hitting surface is 2.3 mm. This thickness corresponds to that at a sweet spot.

[0040] The front-part component **10** and the rear-part component **11** are formed by forging stainless steel SUS 630, for example.

[0041] The material for the face is not restricted to the aforementioned stainless steel but may alternatively be prepared from another stainless steel such as austenite-based SUS 301, 303, 304, 304N1, 304N2, 305, 309S, 310S, 316, 317, 321, 347 or XM7, martensite-based SUS 410, 420, 431 or 440, precipitation-hardened SUS 630, ferrite-based SUS 405, 430 or 444, soft iron such as S15C, S20C, S25C, S30C or S35C, or special steel such as high tension steel, ultrahigh tension steel, ausforming steel, maraging steel or spring steel. Further alternatively, the material can be prepared from a titanium alloy such as pure titanium I, II, III or IV, an α alloy of 5Al-2.5V, an α-β alloy of 3Al-2.5V, 6Al-4V, 4.5Al-3V-2Fe-2Mo, a β alloy of 15V-3Cr-3Sn-3Al, 10V-2Fe-3Al, 13V-11Cr-3Al, 15Mo-5Zr, 15V-6Cr-4Al, 15Mo-

5Zr-3Al, 20V-4Al-1Sn, 22V-4Al or 3Al-8V-6Cr-4Mo-3Zr, an aluminum alloy such as pure aluminum, 2017, 2024, 7075, 3003, 5052, 5056, 6151, 6053 or 6061 or a magnesium-based alloy such as AZ63A, AZ81A, AZ91A, AZ91C, WE54 or EZ33A, while a doubler formed by any combination of these materials is employable.

[0042] The material for the parts other than the face can be prepared from a material generally employed for manufacturing a clubhead such as iron, stainless steel, aluminum, titanium, magnesium, tungsten, copper, nickel, zirconium, cobalt, manganese, zinc, silicon, tin, chromium, FRP, synthetic resin, ceramic or rubber, which may be singularly employed. Alternatively, a combination of at least two of these materials may be employed.

[0043] The face and the remaining parts can be manufactured by precision casting, which can be carried out with high dimensional accuracy at a low cost. Alternatively, the head body can be manufactured by die casting, pressing or forging. Further alternatively, the respective parts can be manufactured by pressing, forging, precision casting, metal injection, die casting, cutting or powder metallurgy and connected with each other by bonding, press fitting, engaging, pressure connection, screwing, brazing or the like for forming the clubhead.

[0044] Characteristics of inventive sample of the aforementioned head part and comparative samples A to D of conventional head parts are now described with reference to Table 1 and **FIG. 3**.

[0045] Table 1 shows restitution coefficients, sizes and areas of the inventive sample and the comparative samples A to D. Referring to Table 1, the comparative sample D, for example, is the so-called cavity back iron clubhead, which is made of soft iron S25C.

TABLE 1

No.5	Inventive Sample	Comparative Sample A	Comparative Sample B	Comparative Sample C	Comparative Sample D
Face Thickness (mm)	2.3	3.4	3.2	2.8	3
Effective Face Area (mm^2)	2930	2080	1760	2410	1820
Effective Deflection Length (mm)	36.5	31.4	31.9	35.5	29.6
Restitution Coefficient	0.815	0.771	0.785	0.804	0.784

[0046] Comparing the inventive sample with the aforementioned comparative sample D in particular, the face thickness is reduced by 23%, the effective face area is increased by 61% and the effective deflection length is increased by 23%. In the inventive sample, the restitution coefficient of 0.815 is improved by 4% as compared with that of 0.784 of the comparative sample D.

[0047] Also as compared with the remaining comparative samples A to C, the restitution coefficient of the inventive sample is extremely high as shown in Table 1.

[0048] **FIG. 3** shows the carries of the inventive sample and the comparative sample D. Number five irons with a loft of 26 degrees were employed for making a robot test at a head speed of 35 m/s. **FIG. 3** shows an average value of six shots as to each sample. As shown in **FIG. 3**, the inventive sample exhibits a carry of 146.7 m and a total carry of 151.7 m inclusive of roll, while the comparative sample exhibits a carry of 135.2 m and a total carry of 137.1 m inclusive of roll. Thus, it is understood that the carry and the total carry of the inventive sample are improved by 8.5% and 10.6% respectively as compared with the comparative sample D.

[0049] According to the present invention, as hereinabove described, the repulsiveness of the clubface can be improved by reducing the rigidity of the face without requiring a great deal of time and labor and a high cost for manufacturing the head part of the iron golf club, for increasing the carry of the ball.

[0050] Although the present invention has been described and illustrated in detail, it is clearly understood that the same is by way of illustration and example only and is not to be taken by way of limitation, the spirit and scope of the present invention being limited only by the terms of the appended claims.

What is claimed is:

1. An iron golf club comprising a head part having a face, wherein

a restitution coefficient is in the range of at least 0.81 and not more than 0.95 when colliding a ball against a sweet spot in said face at a speed of 44 m/s.

2. The iron golf club according to claim 1, wherein

an effective face area being the surface area of a portion of said face deflectable at the hit is at least 2500 mm^2 and not more than 5000 mm^2.

3. The iron golf club according to claim 1, wherein

said head part has a hollow structure,

wall portions are provided on the peripheral edge of a face part in said head part, and

the surface area of a central portion of said face located between said wall portions is at least 2500 mm^2 and not more than 5000 mm^2.

4. The iron golf club according to claim 1, wherein

an effective deflection length being the length of a portion of said face deflectable at the hit, passing through said sweet spot of said face in a direction perpendicular to the ground, is at least 36 mm and not more than 72 mm.

5. The iron golf club according to claim 1, wherein

said head part has a hollow structure,

wall portions are provided on the peripheral edge of a face part in said head part, and

an effective deflection length being the length between said wall portions, passing through said sweet spot of said face in a direction perpendicular to the ground, is at least 36 mm and not more than 72 mm.

6. The iron golf club according to claim 1, wherein

the thickness of a face part is at least 1.0 mm and not more than 2.5 mm at said sweet spot of said face.

7. The iron golf club according to claim 1, wherein

the elasticity of a face part in said head part is at least 30 GPa and not more than 210 GPa.

* * * * *