June 5, 1956 D. B. MURRAY 2,748,495

MEANS FOR DRYING MICROSCOPE SLIDES, PIPETTES, AND SIMILAR TYPES OF LABORATORY INSTRUMENTS

Filed June 25, 1953

FIG. 1.

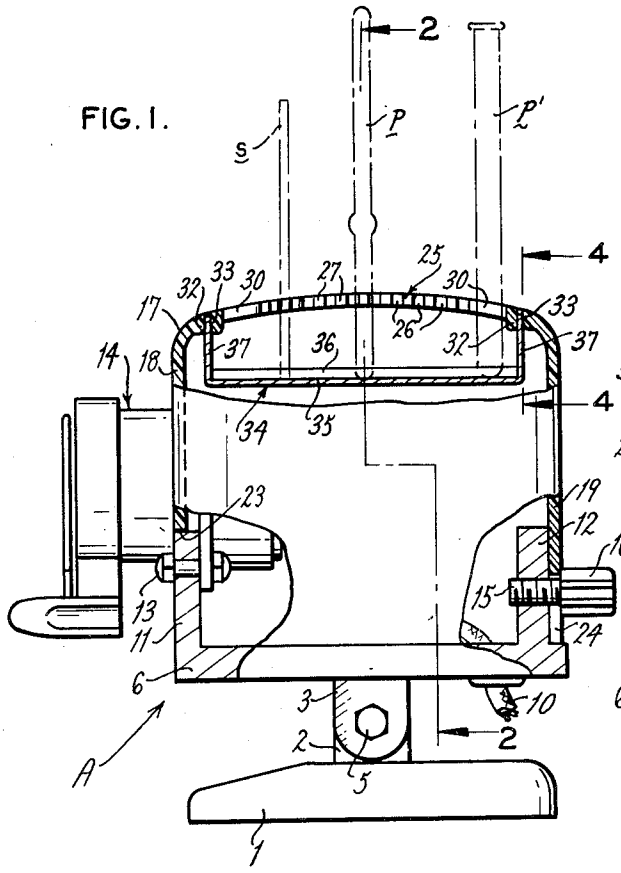

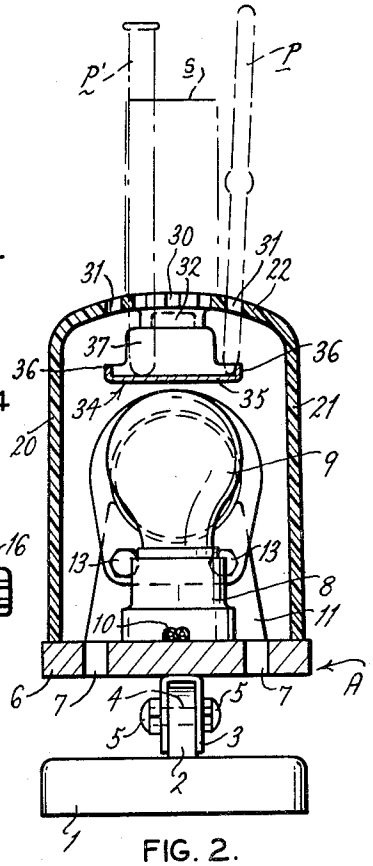

FIG. 2.

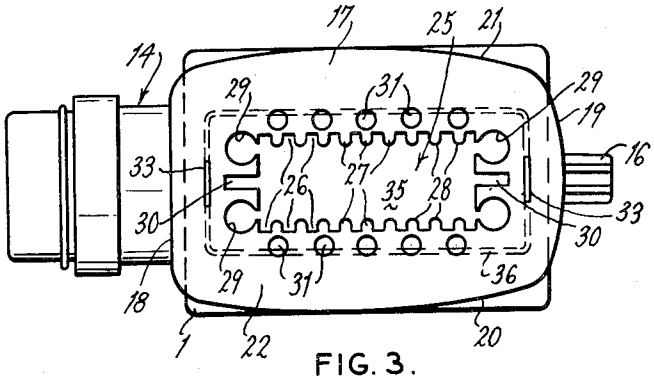

FIG. 3.

FIG. 4.

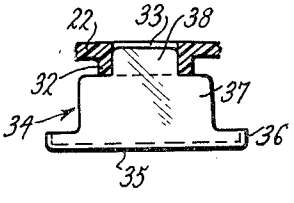

INVENTOR.
DONALD B. MURRAY

BY Alfred W. Leitchaft

ATTORNEY

United States Patent Office 2,748,495 Patented June 5, 1956

2,748,495

MEANS FOR DRYING MICROSCOPE SLIDES, PIPETTES, AND SIMILAR TYPES OF LABORATORY INSTRUMENTS

Donald B. Murray, Hollywood, Calif., assignor to Burton Manufacturing Company, Los Angeles, Calif., a corporation of Illinois

Application June 25, 1953, Serial No. 364,127

6 Claims. (Cl. 34—107)

This invention relates in general to scientific laboratory apparatus and more particularly to means for drying microscope slides, pipette, and similar types of laboratory instruments.

In scientific laboratories, and particularly in laboratories primarily devoted to making various types of pathological and bacteriological analyses in conjunction with medical diagnosis, various biochemical and microscopic routines are performed on samples of body fluids, serums, tissue sections, and the like. In so doing, microscope slides and pipettes of different types are commonly employed and must be carefully washed and dried after each use. Because of the size and delicate nature of such devices, it is not usually desirable to dry them with a towel, inasmuch as the lint from the towels and finger marks from handling would adhere to the slides and pipettes and would interfere with the accuracy of ultimate use. It is therefore the practice to allow this type of device to drain and dry slowly in the open air. However, it has been found that such a practice results in rather slow drying, particularly under adverse atmospheric conditions, and as a result, an unnecessarily large number of microscope slides, pipettes, and the like, are always out of service in the process of being cleaned and dried. Furthermore, scientific laboratories ordinarily find that space is at a premium and it is always necessary to invest whatever funds may be available in equipment directly related to diagnostic and analytical work, with the result that there is, ordinarily, very little space or available funds for investment in accessory implements such as a pipette drying device.

It so happens, however, that in all laboratories where microscopes and microscope slides are in use, a microscope light-source is employed to illuminate the microscope stage. Such illuminators employ high wattage electric lamps and generate a considerable amount of heat. Ordinarily such illuminators also are provided with either natural or artificial draft means for causing a reasonable flow of circulating air within the lamp housing to promote cooling. Consequently, a microscope illuminator is inherently a source of hot, dry, moving air, which could be used for drying microscope slides, pipettes, and similar types of laboratory glass ware and instruments. In fact, it has been found in connection with the present invention that any device constructed in the manner of a lamp housing having an electric lamp or similar heat source with means for establishing a current of air through the housing, will form an excellent means for drying microscope slides, pipettes, and similar instruments of the type here under consideration, if constructed in such a manner as to support the instruments in vertical or free-draining position so that the currents of hot air will flow upwardly along and through the articles being dried.

It is therefore the primary object of the present invention to provide a microscope illuminator having means for supporting microscope slides, pipettes, and similar laboratory instruments and devices in a substantially vertical or free-draining position, in the path of an upwardly moving current of air which has been heated by the light-source of the illuminator.

It is another object of the present invention to provide a device adapted for drying microscope slides, pipettes, and similar laboratory instruments by the use of moving currents of hot air.

It is a further object of the present invention to provide a slide and pipette drier which is simple and economical in construction and highly efficient in operation.

It is also an object of the present invention to provide a device of the type stated which is inexpensive and occupies a relatively small amount of space.

With the above and other objects in view, my invention resides in the novel features of form, construction, arrangement, and combination of parts presently described and pointed out in the claims.

In the accompanying drawings—

Figure 1 is a side elevational view, partly broken away and in section, of a microscope illuminator constructed in accordance with and embodying the present invention;

Figure 2 is a vertical sectional view taken along line 2—2 of Figure 1;

Figure 3 is a top plan view of the microscope illuminator; and

Figure 4 is a fragmentary sectional view taken along line 4—4 of Figure 1.

Referring now in more detail and by reference characters to the drawings, A designates a microscope illuminator comprising a somewhat rectilinear weghted base **1**, preferably having an upstanding centrally located ear **2**, for rockably supporting a downwardly turned U-shaped bracket **3**, operably secured thereto by a transverse shaft **4** which is, in turn, provided on its outwardly projecting ends with cap nuts **5**. The bracket **3** is securely fastened upon the underside of a base plate **6**, having a plurality of upwardly extending ventilation apertures **7**, and being provided upon its upper face with a conventional lamp socket **8** for receiving a high wattage electric illuminator lamp **9**. The socket **8** is conventionally connected to an electric cord **10**, which may be connected in any suitable manner to a source of electrical current. Although not forming a part of the present invention and therefore not shown or disclosed herein, any suitable type of switch as is customary in this type of electrical wiring may be connected to the cord **10**.

Centrally of its forward and rearward transverse margin, the base **6** is integrally provided with upstanding flanges **11**, **12**, and secured to the flange **11** by means of a bolt **13** is a conventional, manually adjustable, focusing-tube assembly **14**, having a suitable lens system for directing a beam of concentrated light upon a microscope stage or elsewhere as needed. The flange **12** is set forwardly a short distance from the rear transverse margin of the base **6** and is threadedly provided with a rearwardly projecting screw **15**, preferably having a large plastic handle or knob **16** for convenience in manipulation.

Provided for snug-fitting slidable engagement downwardly upon the base **6** and around the flanges **11**, **12**, is a hollow shell or housing **17**, having a front wall **18**, a rear wall **19**, opposed parallel side walls **20**, **21**, and an arcuate top wall **22**. The housing or shell **17** is preferably molded or otherwise suitably formed from a phenolic resin such as Bakelite, or the like, and is provided in its front wall **18** with a downwardly presented somewhat U-shaped recess or opening **23**, which fits around the peripheral margins of the flange **11** in a snug-fitting attractively appearing manner. Similarly, the rear wall **19** is provided with a relatively narrow slot **24**, opening upon

the lower margin thereof, and extending upwardly for fitting around the bolt **15**. It will be evident that by tightening the bolt **15**, the housing **17** will be firmly secured to the base **6**, and similarly, by loosening the bolt **15**, the housing **17** may be readily lifted upwardly from the base to permit changing the lamp **9**.

The top wall **22** of the housing **17** is provided with a centrally located elongated opening **25**, provided along its longitudinal margins with oppositely aligned, somewhat rectangular, recesses **26**, separated by intermediate fingers **27**, the outer margins of which are rounded off as at **28**. Along each of its transverse margins, the opening **25** is provided with a pair of somewhat circular apertures **29** and a centrally located rectangular recess **30**. Finally, the top wall **22** is provided with two rows of circular apertures **31**, respectively located outwardly from and along the longitudinal margins of the recess **25**. The apertures **31** are somewhat smaller than the apertures **29** and are adapted to receive a pipette of somewhat smaller diameter; whereas the recesses **29** will accommodate a pipette or similar instrument of somewhat larger diameter. The pairs of transversely aligned recesses **26** are spaced and sized for accommodating the standard size of microscope slide and the longitudinally aligned pair of recesses **30** are spaced and sized so as to accommodate a glass plate of a size commonly found in scientific laboratories.

The top wall **22** of the housing **17** is furthermore interiorly provided with a pair of lengthwise aligned bosses **32**, formed in and depending from the underface thereof, and being transversely apertured in the provision of elongated slots **33**, as best seen in Figure 4.

Provided, for removable disposition upon the underface of the top wall **22** is a supporting tray **34** formed of stainless steel or any other suitable material and integrally including a flat bottom wall **35** having short upstanding side flanges **36** and relatively long transverse end flanges **37**, the latter being integrally provided along their upper margins with narrow upstanding ears **38** adapted for snug-fitting, frictionally retained, engagement within the slots **33**. It will be noted that the ears **36** are slightly smaller in vertical height than the vertical dimension of the slots **33** so as not to protrude above the top surface of the top wall **22**.

In use, the electrical cord **10** is connected to any conventional source of electrical power and the lamp **9** is lighted thereby giving off a substantial quantity of heat. As the air within the shell or housing **17** becomes heated, it will rise and circulate upwardly past the supporting tray **34** and then outwardly through the ventilation apertures **7** and consequently establishing an upward draft or circulation of warm air. Microscope slides *s* and pipettes *p—p'* such as those schematically designated in dotted lines in Figures 1 and 2 may be inserted into the apertures and recesses **26**, **29**, **30**, and **31**, in any convenient or appropriate manner. The lower ends will rest upon and be supported by the wall **35** of the supporting tray **34**, which has been warmed by the lamp **9**, and the water draining therefrom will be caught and evaporated therefrom. The microscope slides *s* and the pipettes *p—p'* are supported in substantially vertical or upright position and will be completely and efficiently dried by the upward current of warm air. The microscopic slides *s* and pipettes *p—p'* can be stored in this position for as long as may be desired, or when dry, can be removed and placed in suitable storage drawers or racks. Since the currents of warm air will promote rapid drainage and complete efficient drying of the microscope slides, pipettes, and similar laboratory instruments, it is possible to operate efficiently with a smaller supply of such instruments than has herefore been possible. In addition, the instruments themselves are much more efficiently cleaned and dried and inaccuracies in laboratory results which are sometimes due to uncleansed particles of dirt, pathological material, or to the presence of moisture, can thus be completely eliminated.

It should be understood that changes and modifications in the form, construction, arrangement, and combination of the several parts of the means for drying microscope slides, pipette, and similar types of laboratory instruments may be made and substituted for those herein shown and described without departing from the nature and principle of my invention.

Having thus described my invention, what I claim and desire to secure by Letters Patent is:

1. In a microscope illuminator, a lamp housing having marginally abutting top, bottom, and side walls arranged to form a complete enclosure, a light source mounted within the enclosure and being adapted to generate substantial heat when it is lighted, said bottom wall being provided with ventilation openings for causing a current of air to pass through the housing and in so doing flow around the light source, in heat-exchange relationship therewith, the top wall being provided with a plurality of apertures in an area located generally above the light source so that the air flowing through the housing will exit upwardly through such apertures after it has become heated from the light source, said apertures being variously shaped for supporting a plurality of microscope slides, pipettes and the like, and a baffle-forming tray positioned in the path of the current of air after it has flowed around the light source whereby the current of air is caused to flow around and dry the supported microscope slides, pipettes and the like.

2. In a microscope illuminator, a lamp housing having marginally abutting top, bottom, and side walls arranged to form a complete enclosure, a light source mounted within the enclosure and being adapted to generate substantial heat when it is lighted, said bottom wall being provided with ventilation openings for causing a current of air to pass through the housing and in so doing flow around the light source in heat-exchange relationship therewith, the top wall being provided with a plurality of apertures in an area located generally above the light source so that the air flowing through the housing will exit upwardly through such apertures after it has become heated from the light source, said apertures being variously shaped for supporting a plurality of microscope slides, pipettes and the like, and a baffle-forming tray suspended in the housing in downwardly spaced relation to the top wall and beneath the apertured area thereof, said tray being positioned in the path of the current of air after it has flowed around the light source whereby the current of air is caused to flow around and dry the supported microscope slides, pipettes and the like.

3. A device for drying microscope slides, pipettes and the like comprising a housing having marginally abutting top, bottom, and side walls arranged to form a complete enclosure, a heat source mounted within the enclosure, said bottom wall being provided with ventilation openings for causing a current of air to pass through the housing and in so doing flow around the heat source in heat-exchange relationship therewith, the top wall being provided with a plurality of apertures in an area located generally above the heat source so that the air flowing through the housing will exit upwardly through such apertures after it has become heated from the heat source, said apertures being variously shaped for supporting a plurality of microscope slides, pipettes and the like, and tray-like means mounted within the top portion of the enclosure in downwardly spaced underlying relation to the apertures so as to engage the lower ends of said microscope slides, pipettes, and the like and thereby co-operate in supporting same, said last named means being positioned in the path of the current of air after it has flowed around the heat source whereby the current of air is caused to flow around and dry the supported microscope slides, pipettes and the like.

4. A device for drying microscope slides, pipettes and

the like comprising a housing having marginally abutting top, bottom, and side walls arranged to form a complete enclosure, a heat source mounted within the enclosure, said bottom wall being provided with ventilation openings for causing a current of air to pass through the housing and in so doing flow around the heat source in heat-exchange relationship therewith, the top wall being provided with a plurality of apertures in an area located generally above the heat source so that the air flowing through the housing will exit upwardly through said apertures after it has become heated from the heat source, said apertures being variously shaped for supporting a plurality of microscope slides, pipettes and the like in vertical position, and an imperforate tray suspended within the housing directly above the heat source and in downwardly spaced relation to the apertures, said tray being substantially smaller than the interior size of the housing so that at least some of its edges stand away from the adjacent interior faces of the housing side walls, said tray furthermore being somewhat larger in area than the apertured area of the top wall so as to be disposed as a downwardly spaced bottom wall across all of said apertures and supportingly engage the lower ends of the microscope slides, pipettes, and the like which are disposed in said apertures whereby to heat said microscope slides, pipettes, and the like by direct transmission and at the same time cause the current of air, after it has flowed around the heat source, to flow externally around and dry the supported microscope slides, pipettes and the like.

5. In a microscope illuminator a housing having top and bottom walls respecitvely provided with apertures to permit the passage of air through the housing, some of the apertures of the top wall being adapted to receive and hold upright microscope slides, pipettes and the like, a light source operatively mounted within the housing and

being adapted to generate substantial heat when it is lighted, and a tray mounted within the housing beneath the apertures of the top wall to support the lower ends of the microscope slides, pipettes and the like held in said apertures, so that said microscope slides, pipettes and the like will be held upright in, and project externally upwardly from, the top wall so as to be dried by, the air passing through said apertures and out of the housing after such air has been heated by the light source.

6. In a microscope illuminator a housing having top and bottom walls respectively provided with apertures to permit the passage of air through the housing, some of the apertures of the top wall being adapted to receive and hold upright microscope slides, pipettes and the like, a light source operatively mounted within the housing and being adapted to generate substantial heat when it is lighted, and a tray mounted within the housing directly above the lamp and beneath the apertures of the top wall to support the lower ends of the microscope slides, pipettes and the like held in said apertures, so that said microscope slides, pipettes and the like will be held upright in, and project externally upwardly from the top wall so as to be dried by, the air passing through said apertures and out of the housing after such air has been heated by the light source.

References Cited in the file of this patent

UNITED STATES PATENTS

1,432,839	Carey	Oct. 24, 1922
1,564,917	White	Dec. 8, 1925
1,581,426	Coons	Apr. 20, 1926
1,827,479	Lierman	Oct. 13, 1931
2,282,070	Mahannah	May 5, 1942
2,623,301	Weiskopf	Dec. 30, 1952