June 21, 1960 M. MORRISON 2,942,163

CONSTANT-IMPEDANCE ALTERNATING CURRENT RELAY MOTOR-DEVICES

Filed Jan. 15, 1958

Fig. 2

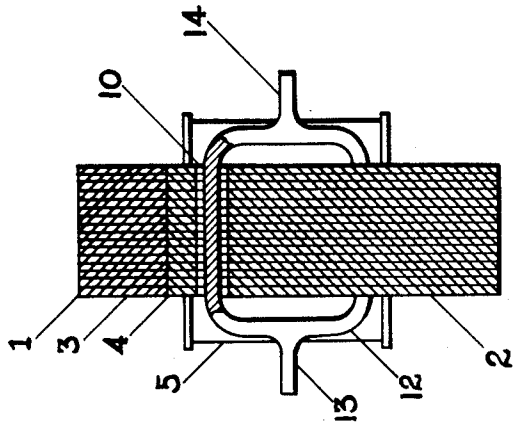

Fig. 1

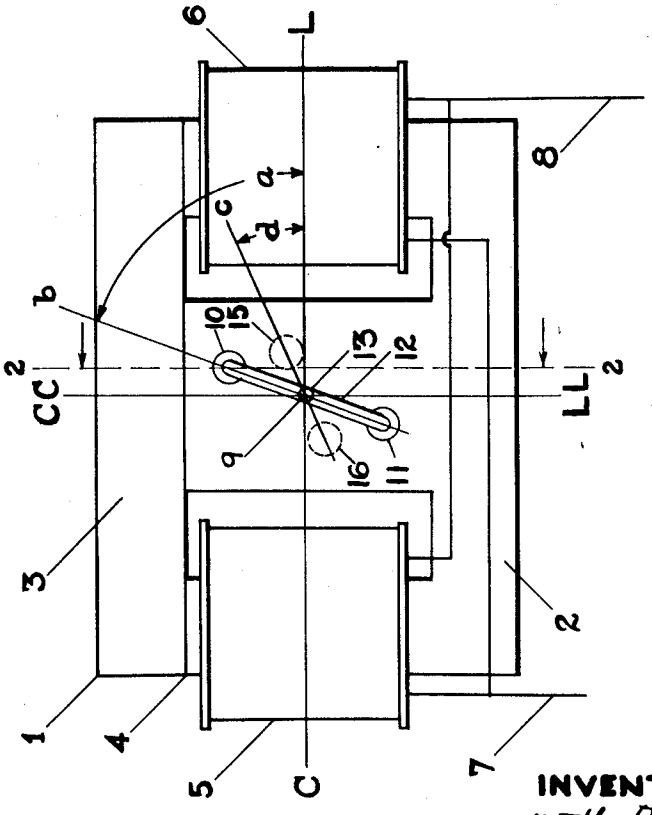

INVENTOR

Marshall Morrison

United States Patent Office 2,942,163
Patented June 21, 1960

2,942,163

CONSTANT-IMPEDANCE ALTERNATING CURRENT RELAY MOTOR-DEVICES

Montford Morrison, 1624 Flamingo Drive, Orlando, Fla.

Filed Jan. 15, 1958, Ser. No. 709,131

6 Claims. (Cl. 317—166)

The present invention relates in general to electric motor-devices drivable by alternating current or by impulsed current; it relates more particularly to the art including repulsion motor-devices; and it relates more specifically to motor devices for contactor and relay operation where constant impedance operation is indicated.

Among the objects of the invention is to provide an oscillatable-armature motor-device for contactor operation which presents a substantially constant impedance to applied alternating voltages under operation of the device.

A further object of the invention is to provide an alternating current drivable contactor motor-device which may have continuous current present in its input circuit without operating effect upon the device.

A further object of the invention is to provide a contactor-motor-device which differentiates between impulse or alternating voltages and continuous voltages for operation thereof.

A further object of the invention is to provide a contactor-motor-device which may function in the plate circuit of an electronic tube amplifier organization, simultaneously as a transformer and as a contactor-motor-device, thereby eliminating several organization components required in the prior art.

A further object is to provide a contactor-motor-device having an impedance sufficiently constant for successful employment in the plate circuits of tuned-plate-circuit amplifiers to permit selective frequency contactor operation directly without circuit organization components intervening between the plate circuit of the amplifier and a driven contactor-motor-device.

Further and other objects will be pointed out and obvious to those skilled in the art through the course of the specification when read in connection with the accompanying drawing.

A noteworthy nature of the invention resides in a repulsion type of alternating current motor in which the conductive member of the armature rotates through a restricted angular degree without any ferromagnetic material necessarily accompanying the rotation.

A further nature of the invention resides in the armature conductor material penetrating through the core of the stator.

A still further nature resides in an electric motor having a rotatable armature without the necessity of an air gap in the magnetic field circuit.

Important novel differentiation of the present invention over the pertinent prior art can be pointed out with advantage by citing two representative disclosures in that art and examining the present invention in the light of these two disclosures. The two disclosures taken for citation are:

The socalled simple repulsion motor as described in many publications including the book by C. G. Veinott, Fractional Horsepower Motors, page 181, McGraw-Hill Book Company Inc., 1939, which type of motor will be referred to herein as "repulsion motor," and;

The socalled induction instrument (electrical indicating) as also described in many publications including the book by F. A. Laws, Electrical Measurements, page 450, McGraw-Hill Book Company Inc., 1917, and which type of motor-device will be referred to herein as "eddy current motor."

It is admittedly true that the repulsion motor can be made to operate contactor mechanisms by limiting the rotation of the armature to narrow limits and employing the locked rotor characteristics of the machine for operation. However such a machine has a multi-turn wound slotted armature, a multiplicity of commutator bars with connections thereto, brushes with rigging therefor, and a relatively high moment of inertia, all of which are eliminated by an embodiment of the present invention. The necessity of a comparatively large air-gap being required in the repulsion motor magnetic circuit, prevents the structural requirements of a high impedance device, such as is advantageous in contactor and relay operation. The impedance of the repulsion motor magnetic circuit as indicated by "measuring the locked-rotor torque—which varies considerably with rotor position" (Veinott page 183), cannot be considered therefore as a constant impedance device, which the present invention provides.

It is admittedly true that the eddy current motor is a constant impedance device, but its operation requires the production of a rotating field; it is a comparatively low impedance device because of the large air-gap required in the magnetic circuit of the motor. It is true that the armature magnetic material does not accompany the revolution of the armature, but the inherent structure of the armature organization precludes the structural employment of a closed loop armature. While it may be said that the eddy currents in the hollow cylindrical armature of the eddy current motor, form closed loops of eddy currents in their circulation, it cannot be said validly that the armature comprises a closed loop structure, as understood by definitions employed in the art.

Having described important natures of the invention, a specific example embodying the novelty claimed, will be taught in detail.

Since the operational characteristics of the socalled miniature types of electric motors cannot be usually judged by comparison with the much larger types, an idea of the size of motor described in the specification as a specific example taught hereunder, will be given.

The motor to be described is drawn full size on the accompanying drawing and for clearness the motor housing and shaft bearings are omitted. The drawing is a fairly accurate scale drawing of the reduction to practice model, but is not a design economically suited to production.

Referring to the drawing Fig. 1 is a side elevation of a motor embodying the invention—minus motor housings and shaft bearings, and Fig. 2 is a cross section of Fig. 1, taken through a plane represented by the dotted line between 2—2, and looking in the direction of the arrows.

In order to construct a working example of the invention, some standard transformer and standard motor parts may be employed, though it will be observed that the use of such parts in production motors embodying the invention are not the best indicated.

Referring to Fig. 1, 1 is a stator core formed of Allegheny Ludlum Steel Corporation #25 gauge high silicon steel type EI–138 transformer core punchings, in which 2 is the E member and 3 is the I member, as shown also in Fig. 2.

In the drawing the core laminations are shown as as-

sembled in a butt-joint form, but a lap-joint may be employed where indicated.

In cases where no unidirectional flux is present in the stator core, a lap-joint may be indicated as it provides in such a case a higher inductance than a core with a butt-joint.

However where the motor stator core has unidirectional flux present in it such as when the winding is in the plate circuit of a single tube electronic amplifier, a butt-joint assembly of the laminations may be indicated.

Fig. 1, **5** and **6** standard wound spools for continuous duty for Barber-Coleman Company type KYAB 784–4 115 volts 60 cycle motors. Windings **5** and **6** are connected in parallel as shown and are provided with combined line leads **7** and **8**.

The reason for employing two stator coils, was to obtain in a reduction to practice model, a balanced flux in the center leg of the stator, though in practice generally a less expensive single coil structure is indicated.

In the operation to be discussed hereinafter, the actual core comprising the E and I laminations were assembled by single lapping of the punchings, as is well understood in the art.

For purposes of teaching the structural form of the armature and its relation to the stator core, the stator core may be considered as divided by an imaginary horizontal center line C—L and an imaginary vertical center line CC—LL, the lines having an intersection at the point **9**, locating the center point of the center leg of the assembled core, as well as the center point of the core itself.

The core has holes **10** and **11** in it, Figs. 1 and 2, and through these holes is inserted a closed loop armature **12**, having shafts **13** and **14**. The armature is obviously inserted through the holes as an open loop and then welded, soldered or otherwise formed into a closed loop as illustrated in the figures.

The holes **10** and **11** are somewhat larger than the size of the armature bar material inserted into these holes, which permits the armature **12** to oscillate about its shaft center **9** to a limited degree. The magnitude of this degree is determined by the amount of rotation that is required to impart the motor energy through the motor shaft or through other parts of the armature structure to the work-demand.

The angle between the center line C—L and the plane of the armature *b* is determined by the torque-current characteristics desired of the motor.

The holes in the stator through which the armature is inserted may have other positions than those shown at **10** and **11**. For instance, these holes may have the positions **15** and **16**, in a plane *c*, making an angle *d* with the center line C—L.

In any case the stator armature-holes should be located in such positions that magnetic flux may pass around the inserted armature conductor structure as well as through the loop thereof, if and when the operation of the motor requires it to do so.

If and when the angle *a* is reduced to a smaller value such as *d*, the radial dimension of the armature may have to be reduced accordingly, as will be understood by those skilled in the art.

Some weak torque with a high armature current can be obtained by having the armature embrace the entire center leg of the stator core, but the following description of the operation of the device will be based upon the structural organization shown in the drawing.

The operation of this device resembles that of a plain repulsion motor in some ways.

The hard or live neutral position of the armature would lie in a plane represented by the center line C—L, if the stator holes permit the plane of the armature **12** to assume this position. The soft or false neutral position of the armature would lie in a plane represented by the center line CC—LL, if the stator holes permit the plane of the armature to assume that position.

In the armature position *b*, the torque is low and the armature current is low. In an armature position *c*, the torque would be higher and the armature current would be higher.

As to whether an armature angle such as *b*, should be selected or one such as *c* selected, will depend upon the torque requirements, the allowable armature current and its permissible duration.

The torque is further influenced by the armature resistance, which of course involves its dimensions and the material used for its electrical conduction.

Since the armature does not necessarily carry any iron with it, the moment of inertia is inherently comparatively low.

If extremely low moments of inertia are desired, one of metals for the armature conductor material of low specific gravity may be employed, such as aluminum for instance.

Where the motor is used to operate an electrical contactor, it has been found that an angular degree of freedom of 10 degrees for the armature, in many cases, is the maximum required and in some cases, a lesser degree of freedom has been found to be sufficient.

In the reduction to practice model illustrated, the angle *a* is 70° and the degree of freedom of the armature is plus and minus 5°. In another example the angle *c* was 20° and the degree of freedom of the armature was also plus and minus 5°, which is within the range of maximum locked rotor torque for a plain repulsion motor.

The direction of the torque of the armature, in the examples constructed, including the one shown in the drawing, follows that found in the plain repulsion motor, namely in the direction of the angle of shift of the plane of the mean position of the effective armature conductors from the hard or live neutral position and in Fig. 1, that direction of torque is counter-clockwise.

Obviously if the armature is to deliver load within the limited range of rotation available to it, there has to be somewhere in the load organization, means for returning the armature position by counter-torque to a position where it may be rotated again by armature torque. Any suitable means of supplying this counter-torque may be employed, including mechanical spring action, armature bounce or the equivalent of any of these forces, as well as magnetic circuit arrangements and otherwise. It is believed that such methods are old and well known in the art, and do not require description herein.

The term "stator" as used herein is hereby defined as meaning any and all non-rotatable ferromagnetic material members in the magnetic circuit of a motor-device, including members which may resemble conventional armatures structurally, but which are operationally in static relation with other stator members.

I claim:

1. In a motor-device drivable by alternating current, a stator core of magnetizable material, a primary stator winding embracing said core, an armature having a winding comprising a closed loop of electrically conductive material, and said armature embracing a part of the cross section of said stator core and a part thereof.

2. In a motor-device driveable by alternating current, a stator core of magnetizable material, a primary winding embracing said core, an armature having a winding comprising a closed loop of electrically conductive material, said armature embracing a part of the cross section of said stator core and a part thereof only, and a part of said core surrounding a part of said conductive material and a part thereof only.

3. In a motor-device drivable by alternating current, a core of ferromagnetic substance comprising a magnetic circuit for both a primary electrical input winding and

for a secondary magnetically-induced armature winding, said winding comprising a closed loop of electrically conductive material forming an armature, and said armature being free to oscillate within a restricted range of movement independently of ferromagnetic substance, and said range of movement lying entirely within a cross-sectional area of said core.

4. In a motor-device drivable by alternating current, a stationary core of magnetizable material having continuous ferromagnetic material in sectional areas of said core, a stator winding for said core, an armature having a winding comprising a closed loop of electrically conductive material, and said loop having a conductive path through the body of said core in one of said continuous sections and said loop free to oscillate therewithin.

5. In a motor-device drivable by alternating current having a wound stator and an oscillatable armature, a stator core, a primary input winding therefor, an armature comprising a closed loop of electrically conductive material, and said closed loop being substantially free of magnetizable material and passing through a conduit

tube in said core, and said tube being completely surrounded by magnetizable material of said core.

6. In a motor-device drivable by alternating current having a stator and an armature, a stator core of magnetizable material comprising a substantially continuous magnetic circuit for said motor-device, a primary input winding embracing said core, an inductively coupled armature comprising a closed loop of electrically conductive material, said closed loop being electrically oscillatable physically independent of said core material, and the oscillation of said loop being limited to movement entirely within a cross-sectional area of said core.

References Cited in the file of this patent

UNITED STATES PATENTS

2,064,018	Leyland	Dec. 15, 1936
2,793,266	Reichard	May 21, 1957

FOREIGN PATENTS

545,903	Germany	Mar. 7, 1932