United States Patent

[11] 3,616,915

[72] Inventor **Robert A. Whitlock**
Rockford, Ill.

[21] Appl. No. **824,873**
[22] Filed **May 15, 1969**
[45] Patented **Nov. 2, 1971**
[73] Assignee **Aquamatic Inc.**
Rockford, Ill.

[54] **AUTOMATIC FILTER CONTROL**
6 Claims, 6 Drawing Figs.

[52] **U.S. Cl.** **210/108,** 210/138, 210/169
[51] **Int. Cl.** **B01d 29/38**
[50] **Field of Search** 210/108, 138, 169; 137/315–329.06, 399, 625.27

[56] **References Cited**

UNITED STATES PATENTS

582,399	5/1897	Stifel	210/108
2,858,024	10/1958	Babcock	210/108
3,202,170	8/1965	Holbrook	137/625.27 X
3,237,640	3/1966	Whitlock et al.	137/399
3,326,239	6/1967	Saint Joanis et al.	137/625.27 X
3,360,907	1/1968	Clark, Jr. et al.	210/108 X
3,465,782	9/1969	Parkinson et al.	137/329.01 X
3,465,881	9/1969	Rogers	210/138 X
3,512,644	5/1970	Nash	210/108

Primary Examiner—Frank A. Spear, Jr.
Attorney—McCanna, Morsbach, Pillote & Muir

ABSTRACT: A filter tank is provided for filtering the water from a swimming pool which is circulated by a pump. A valve is movable between a filtering position and a backwash position in which the flow through the tank is reversed to clean the filter. An electric motor and a hydraulic actuator are disclosed as prime movers for the valve. A control senses the pressure on both sides of the filter and actuates the primer mover when a preselected pressure differential is reached. A hydraulic timing means is associated with the control to time the backwash. The valve is a multiport valve built up of two pair of individually molded plastic members. Each member is arranged to interfit with an adjacent member and provide a valve seat at the juncture.

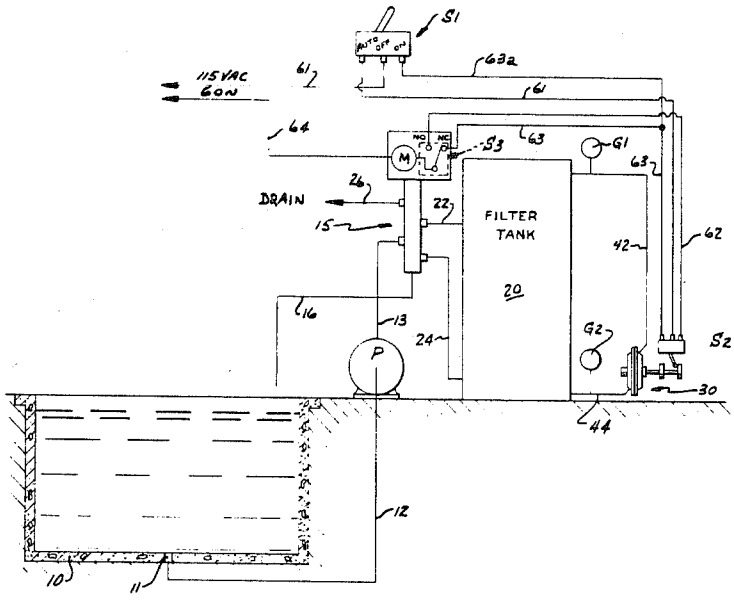

PATENTED NOV 2 1971

3,616,915

SHEET 1 OF 3

Fig. 1.

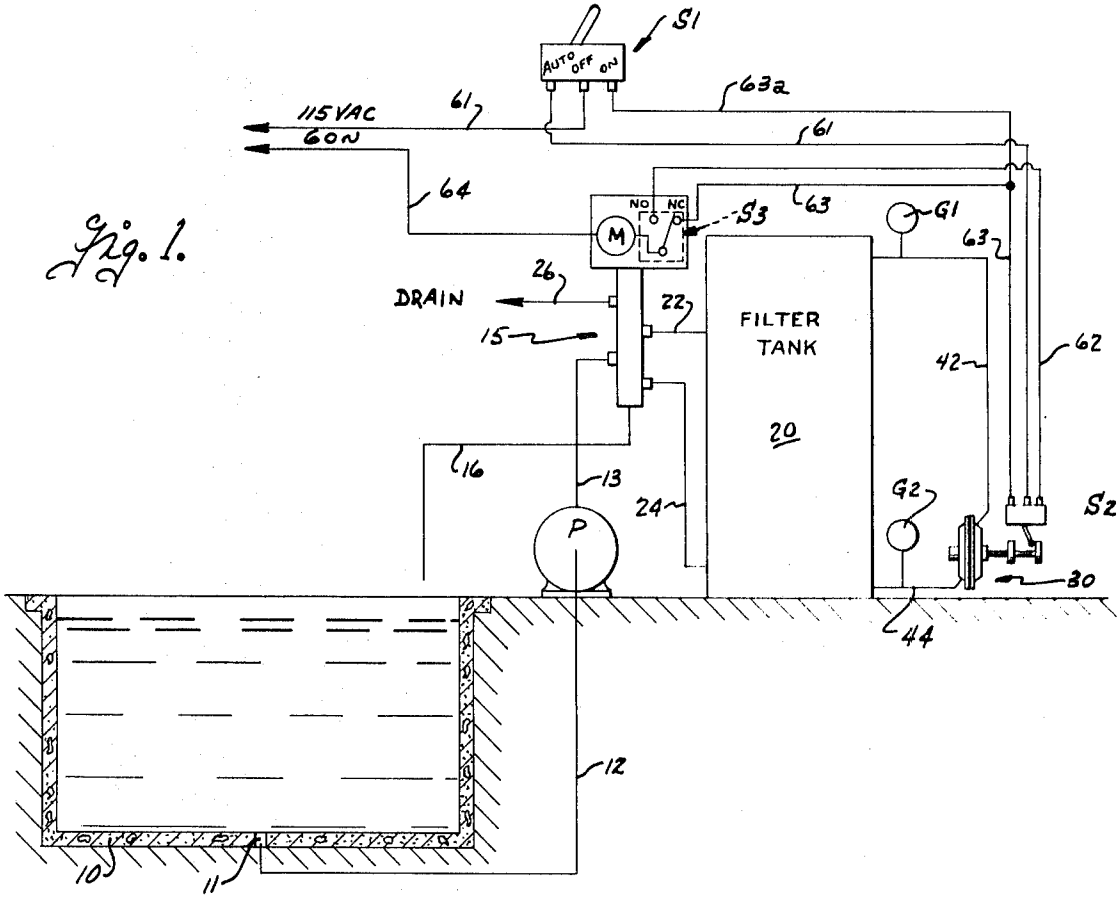

Fig. 2.

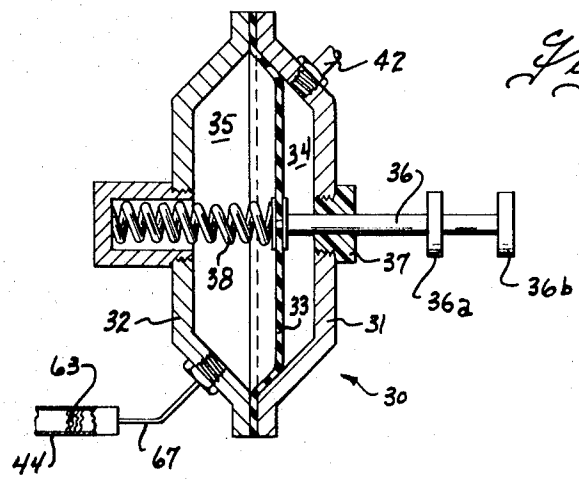

Inventor
Robert A. Whitlock

By
McCanna, Morsback, Pillote & Muir
Attorneys

Fig. 3.

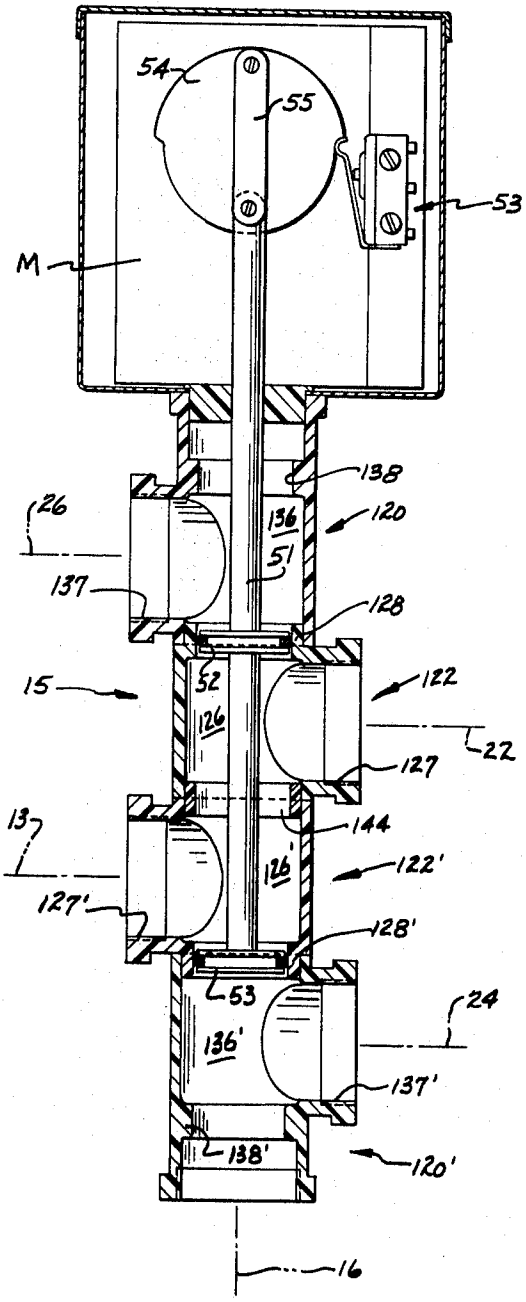

Fig. 4.

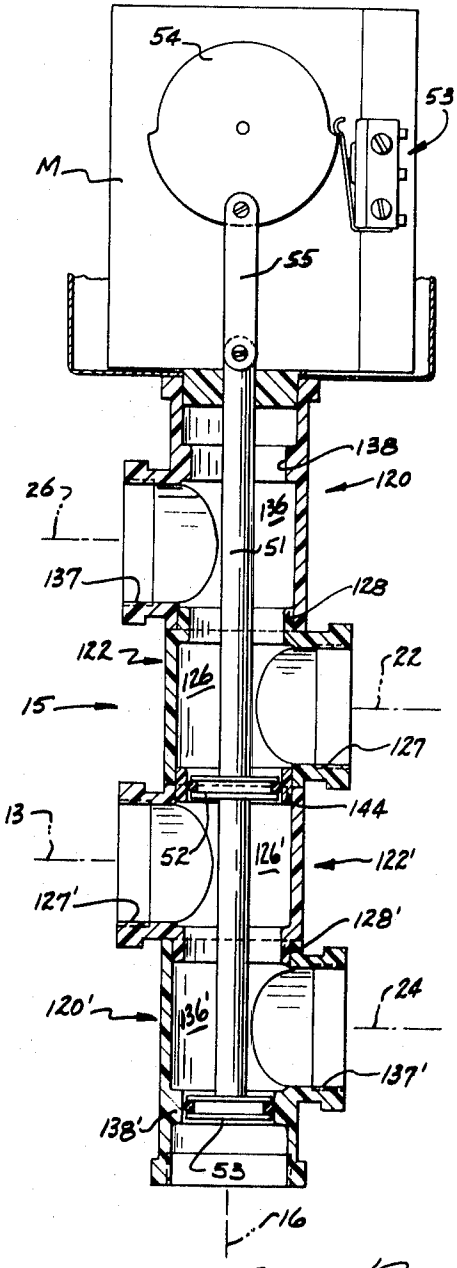

Inventor
Robert A. Whitlock

By
McCanna, Morsbach, Pillote + Muir

Attorneys

Fig. 5.

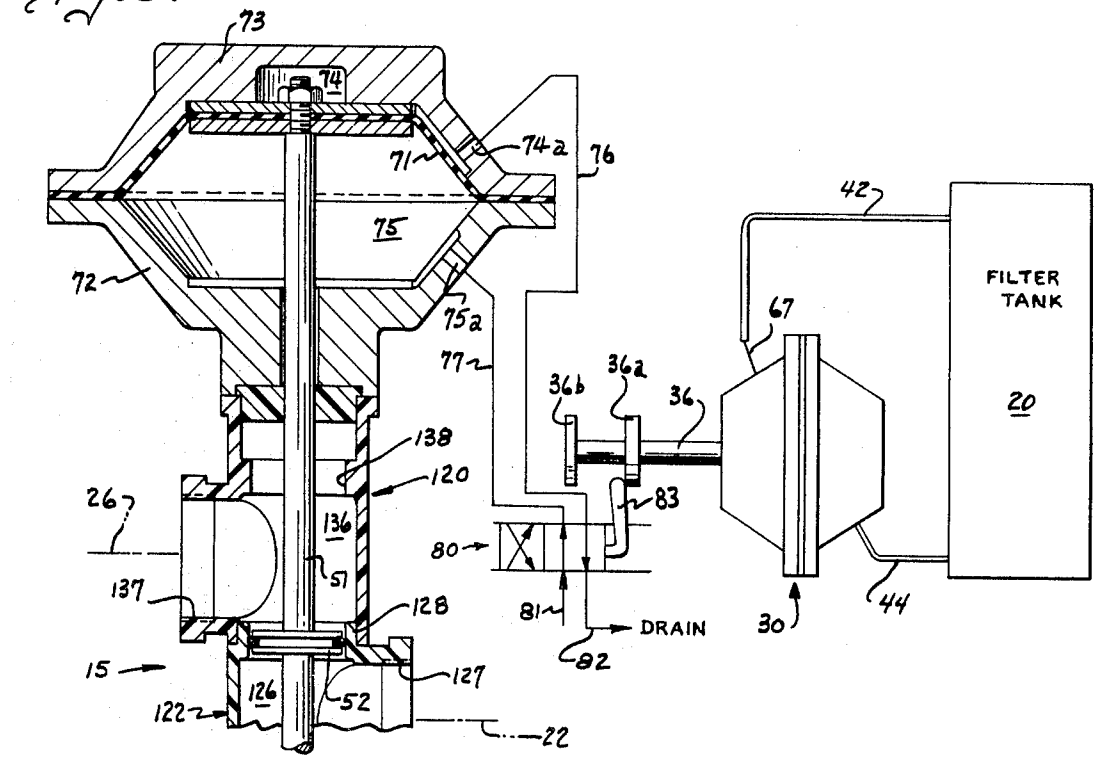

Fig. 6.

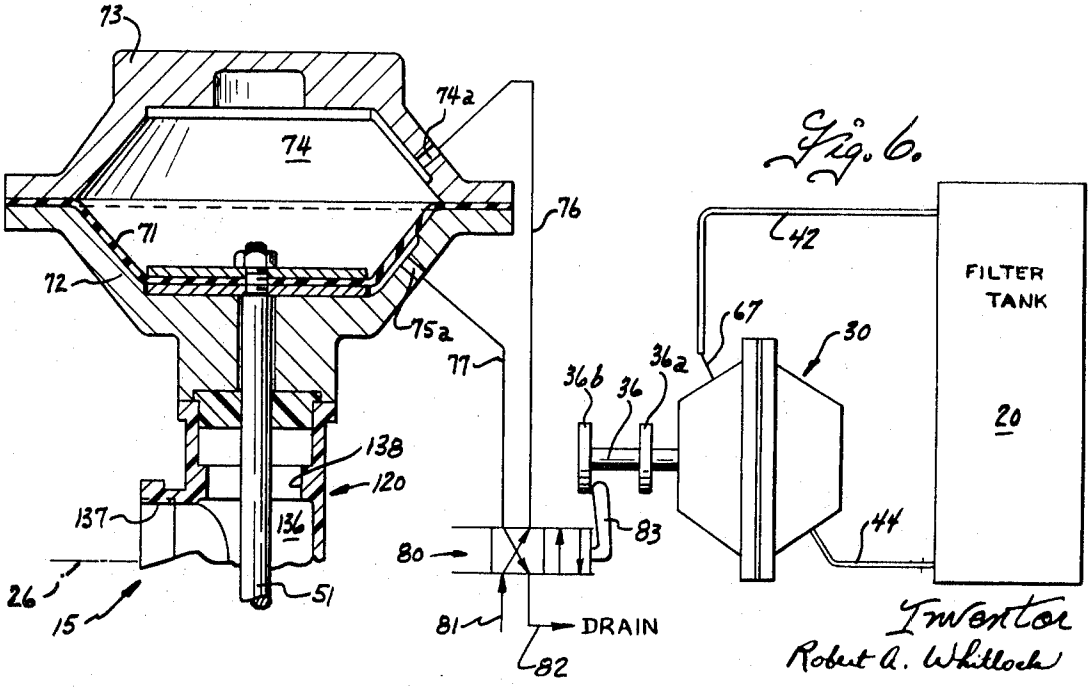

Inventor
Robert A. Whitlock

By
McCanna, Morsbach, Pillote & Muir
Attorneys

AUTOMATIC FILTER CONTROL

BACKGROUND

The invention pertains to the art of liquid purification or separation, and more specifically to automatic controls for filter cleaning.

Filters become clogged or fouled from use and it is necessary to backwash them from time to time to maintain efficiency. Backwashing can be accomplished by manipulation of manual valves, or by timing devices that operate at a predetermined time. Obviously a filter may quickly accumulate impurities or it may require a considerable length of time before a backwash is needed. With the use of automatic timing devices or by manual valves, the filter may need cleaning long before it is backwashed or, on the other hand, it may not need cleaning at the time of backwashing. Thus it is preferable to backwash at the time a predetermined amount of sludge or impurities have been accumulated in the filter.

SUMMARY

The present invention relates to improvements in automatic filter controls. The invention is realized by the provision of a filter tank with filter means, a valve for controlling flow through the filter tank, pressure responsive means operatively connected to the filter tank to sense the pressures on both sides of the filter means to initiate movement of the valve to the backwash position when a predetermined pressure differential is reached, and fluid operated timing means associated with the pressure responsive means to time the period of backwash. Another aspect of the invention relates to an improved multiport valve construction which is disclosed as usable with automatic filter controls.

It is an object of the present invention to provide an apparatus for use in combination with filters that will automatically cause the filter to be backwashed after the filter has collected a predetermined amount of foreign matter.

Another object is to provide an automatic filter control which is operative without regard to variations in supply pressure.

A further object is to provide an automatic filter control in which backwash is timed by fluid operated timing means.

A still further object of the present invention is to provide an improved multiport valve construction which is built up, at least in part, of identical plastic members.

These and other objects and advantages of the present invention will become apparent from the following detailed description taken together with the drawings.

DRAWING

FIG. 1 is a generally diagrammatic view of one embodiment of the present invention utilized in conjunction with a swimming pool;

FIG. 2 is an enlarged sectional view through the pressure-responsive means and illustrating the fluid operated timing means associated therewith;

FIGS. 3 and 4 are enlarged sectional views of the valve and adjacent controls of the embodiment of FIG. 1 and respectively illustrating the filtering and backwash positions; and

FIGS. 5 and 6 are views, partially sectional and partially diagrammatic, of another embodiment of the invention and respectively illustrating the filtering and backwash positions.

DESCRIPTION

Reference is now made more particularly to the drawings wherein the same reference characters indicate the same parts throughout the several views.

Referring to FIG. 1, a swimming pool 10 has an outlet 11 adjacent its bottom. A pipe 12 is connected to the outlet 11 and leads to the inlet of the pump P. Another pipe 13 is connected to the outlet of the pump P and to the inlet of a multiport valve 15; which outlet is adjacent the bottom thereof in the embodiment illustrated. A filter tank 20 has an inlet pipe 22 communicating therewith adjacent its top and an outlet pipe 24 communicating therewith adjacent its bottom. The filter tank has a filter (not shown) intermediate the inlet and outlet pipes for filtering a fluid passed therethrough in one direction from the inlet to the outlet. Pipes 22 and 24 are connected to the multiport valve 15, as shown. In ordinary operation, the pump pumps the water from the swimming pool through pipes 12, 13 and 22 to the top of the filter tank and the filtered water is returned to the swimming pool through pipes 24 and 16. As previously indicated, the filter accumulates foreign materials in the filtering operation and may be cleaned by a backwash operation. In the backwash operation, the multiport valve 15 is moved to a backwash position (hereinafter described) in which fluid from the pump is passed through lines 13 and 24 to the bottom of the filter tank 20. The effluent is then passed through pipes 22 and the multiport valve 15 to a drain pipe 26.

In accordance with the present invention apparatus is provided for determining when such backwash is required and to initiate movement of the multiport valve to the backwash position. For this purpose, there is provided a pressure-responsive means generally indicated at 30. In the embodiment illustrated in FIG. 2, the pressure-responsive means 30 is in the form of a diaphragm actuator which includes housing portions 31 and 32 which clamp a diaphragm 33 therebetween. The diaphragm 33 is movable in the housing and divides the same into chambers 34 and 35. A shaft 36 is secured to the diaphragm 33 for movement therewith and extends outside of the housing through a bushing 37 in housing portion 31. Fingers 36*a* and 36*b* are mounted on rod 36 for a purpose hereafter explained. In this embodiment, a compression-type spring 38 is disposed in chamber 35 and resiliently urges the diaphragm 33 to the right as viewed in FIG. 2. It is deemed obvious that the spring may be otherwise arranged to achieve the same result; for example, there may be one or more tension springs attached to rod 36. A conduit 42 communicates with chamber 34 and with the top of the filter tank 20. Similarly, a conduit 44 communicates with chamber 35 and with the bottom of the filter tank. In this manner, the pressure-responsive means 30 is operatively connected to the filter tank to sense the pressures on both sides of the filter. As seen in FIG. 1, gauges G1 and G2 are attached to conduits 42 and 44, respectively. As the filter becomes clogged, the difference in pressures as indicated on gauges G1 and G2, will increase. As this pressure differential increases, the diaphragm 33 is moved to the left as viewed in FIG. 2. Thus, by selecting the strength of spring 38 and the location of finger 36*b*, one can establish the predetermined pressure differential at which the pressure responsive means 30 operates.

In one embodiment, the multiport valve 15 is provided with a valve stem 51 having valve elements 52 and 53 mounted thereon. A motor M is operatively connected to the valve stem 51 through a rotatable cam 54 and a length 55 to move the valve stem and valve elements between the filtering position (FIG. 3) and the backwash position (FIG. 4). A circuit is provided to supply power to the motor M. The circuit includes a power line 61 in which is interposed a switch S1. Power line 61 leads to a double-throw switch S2 adjacent the pressure responsive means 30 to be thrown by fingers 36*a* and 36*b*. Lines 62 and 63 lead from switch S2 to a second double-throw switch S3 adjacent the motor M. The motor is also connected to a ground line 64. In operation, the aforedescribed pressure-responsive means 30 is moved to the left (as seen in FIG. 2) by said pressure differential. Finger 36*b* is arranged to throw switch S2 and connect power line 61 to line 63 when the preselected pressure differential is reached. Switch S3 is normally closed with respect to line 63 and thus completes the circuit to the motor M. The motor M will then drive cam 54 through 180 degrees and thereby move the multiport valve to the backwash position. At the backwash position, the cam 54 is arranged to throw the double-throw switch S3 to its second position thereby breaking the circuit and stopping the motor.

A fluid operated timing means is provided in association with the pressure-responsive means **30** to control the time that the multiport valve remains at the backwash position. For this purpose, a capillary tube **67** is interposed in conduit **44** to limit the flow of fluid back into chamber **35**. Preferably, a fine mesh screen **68** is arranged at the end of capillary tube **67** to prevent the entry of particles which might clog the tube **67**. It has been found that a capillary tube **67** having a bore on the order of 0.014 inch and a length about 4¼ inches gives a refill time of about 3 minutes over a wide pressure range. In other words, this apparatus will provide a backwash of about 3 minutes. It will be understood, however, that the length of time of backwash will be determined by many variants and will depend primarily on the design of the total system. During backwash, the diaphragm **33** moves to the right as shown in FIG. **2** and at the preselected time, stop **36***a* will throw double-throw switch S2 and complete a circuit from power line **61** through line **62** and switch S3 to motor M. The motor will then rotate cam **54** through an additional 180 degrees until switch S3 is thrown to its original position.

In the embodiment illustrated, switch S1 may also be thrown to complete a circuit to line **63***a* which is connected to line **63**. In this manner, a circuit is immediately completed to the motor M to effect backwash independent of the pressure-responsive means **30**. After backwash has been completed, the switch S1 is then returned to the automatic position at which time the circuit is completed through line **61** and **62** and switch S3 to return the multiport valve **15** to the filtering position.

With the above-described apparatus, backwash is effected only when a predetermined amount of foreign matter has been accumulated on the filter, as measured by the pressure differential. With this apparatus, variations in supply pressure have no effect. Additionally, the length of time of backwash is automatically measured by a fluid operated timing mechanism which is accurate over wide ranges of supply pressure.

In another embodiment of the present invention (FIGS. **5** and **6**), the prime mover for the multiport valve **15** is fluid actuated instead of electrically actuated. In this embodiment, the valve stem **51** is secured to a diaphragm **71** which is peripherally clamped between housing portions **72** and **73** which are mounted at one end of multiport valve **15**. The diaphragm effectively divides the housing between an upper chamber **74** and a lower chamber **75**. Ports **74***a* and **75***a* communicate with the upper and lower chambers, respectively. When pressure is applied to the upper chamber **74** through port **74***a*, the diaphragm **71** is moved to the position illustrated in FIG. **6** and thereby moves the valve system **51** to the backwash position. Similarly, when pressure is applied to chamber **75** through port **75***a*, the diaphragm is moved to the position of FIG. **5** and the valve stem **51** is moved to the filtering position. Conduits **76** and **77** are connected to port **74***a* and **75***a*, respectively and to a two-position valve **80**. Another conduit **81** connects the valve **80** to the pump P; while a drain conduit **82** connects the valve **80** to drain. Valve **80** is provided with an arm **83** which is arranged for engagement by the fingers **36***a* or **36***b* to move the valve **80** between its positions. When in the position of FIG. **5**, conduit **81** is communicated with conduit **77** while conduit **76** is connected to drain. When the fluid switch **80** is in the position of FIG. **6**, this connection is reversed thereby reversing the position of the multiport valve. In this embodiment, the pressure-responsive means **30** is identical to that illustrated in FIG. **2** and the capillary tube **67** is provided in one of the conduits **42** or **44** to effectively time the length of backwash. As shown it is in conduit **42**. In this manner, the system is entirely fluid actuated and timed without any electrical controls.

The multiport valve **15** is illustrated in detail in FIGS. **3** and **4**. In this particularly advantageous embodiment, the multiport valve is an assembly of two pairs of identical plastic members. One pair of the plastic members is end members **120**, **120'**; while the pair is intermediate members **122**, **122'**. In each case, the member is arranged so that a valve seat may be molded integrally with the plastic member and yet the members are arranged so that they may be inserted into an adjacent member to make the illustrated assembly. These members have been molded from polyvinyl chloride or 30 percent glass-filled polyphenyl oxide. It is contemplated, however, that other plastic materials may be utilized. After the individual members are molded, they are assembled as illustrated, and their overlying portion connected by welding, solvent bonding, or epoxy bonding. A suitable material for this is sold under the trademark "Euralane" manufactured by Furane Plastic Inc. of Fairfield, New Jersey, and designated their supply No. 8089.

As stated above, intermediate members **122**, **122'** are identical. Member **122** has a longitudinal chamber **126** extending between the upper and lower ends thereof and has a lateral opening **127** communicating with the chamber intermediate the ends. The chamber is of generally uniform diameter and a valve seat **128**, of reduced diameter, is located at one end of the plastic member **122** and molded integrally therewith. The valve seat **128** extends beyond the end of the plastic member and has an outer diameter approximating the diameter of the chamber **126** so that the valve seat extension can be inserted into the chamber of another plastic member (for example, member **120**) in the aforedescribed assembly process. In this manner, the valve seat **128** is located at the adjacent ends of the members. Intermediate member **122'** has the same parts identified on the drawing by the same numerals followed by the same numerals followed by the postscript prime (').

End members **120**, **120'** are also identical. Member **120** has a longitudinal chamber **136** and a lateral opening **137** communicating with the chamber. The end member **120** is formed with a valve seat **138** defining a port intermediate the ends thereof. End member **120'** has the same parts identified on the drawing by the same numerals followed by the postscript prime (').

The four members **120**, **120'**, **122** and **122'** are assembled in end-to-end relationship with their valve seats coaxial to accommodate the axial movement of the valve stem **51** so that the elements **52** and **53** can close off different ports when moved between the filtering and backwashing positions. As shown, an additional valve seat is provided by ring **144** at the adjacent ends of members **122** and **122'**. Ring **144** need not be between these two members, however, since members **122** and **122'** may be assembled with one of their integral valve seat extensions inserted into the other member. In other words, the ring **144** can be at the juncture of any two adjacent members. The construction of valve elements **52** and **53** is identical to that illustrated and described in U.S. Pat. No. 3,237,640 and reference is made thereto for a detailed description.

It is now deemed obvious that the aforedescribed apparatus provides an automatic filter control which causes the filter to be backwashed after the filter has collected a predetermined amount of foreign matter and that this operation is accomplished without regard to variations in supply pressure. As has been seen, the automatic filter control of the present invention times the backwash by a fluid operated timing means. The apparatus also incorporates an improved multiport valve assembly constructed of identical molded plastic members.

While preferred embodiments of the present invention have been described, this has been done by way of illustration and not limitation, and it is to be understood that various modifications in structure will occur to a person skilled in the art.

The embodiments of the invention in which an exclusive property or privilege is claimed are defined as follows:

1. In combination with a filter tank having an inlet and an outlet, filter means in the filter tank between the inlet and outlet for filtering a fluid passed through the tank in one direction from the inlet to the outlet, valve means operable in a filtering position for directing flow of the fluid in the one direction and operable in a backwash position to reverse the flow through the filter tank to backwash the filter means, and positioning

means for moving the valve means between said positions, the improvement comprising:

a switch for controlling actuation of the positioning means;

first and second conduits operatively connected to the inlet and outlet sides of the filter tank respectively;

pressure-responsive means operatively connected to the first and second conduits to sense the pressures on both sides of the filter means and including a movable wall and means connected to the wall for throwing the switch, the wall being movable in one direction when a predetermined pressure differential is reached to throw the switch and thereby actuating the positioning means to move the valve means to the backwash position; and

a flow controller in one of said conduits to restrict flow therethrough during backwash and time the return movement of the wall, so that the wall throws the switch to return the valve means to the filtering position; the flow controller including a small diameter tubing extending at least a portion of the length of the conduit, and a fine mesh screen at an end of the tubing to prevent the entrance of particles thereinto.

2. In combination with a filter tank having an inlet and an outlet, filter means in the filter tank between the inlet and the outlet for filtering a fluid passing through the tank in one direction from the inlet to the outlet, valve means operable in a filtering position for directing flow of the fluid in the one direction and operable in a backwash position to reverse the flow through the filter tank to backwash the filter means, driving means connected to the valve means for moving the same between said positions, a circuit for carrying power to the driving means, and a switch in the circuit for controlling power to the driving means, the switch being movable to one position to control movement of the valve means to the backwash position and to a second position to control return of the valve means to the filtering position, the improvement comprising:

pressure-responsive means operatively connected to the filter tank to sense the pressures on both sides of the filter means and to throw the switch to the one position when a predetermined pressure differential is reached, and including: a housing, a wall in the housing dividing the same into first and second chambers and movable between filtering and backwash positions, means connected to the wall and movable therewith for throwing the switch between its positions, means connected to the wall for resiliently urging the same to its filtering position with a force of said predetermined pressure differential, and a conduit connecting each chamber to the filter tank so the wall is subjected to the pressures from either side of the filter means; and

fluid operated timing means associated with the pressure-responsive means for controlling the time that the switch is thrown to its second position to thereby time backwash of the filter means, and including: a flow controller in one of the conduits to restrict the flow of fluid therethrough during backwash and thereby time the return movement of the wall to the filtering position.

3. The combination of claim 2 wherein the driving means includes an electric motor for moving the valve means when current is supplied to the motor, the circuit is an electrical circuit including a two wire portion extending from the motor to adjacent the pressure-responsive means, and the switch means is in said two wire portion adjacent the pressure-responsive means to complete a circuit to the motor in each position of said wall; and including second switch means in the two wire portions operative in response to position of the valve means to break the circuit to the motor when the valve means reaches backwash and filtering positions.

4. The combination of claim 2 wherein the vale means includes a valve casing and a valve stem extending outside the casing; the driving means includes a movable wall attached to the valve stem, and means defining chambers on either side of the movable wall; and including a two-position switch having an inlet operatively connected to the pump to receive fluid under pressure, an outlet operatively connected to drain, first and second lines each connecting the valve to one of the chambers of the driving means, and the two-position switch being operative to selectively connect one chamber to the inlet and the other to drain to move the wall and valve stem between the filtering and backwash positions.

5. The combination of claim 2 wherein the flow controller includes a small diameter tubing extending at least a portion of the length of the conduit, and a fine mesh screen at an end of the tubing to prevent the entrance of particles thereinto.

6. An automatic filter control apparatus for use with a filter tank having an inlet and an outlet, a filter in the filter tank between the inlet and the outlet for filtering a fluid passed through the tank in one direction from the inlet to the outlet, a reversing valve operable in a filtering position to direct the flow of fluid in the one direction and operable in a backwash position to reverse the flow through the filter tank to backwash the filter, and positioning means for moving the reversing valve between said positions, the apparatus comprising:

a two-way switch for controlling actuation of the positioning means;

differential pressure-responsive means operatively connected to the filter tank to sense the pressures on both sides of the filter and including a housing, a movable wall in the housing dividing the same into first and second chambers which respectively receive fluid from the inlet and outlet sides of the filter tank, and means connected to the wall for throwing the switch, the wall being movable toward the second chamber when a predetermined pressure differential is reached to throw the switch and thereby actuate the positioning means to move the valve to the backwash position; and

a flow controller associated with the differential pressure-responsive means for restricting the flow of fluid into the second chamber during backwash to time the return movement of the wall and time throwing of the switch, whereby the length of backwash is hydraulically timed.