PCT WORLD INTELLECTUAL PROPERTY ORGANIZATION
International Bureau

INTERNATIONAL APPLICATION PUBLISHED UNDER THE PATENT COOPERATION TREATY (PCT)

(51) International Patent Classification 5 :
B60R 1/06, F16C 11/06

A1

(11) International Publication Number: **WO 94/26557**

(43) International Publication Date: 24 November 1994 (24.11.94)

(21) International Application Number: PCT/US94/02473

(22) International Filing Date: 8 March 1994 (08.03.94)

(30) Priority Data:
08/060,268 12 May 1993 (12.05.93) US

(71) Applicant: UNITED TECHNOLOGIES AUTOMOTIVE, INC. [US/US]; 5200 Auto Club Drive, Dearborn, MI 48126 (US).

(72) Inventors: PERRY, William, M.; 300 North Main, Palestine, OH 45352 (US). HELMER, Kerry, L.; 3995 Hollansburg-Tampico Road, Hollansburg, OH 45332 (US).

(74) Agents: HOFER, Ronald, L. et al.; Harness, Dickey & Pierce, P.O. Box 828, Bloomfield Hills, MI 48303 (US).

(81) Designated States: AU, CA, JP, KR, European patent (AT, BE, CH, DE, DK, ES, FR, GB, GR, IE, IT, LU, MC, NL, PT, SE).

Published
With international search report.
With amended claims and statement.

(54) Title: POWER PACK FOR AN AUTOMOTIVE EXTERIOR MIRROR ASSEMBLY

(57) Abstract

The present invention relates to a power pack (11) for an exterior automotive mirror assembly having a central depression (45) in its upper housing (19) whereby a large diameter pivot cup can be used. The pivot cup, of this power pack, is separate from the mirror casing and is retained by a unique spring retainer (27). The lower housing (17) comprises fastening bores for receiving bosses of said upper housing (19) and temporarily retaining said upper housing to said lower housing before mounting said power pack to a bracket of an automotive vehicle.

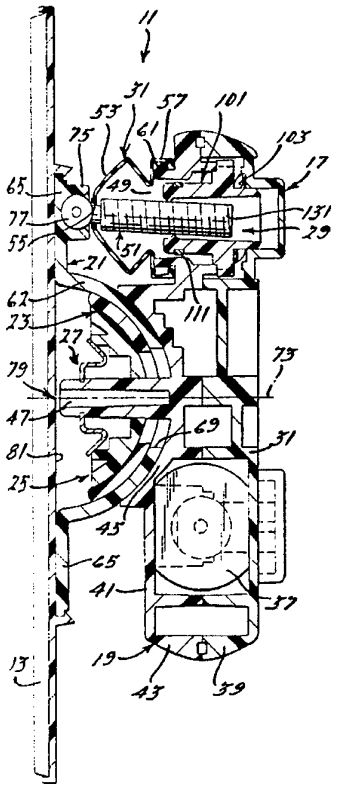

FOR THE PURPOSES OF INFORMATION ONLY

Codes used to identify States party to the PCT on the front pages of pamphlets publishing international applications under the PCT.

AT	Austria	**GB**	United Kingdom	**MR**	Mauritania
AU	Australia	**GE**	Georgia	**MW**	Malawi
BB	Barbados	**GN**	Guinea	**NE**	Niger
BE	Belgium	**GR**	Greece	**NL**	Netherlands
BF	Burkina Faso	**HU**	Hungary	**NO**	Norway
BG	Bulgaria	**IE**	Ireland	**NZ**	New Zealand
BJ	Benin	**IT**	Italy	**PL**	Poland
BR	Brazil	**JP**	Japan	**PT**	Portugal
BY	Belarus	**KE**	Kenya	**RO**	Romania
CA	Canada	**KG**	Kyrgystan	**RU**	Russian Federation
CF	Central African Republic	**KP**	Democratic People's Republic of Korea	**SD**	Sudan
CG	Congo			**SE**	Sweden
CH	Switzerland	**KR**	Republic of Korea	**SI**	Slovenia
CI	Côte d'Ivoire	**KZ**	Kazakhstan	**SK**	Slovakia
CM	Cameroon	**LI**	Liechtenstein	**SN**	Senegal
CN	China	**LK**	Sri Lanka	**TD**	Chad
CS	Czechoslovakia	**LU**	Luxembourg	**TG**	Togo
CZ	Czech Republic	**LV**	Latvia	**TJ**	Tajikistan
DE	Germany	**MC**	Monaco	**TT**	Trinidad and Tobago
DK	Denmark	**MD**	Republic of Moldova	**UA**	Ukraine
ES	Spain	**MG**	Madagascar	**US**	United States of America
FI	Finland	**ML**	Mali	**UZ**	Uzbekistan
FR	France	**MN**	Mongolia	**VN**	Viet Nam
GA	Gabon				

POWER PACK FOR AN AUTOMOTIVE EXTERIOR MIRROR ASSEMBLY

BACKGROUND OF THE INVENTION

This invention relates generally to a power pack for an automotive exterior mirror assembly and specifically to an exterior mirror power pack having a large diameter pivot cup.

Glass mirrors used in exterior mirror assemblies for automotive vehicles have become increasingly heavy due to the many added features such as electric heaters and electrochromic dimming units. This weight, when subjected to gravitational forces and the normal vehicle vibration, will create optical distortion of the mirror. This problem is exacerbated further when mirrors are used in combination with motorized power packs. However, vibration problems can be reduced in a number of ways. One such way is to use lighter weight materials. A second method is to use what is known as a "clam shell" power pack housing wherein two outer surfaces are in frictional contact, thereby dampening the mirror from vibration; this is depicted in U.S. Patent No. 4,281,899 entitled "Adjusting Device For Motor Car Mirrors", issued to Oskam on August 4, 1981, incorporated by reference herewithin. A third method to reduce mirror vibration is by use of a planetary transmission drive unit; this can be observed in U.S. Patent No. 4,116,538, entitled "Motor-Car Mirror Adjustable About Two Perpendicular Axes", issued to Oskam on September 26, 1978, incorporated by reference herewithin. A fourth method uses a partially spherically shaped pivot cup which is held in frictional contact against a housing. Examples are: U.S. Patent No. 4,696,555 entitled "Electric Remote Control Mirror Apparatus", issued to Enomoto on September 29, 1987; U.S. Patent No. 4,693,571 entitled "Support And Drive Unit For Mirror Devices", issued to Kimura on September 15, 1987; U.S. Patent No. 4,555,166 entitled "Electric Remote Control Mirror With Half-Ball Portion", issued to Enomoto on November 26, 1985; and, U.S. Patent No. 4,506,954 entitled "Motor Driven Remote Control Mirror Device With Shaft Portion Pivot Not Coincident With Shaft Axis", issued to Enomoto on March 26, 1985, all of which are incorporated by reference herewithin. Nevertheless, while these patents have improved the art, the patents using pivot cups usually have a cup with a relatively small cross sectional diameter. Moreover, these pivot cups are integrated into the mirror casings.

SUMMARY OF THE INVENTION

In accordance with the present invention, the preferred embodiment of a power pack unit for use in exterior mirror assemblies for automotive vehicles is comprised of an upper housing wherein a partially spherical depression is created centrally therewithin. More specifically, the depression in this unique upper housing extends below the planar surface created by the top of the motors contained thereunder. Therefore, the pivot cup sectional diameter can become larger without taking up increased space between the lower housing and the mirror.

A further aspect of the present invention is that the pivot cup is independent from the mirror casing. This allows for serviceability of the power pack without destroying the mirror. This is also beneficial in that the pivot cup material can be different than the ultraviolet light stabilized and colored casing material.

Another aspect of the present invention is that the upper housing can be permanently attached to the lower housing when both are fastened to the mounting bracket. Furthermore, a unique spring retainer eliminates the need for a compression spring to provide friction against the pivot cup.

BRIEF DESCRIPTION OF THE DRAWINGS

Additional features of the present invention will become apparent from the following description and appended claims, taken in conjunction with the accompanying drawings.

Figure 1 is a rear elevation view showing the preferred embodiment of the present invention automotive exterior mirror assembly and power pack;

Figure 2 is an exploded perspective view showing the present invention power pack from Figure 1;

Figure 3 is a rear elevation view showing the lower housing and drive system of the present invention power pack from Figure 1;

Figure 4 is a sectional view of the present invention power pack, taken from Figure 3 along line 4-4;

Figure 5 is also a sectional view of the present invention power pack in a pivoted position, taken from Figure 3 along line 4-4;

Figure 6 is a perspective view showing the retention means of the present invention power pack from Figure 2;

Figure 7 is a sectional view showing the drive system of the present invention power pack, taken from Figure 3 along line 7-7; and

Figure 8 is a sectional view showing a portion of the present invention power pack, taken from Figure 1 along line 8-8.

DESCRIPTION OF THE PREFERRED EMBODIMENT

The preferred embodiment of the present invention automotive exterior mirror power pack 11 serves to retain and remotely position a mirror 13. Referring to Figure 1, the power pack 11 is attached to a mounting bracket 15, both of which are encased within an aesthetically pleasing outer shell 16.

Referring to Figures 2-5, power pack 11 is comprised of a lower housing 17, an upper housing 19, a boot 31, a pivot cup 21, a pivot sleeve 23, a pivot retainer 25, a spring retainer 27 and a drive means 29. Lower housing 17 is circular in shape, having a center portion 34 which is substantially flat with ribs 33 extending upwards therefrom. Center portion 34 also contains cavities 35 for retaining a pair of motors 37 and a variety of gears. Lower housing 17 has upwardly extending walls 39 around the circumference of the part.

Upper housing 19 is located adjacent to and on top of the lower housing 17. Upper housing 19 has a generally flat top surface 41 bounded circumferentially by a downward extending wall 43. Top surface 41 contains a partially spherical depression 45 centrally located therewithin. Spherical depression 45 partially protrudes below the top horizontal plane created by motors 37. A post 47 is centrally located within spherical depression 45 and is perpendicular to top surface 41. Post 47 is integrally molded within upper housing 19. Top surface 41 of upper housing 19 has two openings 49 contained therewithin. A jack screw 51 extends upwards through each opening 49, and both openings 49 and threaded portion 113 of jack screws 51 are covered by an elastomeric boot 31. This boot 31 serves to protect drive mechanism 29 from dirt and water. Boot 31 has two upwardly directed conical projections 53 with passages 55 contained in the top side of each. Each conical section 53 has an outwardly extending bottom lip 57 therearound with

pair of lips 57 being connected by a generally flat section 59. Each lip 57 fits snugly over an outwardly extending flange 61 partially molded around upper housing openings 49. Upper housing 19 and lower housing 17 are injection molded from Noryl 844, which can be obtained from General Electric Plastics.

As can best be seen in Figure 8, upper housing 19 has three equally spaced apart compressible bosses 50 extending down below normal surface 41 of upper housing 19. A fastening bore 52 extends through each boss 50. These multiple bosses 50 serve to engage matching bosses 54 upwardly extending from central portion 34 of lower housing 17. A fastening bore 52 also extends axially through lower bosses 54. The interference fit of compressible bosses 50 into lower bosses 54 provides a temporary attachment between upper and lower housings, respectively 19 and 17. Once the entire power pack 11 is assembled, screws 141 can be driven through bores 52 and directly into mounting bracket 15, thus upper housing 19 and lower housing 17 are permanently and simultaneously attached when the entire assembly is affixed to mounting bracket 15.

Referring again to Figures 2-5, pivot cup 21 is proximately adjacent to the concave side of upper housing spherical depression 45. Pivot cup 21 has a central partially spherical portion 63 bordered by a generally flat outer rim 65. Within the center of spherical portion 63 there exists a generally square aperture 67 with rounded corners. When pivot cup 21 is assembled onto upper housing 19, upper housing post 47 extends upward through square aperture 67, and edges 69 of square aperture 67 limit the X-Y pivotal movement. A groove 71 is formed in the concave side of pivot cup spherical portion 63 and runs latitudinally from rim 65 to square aperture edge 69. At two positions on the backside of pivot cup rim 65 there are a set of cavities 75 which serve to pivotally retain top portion 77 of each jack screw 51. The inside diameter of pivot cup spherical portion 62 is approximately 37 millimeters, thereby placing pivot point 79 at the intersection of pivot axis 73 and the backside of mirror casing 81. The large size of pivot cup spherical portion 62 and the position of pivot point 79 significantly reduces optical distortion caused by vibration. Pivot cup 21 is also injection molded from Noryl 844. Boot 31 is injection molded from a Neoprene synthetic elastomer.

Pivot sleeve 23 is located on top of spherical portion 63 of pivot cup 21. Pivot sleeve 23 is partially spherically shaped on its top and bottom surfaces, respectively 84 and 86, with a substantially square orifice 82 cut centrally therein. Pivot sleeve 23 has a latitudinal rib 74 extending along bottom surface 86 thereof such that rib 74 fits within groove 71 of pivot cup 21. Rib 74 and groove 71 act coincidentally to index the pivotal motion along either the X or Y axis. A latitudinal groove 88 extends along top surface 84 of pivot sleeve 23 from a peripheral edge 90 to central square orifice 82. This groove 88 is perpendicular to rib 74. Pivot sleeve 23 is injection molded from Nylon 6/6.

Pivot retainer 25 is forcibly compressed upon top surface 84 of pivot sleeve 23. Pivot retainer 25 has a lower surface 92 which is partially spherical with a void located centrally therewithin. A rib 77 extends latitudinally along lower surface 92 and fits within groove 88 of pivot sleeve 23. This rib 77 and groove 88 cooperatively act to maintain pivotal movement along the axis perpendicular to that of rib 74 and groove 71. Moreover, top side 94 of pivot retainer 25 has structural ribbing. Pivot retainer 25 is injection molded from Nylon R400G, which can be obtained from Monsanto Corporation.

A spring retainer 27 forcibly compresses pivot retainer 25 against pivot sleeve 23, which in turn, frictionally traps pivot cup 21 between pivot sleeve 23 and upper housing 19. This downward pressure supplies pivotal control and vibration dampening for pivot cup 21. As can best be observed in Figure 6, spring retainer 27 itself comprises a central ring portion 79 with an opening 81 centrally located therewithin, six relief slots 83 radiating outward from the central opening 81, and six S-shaped spring arms 85 radiating outward and down below central ring portion 79. Inside edge 87 of central ring 79 supplies the locking action of spring retainer 27 upon the end of upper housing post 47. The downwardly pressing spring arms 85 supply the compressive force against top surface 94 of pivot retainer 25. Spring retainer 27 is stamped and formed from spring steel.

Referring to Figures 4, 5 and 7, drive means 29 acts to pivotally move the pivot cup 21 about its X and Y axes. Drive means 29 is retained between the upper and lower housings, respectively 19 and 17. The pair of motors 37 are spaced so that their rearward ends are facing toward one another with their respective drive

shafts 89 angularly facing away from each other. These motors 37 are of a standard type known to one skilled in the art. Upon each drive shaft 89, a worm gear 91 is press fit thereupon. Each worm gear 91 is injection molded from Monsanto Vydyne G.P. Nylon and has a diametrical pitch of 64, a pressure angle of 20°, a lead angle of 5°, a right hand helix, a pitch diameter of 4.5974 millimeters, an outside diameter of 5.3899 millimeters. In turn, each worm gear 91 engages upper teeth 93 of an idler gear 95. Each idler gear 95 has 24 upper teeth 93, a 64 diametral pitch, a pressure angle of 20°, a pitch diameter of 9.525 millimeters, an outside diameter of 10.319 millimeters, and a 5° right hand helix. Each idler gear 95 is axially mounted upon a pin 113 downwardly extending from upper housing 19, thereby maintaining constant angled engagement with each worm gear 91. This reduces the gearing noise. A lower teeth set 99 is axially beneath upper teeth 93. There are 12 lower teeth 99, each having a diametral pitch of 64, a pressure angle of 20°, a pitch diameter of 4.763 millimeters, an outside diameter of 5.556 millimeters and a 5° right hand helix angle. Furthermore, these lower teeth 99 engage and drive a screw gear 101. Each screw gear 101 has 44 teeth with a diametral pitch of 64, a pressure angle of 20°, a pitch diameter of 17.462 millimeters, an outside diameter of 18.254, and a 5° left hand helix angle, and is made from Vydyne G.P. Nylon. Each screw gear 101 sits upon a spring washer 103 which provides upward pressure against screw gear 101. Each screw gear 101 has a generally flat upper surface 105 with a plurality of fingers 107 extending upwards therefrom. These fingers 107 have inwardly facing points 109 and an O-ring 111 compresses each finger 107 inwards for engagement with a jack screw 51. Each jack screw has a lower threaded portion 131 having M6 by 1.0 millimeter threads. The top portion 77 of each jack screw 51 protrudes up through boot passages 55 and pivotally connects with each pivot cup cavity 75. Each jack screw 51 is also injection molded from Vydyne G.P. Nylon. Jack screw drives of this general type are shown: in U.S. Patent No. 4,940,321 entitled "Drive Unit For Electrically Driven Remote-Controlled Mirror", issued to Yoshida on July 10, 1990; in U.S. Patent No. 4,881,418 entitled "Pivotable Screw Jack Drive", issued to Fimeri on November 21, 1989; and in U.S. Patent No. 4,693,571 entitled "Support And Drive Unit For Mirror Devices", issued to Kimura on September 15, 1987, all of which are incorporated by reference herewithin.

It will be appreciated that the power pack of the present invention represents a significant improvement for automotive exterior mirror assemblies. The central depression in the upper housing and the specific motor positioning within the lower housing allow for a large diameter pivot cup to be used in a thin cross sectional mirror package. This will significantly reduce the vibrational problems which lead to optical distortion. Furthermore, the pivot cup is independent from the mirror casing thereby allowing easier serviceability and more cost effective material selections. The unique spring retainer also allows for adequate frictional dampening without requiring a separate compression spring and spring retainer. Finally, the ability to simultaneously attach the upper and lower housings, while assembling the power pack to the mounting bracket, provides a more cost effective assembly technique.

While a number of specific embodiments of this power pack have been disclosed, it will be appreciated that various modifications may be made without departing from the present invention. For example, while a spring retention means has been shown, a conventional spring retainer and compression spring can be used without departing from the present invention. Furthermore, it will be appreciated that other drive means may be employed without departing from the invention, even though a specific worm gear, idler gear, screw gear and jack screw, drive means have been disclosed. While various materials have been disclosed in an exemplary fashion, various other materials may of course be employed. It is intended by the following claims to cover these and any other departures from these disclosed embodiments which fall within the true spirit of this invention.

We Claim:

1. A power pack for an automotive exterior mirror assembly comprising:

a mirror casing for holding a mirror, said mirror casing having a non-appearance backside;

a pivot cup having a partially spherical center portion circumferentially bordered by a substantially flat rim therearound, said rim being in proximate contact with said non-appearance backside of said mirror casing;

an upper housing having a centrally located post protruding upward therefrom, said upper housing having a partially spherical depression centrally located therewithin, said upper housing spherical depression partially extending below the top horizontal plane of a pair of motors contained therewithin, said upper housing spherical depression serving to provide frictional contact with the lower surface of said pivot cup's spherical center portion, said post of said upper housing extending through an aperture within the center of said pivot cup's spherical portion;

a pivot sleeve having a partially spherical shape, said pivot sleeve being frictionally located against the top of said pivot cup's central spherical portion, said pivot sleeve having an orifice in the center thereof such that said upper housing post extends therethrough;

a pivot retainer having a partially spherically shaped lower surface, said pivot retainer being forcibly located against the top of said pivot sleeve, said pivot retainer having a void in the center thereof such that said upper housing post extends therethrough;

means for retaining attached to the top of said upper housing post, said retention means forcibly retaining said pivot retainer, said pivot sleeve, and said pivot cup against said upper housing;

a lower housing having a substantially flat central surface with ribs upwardly extending therefrom, said lower housing central surface being bordered by a raised side wall extending around the circumference thereof, said lower housing having cavities for locating said pair of motors therewithin, said lower housing having

locations for positioning a means for driving thereupon, said lower housing being retained to said upper housing by a means for attachment; and

said driving means pivotally moving said pivot cup, said pivot cup sliding between said pivot sleeve and said upper housing.

2. The power pack of Claim 1 wherein:

said mirror casing has a central portion which is substantially flat with ribs thereupon, said central portion is bordered by a lip outwardly extending therefrom; and

said pivot cup is an independent member from said mirror casing, whereby said mirror casing and said mirror, retained thereupon, can be disassembled from said pivot cup for repair.

3. The power pack of Claim 2 wherein:

each of said pair of motors has a drive shaft extending therefrom;

said lower housing holds said pair of motors, the rearward end of each of said pair of motors being angled toward each other and said drive shafts being displaced at an angle away from one another; and

said upper housing has said partially spherical depression centrally located therewithin, said upper housing spherical depression partially extends below the top horizontal plane created by said pair of motors and said upper housing spherical depression protrudes downwards into the space between said pair of motors.

4. The power pack of Claim 3 wherein said driving means comprises:

a pair of worm gears, each being attached to said drive shafts by an interference fit, said drive shafts supplying rotational movement to each of said pair of worm gears;

a pair of idler gears each having two different teeth sets axially spaced thereupon, said pair of idler gears each being axially held upon said upper housing by a pin extending downward therefrom, said pair of worm gears supplying rotational movement to each of said pair of idler gears;

a pair of screw gears each having geared teeth surrounding a lower circular portion thereof, each of said pair of screw gears having a plurality of fingers extending upwards therefrom, said plurality of fingers each having internally directed points thereupon, said pair of screw gears being located in a pair of cavities within said lower housing, each of said pair of idler gears supplying rotational movement to each of said pair of screw gears;

a pair of O-rings placed around said plurality of fingers on each of said pair of screw gears for maintaining inward pressure of said plurality of fingers;

a pair of jack screws each being externally threaded, the external threads of each providing an engagement surface thereupon with said plurality of fingers of said screw gear, said plurality of fingers supplying rotational movement to each of said pair of jack screws, said pair of jack screws each having a generally spherical top with a pin extending centrally therefrom, said pin being generally affixed perpendicular to each of said pair of jackscrews' axes; and

said pivot cup rim having a pair of pivoting and attachment cavities thereupon, whereby said pair of jack screws provides the pivotal drive means for said pivot cup.

5. The power pack of Claim 4 wherein:

said upper housing has a pair of openings, each of said pair of openings has a wall peripherally extending upward therefrom, said walls have outwardly extending partial flanges thereupon;

said pair of jack screws each protrudes upward through said pair of openings in said upper housing;

a boot has a pair of conical shapes extending upwards therefrom, each of said pair of conical shapes has passages in the top thereof, said pair of conical shapes each a lip extending generally perpendicular therebelow, said lips are connected by a substantially flat central portion; and

said boot is retained to said upper housing through a fit of said conical lip upon said upper housing opening flanges, each of said pair of jack screws extends through each of said pair of passages within said boot.

6. The power pack of Claim 3 wherein said retention means comprises a central ring portion with a central opening located therewithin, said central ring portion has a plurality of relief slots radiating outwards from the central ring portion's central opening, said central ring portion has a plurality of S-shaped spring arms radiating outwards therefrom and down below thereof.

7. The power pack of Claim 3 wherein said pivot cup has an inside diameter of at least 35 millimeters.

8. A power pack for an automotive exterior mirror comprising:

an upper housing, having a plurality of fastening bores therewithin, said upper housing having a plurality of bosses extending from the backside thereof, said bosses being hollow, said bosses being located circumferentially around each of said plurality of fastener bores, said bosses being compressible toward their axial centerline;

a lower housing, having a plurality of second fastening bores therewithin for receiving said bosses of said upper housing for temporarily retaining said upper housing to said lower housing;

a bracket, having bosses thereupon, for retaining said power pack to an automotive vehicle; and

means for permanently and simultaneously fastening said upper housing to said lower housing, and both to said bracket.

9. A power pack for an automotive exterior mirror comprising:

a mirror casing for holding a mirror, having a non-appearance backside, said mirror casing having a central portion which is substantially flat with ribs thereupon, said central portion being bordered by a lip outwardly extending therefrom;

a pivot cup having a partially spherical center portion circumferentially bordered by a substantially flat rim therearound, said rim being in proximate contact with said non-appearance backside of said mirror casing, said pivot cup being an independent member from said mirror casing;

an upper housing having a centrally located post protruding upwards therefrom, said upper housing having a partially spherical depression centrally located therewithin, said upper housing spherical depression partially extending below the top horizontal plane of a pair of motors, said upper housing spherical depression protruding downwards into the space between said pair of motors, said upper housing spherical depression serving to provide frictional contact with the lower surface of said pivot cup's spherical center portion, said post of said upper housing extending through an aperture within the center of said pivot cup's spherical portion;

a pivot sleeve having a partially spherical shape, said pivot sleeve being frictionally located against the top of said pivot cup's central spherical portion, said pivot sleeve having an aperture in the center thereof such that said upper housing post extends therethrough;

a pivot retainer having a partially spherically shaped lower surface, said pivot retainer being forcibly located against the top of said pivot sleeve, said pivot retainer having a void in the center thereof such that said upper housing post extends therethrough;

means for retention attached to the top of said upper housing post, said retention means forcibly retaining said pivot retainer, said pivot sleeve, and said pivot cup against said upper housing;

a lower housing having a substantially flat central surface with ribs upwardly extending therefrom, said lower housing central surface being bordered by a raised side wall extending around the circumference thereof, said lower housing being retained to said upper housing by a means for attachment, said lower housing having cavities for locating said pair of motors therewithin, the rearward end of each of said pair of motors being angled toward each other and a drive shaft extending from each of said pair of motors being displaced at an angle away from one another;

a pair of worm gears, each being attached to said drive shafts by an interference fit, said drive shafts supplying rotational movement to each of said pair of worm gears;

a pair of idler gears each having two different teeth sets axially spaced thereupon, said pair of idler gears each being axially held upon said upper housing by a pin extending downward therefrom, said pair of worm gears supplying rotational movement to each of said pair of idler gears;

a pair of screw gears each having geared teeth surrounding a lower circular portion thereof, each of said pair of screw gears having a plurality of fingers extending upwards therefrom, said plurality of fingers each having internally directed points thereupon, said pair of screw gears being located in a pair of cavities within said lower housing, each of said pair of idler gears supplying rotational movement to each of said pair of screw gears;

a pair of O-rings placed around said plurality of fingers on each of said pair of screw gears for maintaining inward pressure of said plurality of fingers;

a pair of jack screws each being externally threaded, the external threads of each providing an engagement surface thereupon with said plurality of fingers of said screw gear, said plurality of fingers supplying rotational movement to each of said pair of jack screws, said pair of jack screws each having a generally spherical top with a pin extending centrally therefrom, said pin being generally affixed perpendicular to each of said pair of jackscrews' axes;

said pivot cup rim having a pair of pivoting and attachment cavities thereupon, whereby said pair of jack screws provides a means for pivotally driving said pivot cup; and

said drive means pivotally moving said pivot cup, said pivot cup sliding between said pivot sleeve and said upper housing.

10. A power pack for an automotive exterior mirror comprising a means for retaining a pivot cup to a post comprising a central ring portion with a central opening located therewithin, said central ring portion having a plurality of relief slots radiating outwards from the central ring portion's central opening, said central ring portion having a plurality of S-shaped spring arms radiating outwards therefrom and down below thereof.

11. A power pack for an automotive exterior mirror comprising:

said mirror casing having a first surface adjacent to a mirror and a non-appearance backside the central portion of which is substantially flat with ribs thereupon, said central portion of said backside being bordered by a lip outwardly extending perpendicular therefrom for surrounding the edges of said mirror; and

a pivot cup having a partially spherical center portion circumferentially bordered by a substantially flat rim therearound, said rim being in proximate contact with said non-appearance backside of said mirror casing, said pivot cup being an independent member from said mirror casing, whereby said mirror casing can be disassembled from said pivot cup for repair.

[received by the International Bureau on 2 November 1994 (02.11.94) ;
original claims 10 and 11 amended ; remaining claims
unchanged (1 page)]

said pivot cup rim having a pair of pivoting and attachment cavities thereupon; and

said drive means pivotally moving said pivot cup, said pivot cup sliding between said pivot sleeve and said upper housing.

10. An apparatus which retains a pivot cup to a post in an automotive exterior mirror power pack, said apparatus comprising a central ring portion with a central opening located therewithin, said central ring portion having a plurality of relief slots radiating outwards from the central ring portion's central opening, said central ring portion having a plurality of S-shaped spring arms radiating outwards therefrom and down therebelow, said arms holding at least one intermediate member against said pivot cup.

11. A power pack for an automotive exterior mirror comprising:

said mirror casing having a first surface adjacent to a mirror and a backside oppositely disposed therefrom, said central portion of said backside being bordered by a lip outwardly extending substantially perpendicular therefrom for substantially surrounding the edges of said mirror; and

a pivot cup having a partially spherical center portion circumferentially bordered by a substantially flat rim, said rim being in snap fit engagement with said backside of said mirror casing, said mirror casing disposed between said mirror and said partially spherical center portion of said pivot cup, said pivot cup being an independent member from said mirror casing, wherein said mirror casing can be disassembled without destruction from said pivot cup for replacement.

STATEMENT UNDER ARTICLE 19

The Examiner's application of references to Claims 10 and 11 is respectfully traversed. Notwithstanding, the amended Claim 10 is patentably distinct from the combined references of Japanese Patent Abstract, Vol. 10, No. 21 (M-449) (2078) and French 2,119,772 to Grenet. The arms of Claim 10 hold at least one intermediate member against the pivot cup. In contrast, the Japanese Patent Abstract teaches the use of a screw rather than the retaining apparatus claimed in the present invention. Also, Grenet shows a retainer (30) which rides directly against a pivot cup thereby not achieving the smooth and vibration-reducing operational advantages of the present invention. The retainer of Grenet further appears to be prone to gouging into the pivot cup upon prolonged usage during the environmental extremes normally encountered by such mirrors.

The amended Claim 11 is patentably distinct from EP 0,276,677 to Murakami Kaimedo Co. The mirror casing of the present invention is disposed between the mirror and the center portion of the pivot cup to provide added adhesive area and support for the mirror. In contrast, the Murakami Kaimedo Co. reference discloses an enlarged functional aperture (16) within the mirror holder.

Thus, all of the claims searched should be deemed novel and involving an inventive step over the references cited, whether considered alone or in any combination.

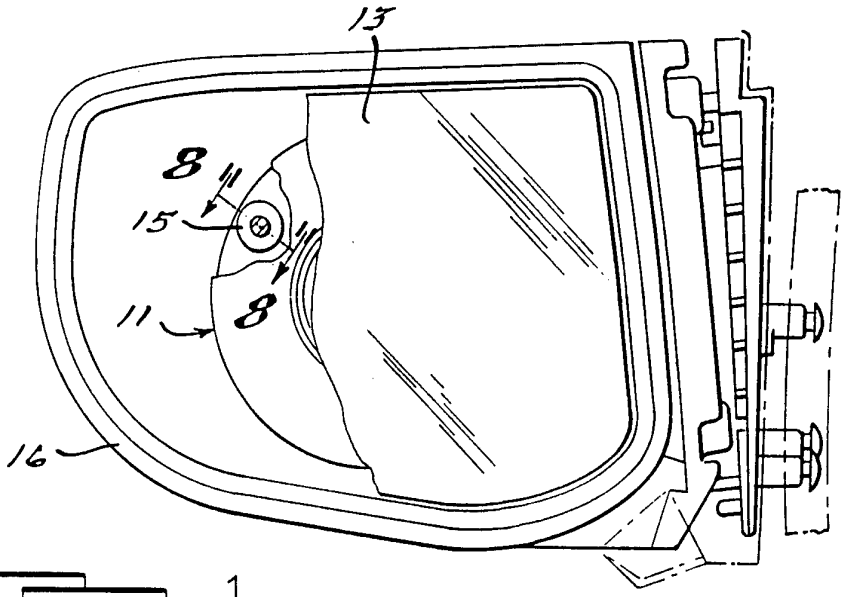
13
8
15
8
11
16

Fig. 1.

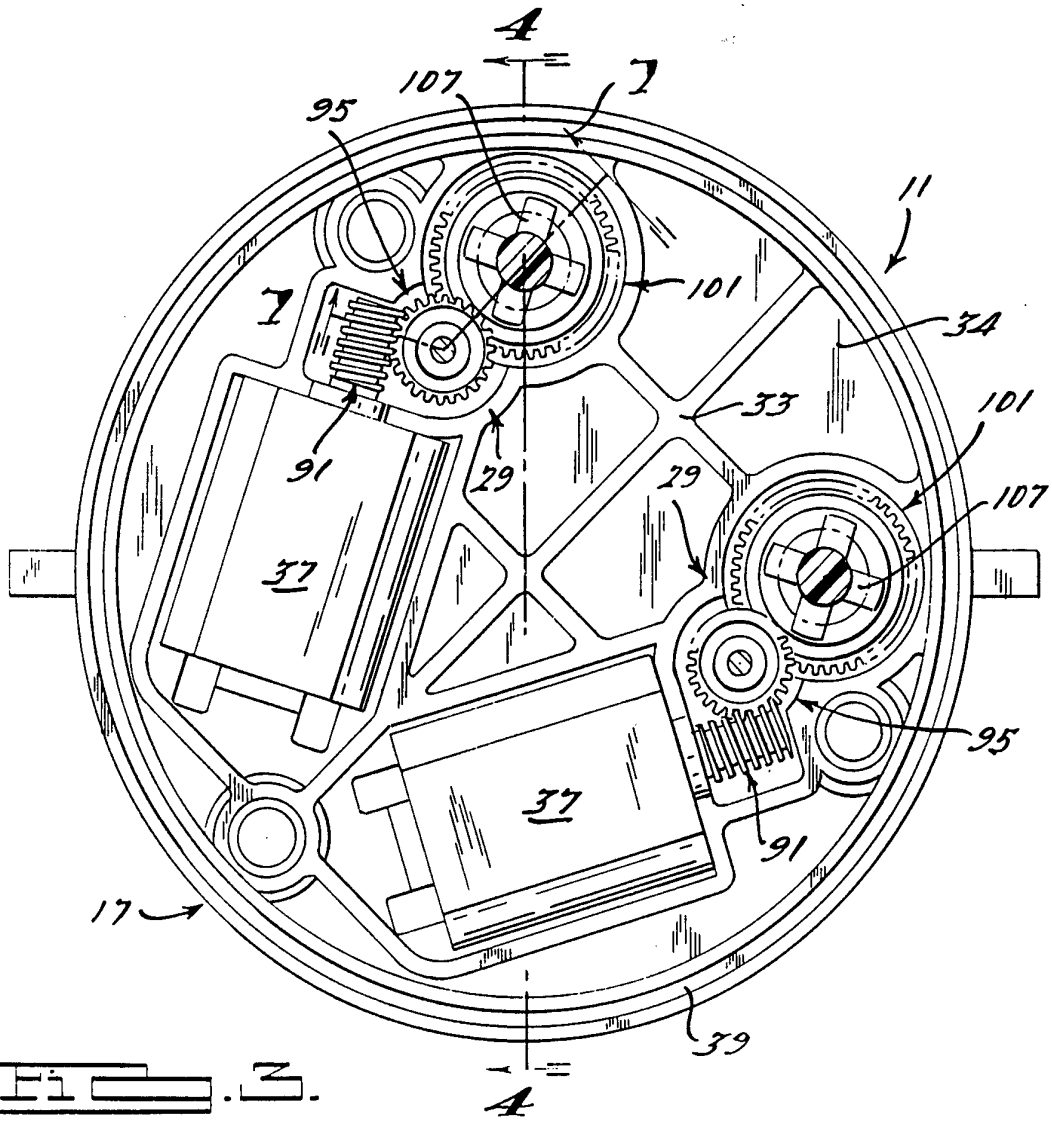
4
107
95
7
11
101
7
34
33
101
91
29
29
107
37
95
37
91
17
39
4

Fig. 2.

Fig. 2.

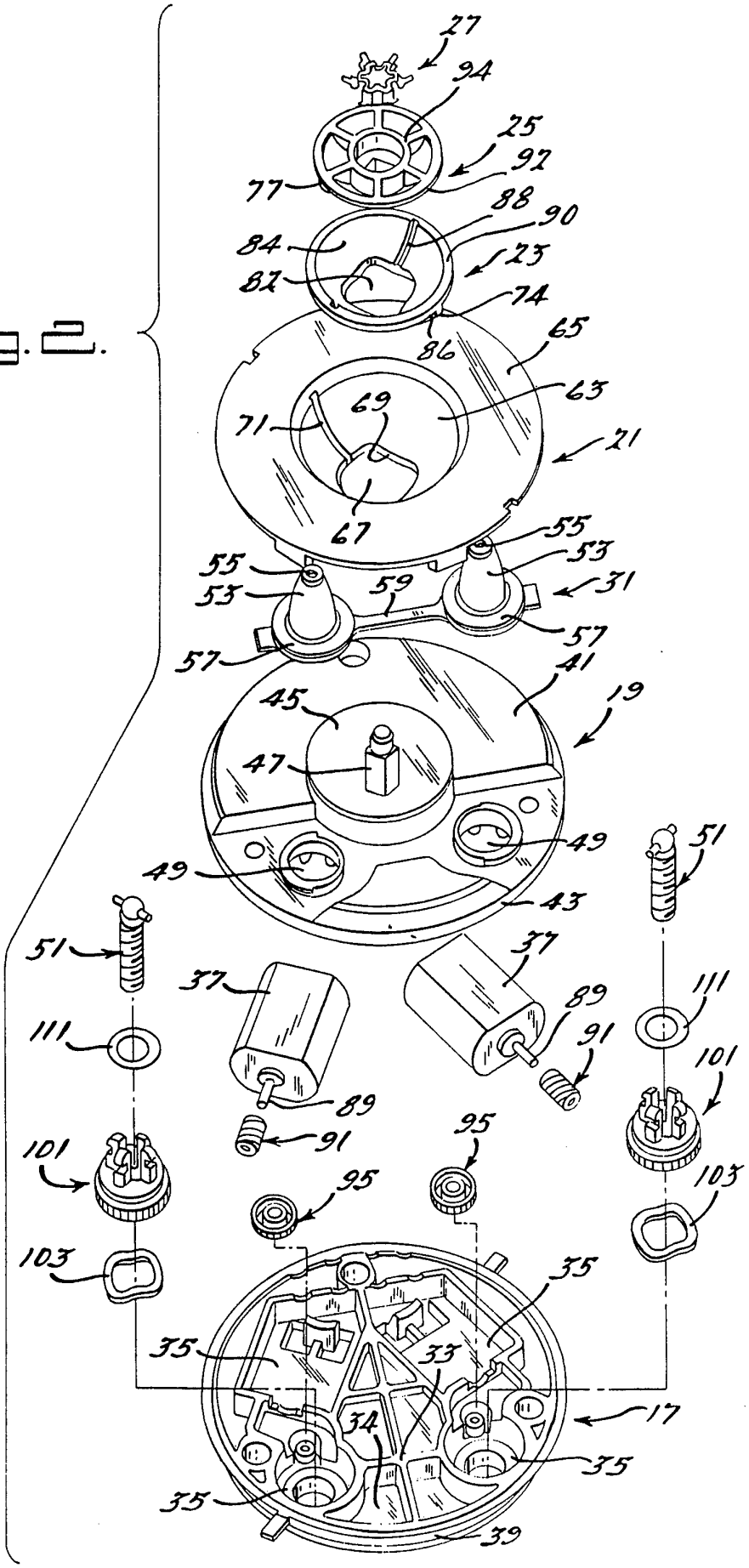
27
94
25
97
77
88
90
84
23
82
74
86
65
63
69
71
21
67
55
53
55
59
31
53
57
57
41
45
19
47
49
49
51
43
51
37
37
111
89
111
91
101
89
101
91
95
95
103
103
35
35
33
17
34
35
35
39

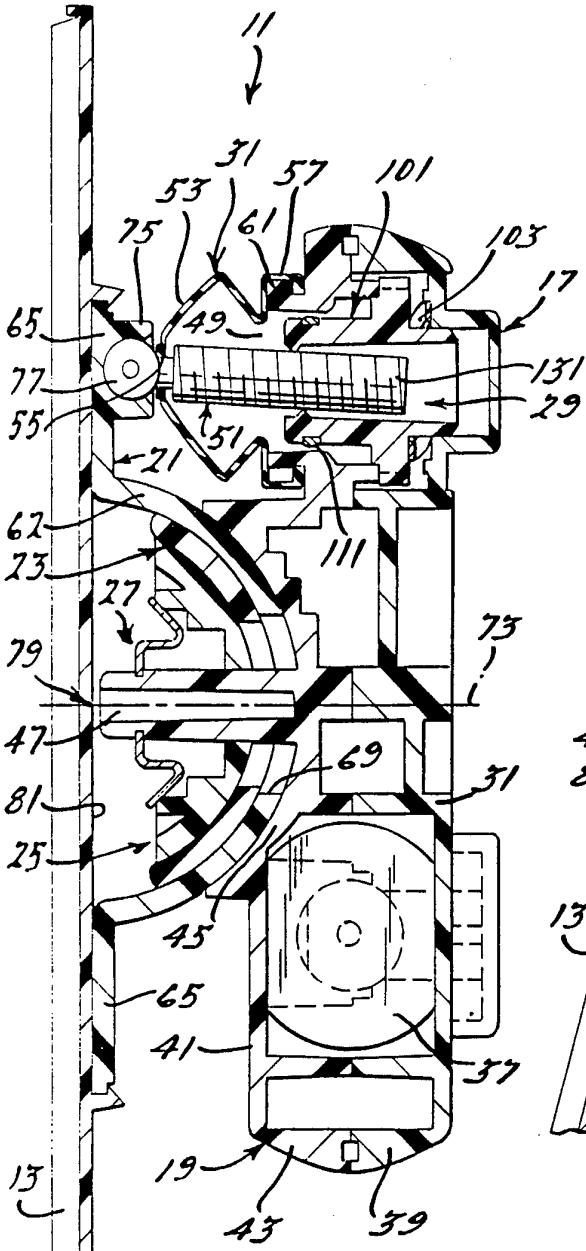

Fig. 4.

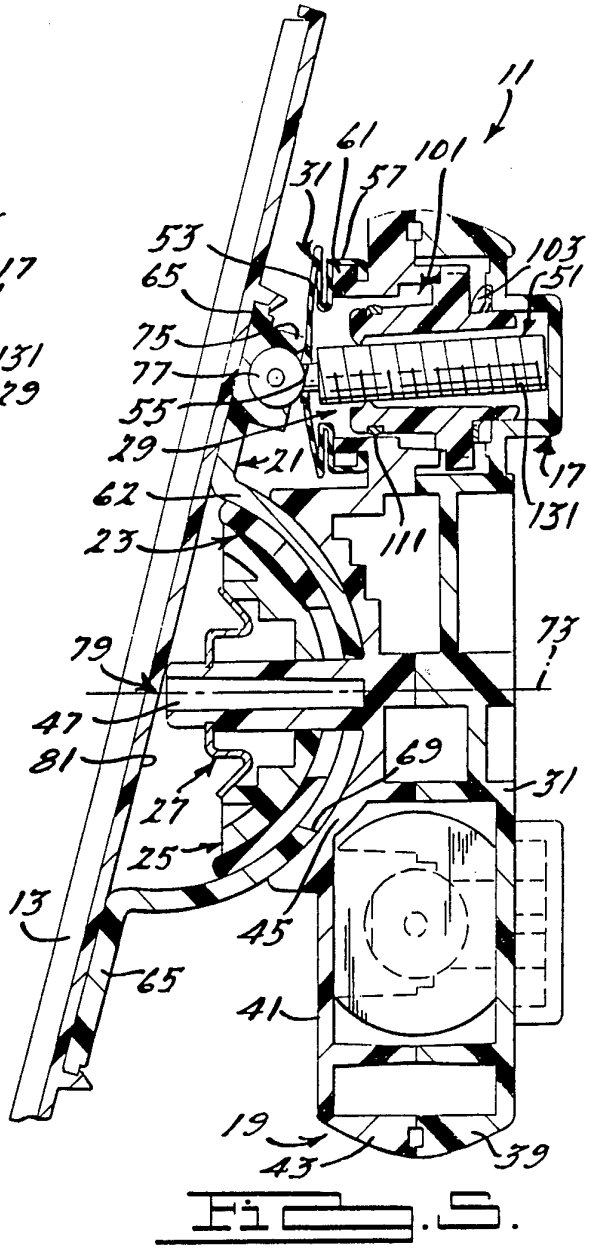

Fig. 5.

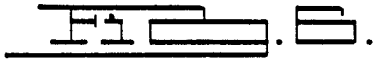

Fig. 6.

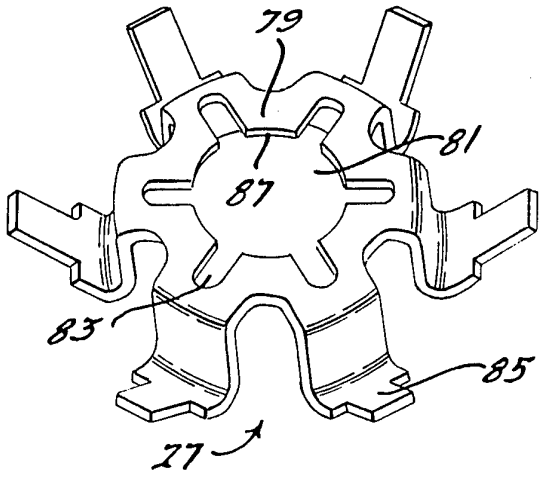

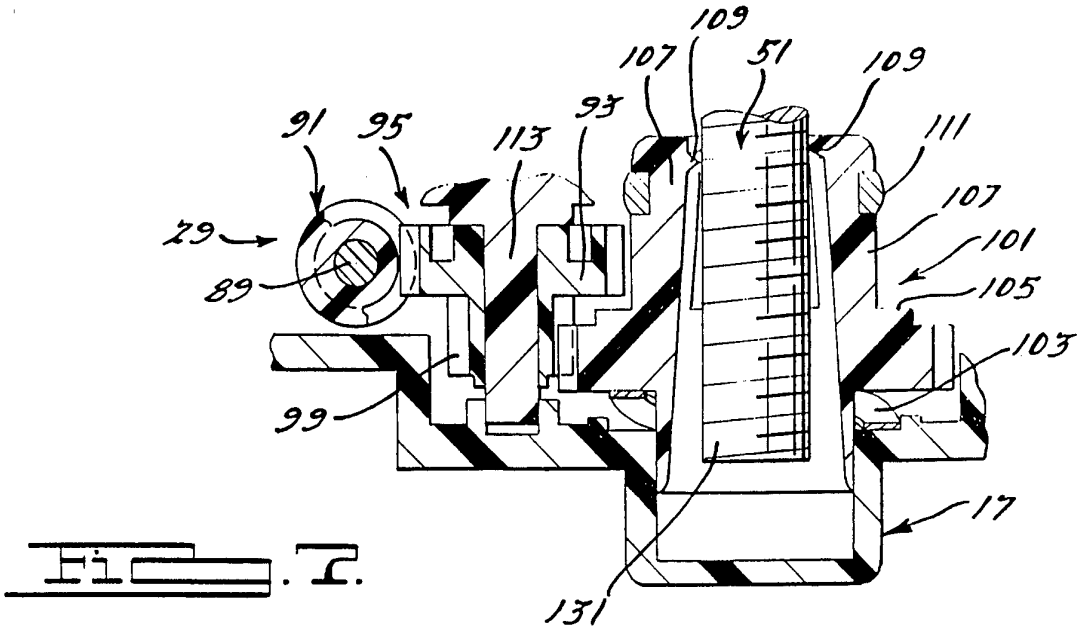
109
107
51
109
91
95
113
93
111
107
79
101
89
105
103
99
17
131

Fig. 7.

Fig. 8.

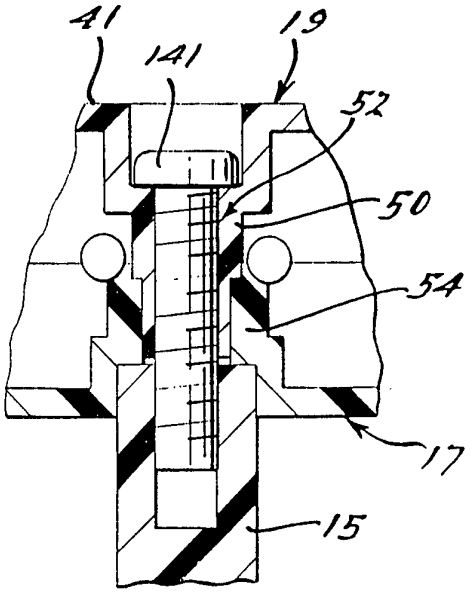
41
141
19
52
50
54
17
15

INTERNATIONAL SEARCH REPORT

Inter. nal Application No
PCT/US 94/02473

A. CLASSIFICATION OF SUBJECT MATTER
IPC 5 B60R1/06 F16C11/06

According to International Patent Classification (IPC) or to both national classification and IPC

B. FIELDS SEARCHED

Minimum documentation searched (classification system followed by classification symbols)
IPC 5 B60R F16C

Documentation searched other than minimum documentation to the extent that such documents are included in the fields searched

Electronic data base consulted during the international search (name of data base and, where practical, search terms used)

C. DOCUMENTS CONSIDERED TO BE RELEVANT

Category °	Citation of document, with indication, where appropriate, of the relevant passages	Relevant to claim No.
A	EP,A,0 278 310 (COM.MER ITALIA S.P.A.) 17 August 1988 see column 2, line 41 - column 4, line 18; figures 1-3	1-3,9,11
A	US,A,4 693 571 (KIMURA ET AL.) 15 September 1987 cited in the application see column 3, line 13 - column 8, line 33; figures	1,9
A	PATENT ABSTRACTS OF JAPAN vol. 10, no. 21 (M-449) (2078) 28 January 1986 & JP,A,60 179 349 (KOITO SEISAKUSHO K.K.) 13 September 1985 see abstract	1,9
Y		10

-/--

[X] Further documents are listed in the continuation of box C. [X] Patent family members are listed in annex.

° Special categories of cited documents :

"A" document defining the general state of the art which is not considered to be of particular relevance

"E" earlier document but published on or after the international filing date

"L" document which may throw doubts on priority claim(s) or which is cited to establish the publication date of another citation or other special reason (as specified)

"O" document referring to an oral disclosure, use, exhibition or other means

"P" document published prior to the international filing date but later than the priority date claimed

"T" later document published after the international filing date or priority date and not in conflict with the application but cited to understand the principle or theory underlying the invention

"X" document of particular relevance; the claimed invention cannot be considered novel or cannot be considered to involve an inventive step when the document is taken alone

"Y" document of particular relevance; the claimed invention cannot be considered to involve an inventive step when the document is combined with one or more other such documents, such combination being obvious to a person skilled in the art.

"&" document member of the same patent family

3

Date of the actual completion of the international search	Date of mailing of the international search report
12 July 1994	14.10.94

Name and mailing address of the ISA	Authorized officer
European Patent Office, P.B. 5818 Patentlaan 2 NL - 2280 HV Rijswijk Tel. (+31-70) 340-2040, Tx. 31 651 epo nl, Fax (+31-70) 340-3016	DUBOIS, B

Form PCT/ISA/210 (second sheet) (July 1992)

INTERNATIONAL SEARCH REPORT

Inter nal Application No
PCT/US 94/02473

C.(Continuation) DOCUMENTS CONSIDERED TO BE RELEVANT

Category °	Citation of document, with indication, where appropriate, of the relevant passages	Relevant to claim No.
Y	FR,A,2 119 772 (GRENET) 4 August 1972 see page 3, line 39 - page 4, line 8; claims 1-3,8; figures 13,14	10
A	US,A,2 555 239 (D.M. MORGENSTEIN) 29 May 1951 see the whole document	10
X	EP,A,0 276 677 (MURAKAMI KAIMEDO CO. LTD) 3 August 1988 see column 5, line 15 - column 9, line 39; figures	11
A		1,2,9
A	US,A,4 981 279 (ANDREAS ET AL.) 1 January 1991 see column 1, line 65 - column 3, line 5; figures 1-4 see column 3, line 14 - line 20; figures 5,6	1,2,9,11

3

INTERNATIONAL SEARCH REPORT

International application No.
PCT/US94/02473

Box I Observations where certain claims were found unsearchable (Continuation of item 1 of first sheet)

This international search report has not been established in respect of certain claims under Article 17(2)(a) for the following reasons:

1. ☐ Claims Nos.:
because they relate to subject matter not required to be searched by this Authority, namely:

2. ☐ Claims Nos..
because they relate to parts of the international application that do not comply with the prescribed requirements to such an extent that no meaningful international search can be carried out, specifically:

3. ☐ Claims Nos.:
because they are dependent claims and are not drafted in accordance with the second and third sentences of Rule 6.4(a).

Box II Observations where unity of invention is lacking (Continuation of item 2 of first sheet)

This International Searching Authority found multiple inventions in this international application, as follows:

SEE EXTRA SHEET ATTACHED

1. ☐ As all required additional search fees were timely paid by the applicant, this international search report covers all searchable claims.

2. ☐ As all searchable claims could be searches without effort justifying an additional fee, this Authority did not invite payment of any additional fee.

3. ☐ As only some of the required additional search fees were timely paid by the applicant, this international search report covers only those claims for which fees were paid, specifically claims Nos.:

4. ☒ No required additional search fees were timely paid by the applicant. Consequently, this international search report is restricted to the invention first mentioned in the claims; it is covered by claims Nos.:

1-7, 9-11

Remark on Protest

☐ The additional search fees were accompanied by the applicant's protest.

☐ No protest accompanied the payment of additional search fees.

FURTHER INFORMATION CONTINUED FROM PCT/ISA/ 210

1. Claims 1-7, 9-11 directed to an automotive exterior mirror positioning device using a large diameter pivot cup, and the intregration of such a pivot cup inside a power pack.

2. Claim 8 directed to the assembly of a two-part casing for the power pack of an automotive exterior mirror.

INTERNATIONAL SEARCH REPORT

Information on patent family members

Inte. onal Application No
PCT/US 94/02473

Patent document cited in search report	Publication date	Patent family member(s)	Publication date
EP-A-0278310	17-08-88	DE-A- 3881535	15-07-93
		JP-A- 63203442	23-08-88
		US-A- 4818090	04-04-89
US-A-4693571	15-09-87	JP-A- 60154931	14-08-85
		JP-A- 60154932	14-08-85
		FR-A,B 2558968	02-08-85
FR-A-2119772	04-08-72	NONE	
US-A-2555239		NONE	
EP-A-0276677	03-08-88	JP-A- 1041948	14-02-89
		US-A- 4877214	31-10-89
US-A-4981279	01-01-91	CA-A- 2028980	08-05-91