A. J. HOOD.

MOTORS FOR LIGHT MACHINERY.

No. 193,956. Patented Aug. 7, 1877.

Fig. 1.

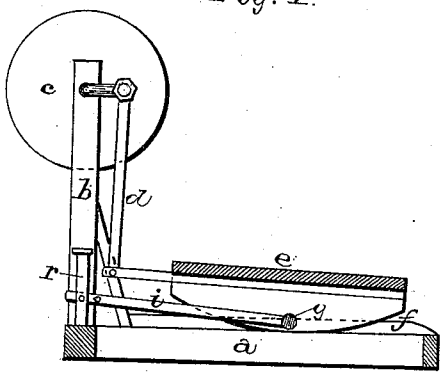

Fig. 2.

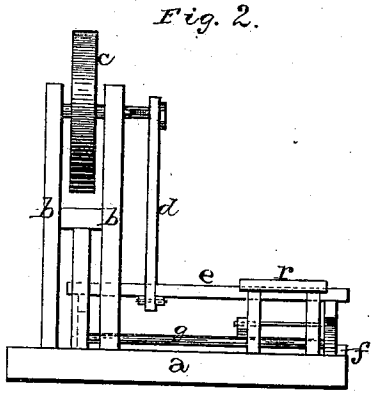

WITNESSES

Albert J. de Geyk

H. S. D. Haines

INVENTOR

A. J. Hood

per

F. A. Lehmann, atty.

N. PETERS, PHOTO-LITHOGRAPHER, WASHINGTON, D. C.

UNITED STATES PATENT OFFICE.

ALEXANDER J. HOOD, OF FENNIMORE CENTRE, WISCONSIN.

IMPROVEMENT IN MOTORS FOR LIGHT MACHINERY.

Specification forming part of Letters Patent No. **193,956**, dated August 7, 1877; application filed June 8, 1877.

To all whom it may concern:

Be it known that I, ALEXANDER J. HOOD, of Fennimore Centre, in the county of Grant and State of Wisconsin, have invented certain new and useful Improvements in Motors for Light Machinery; and I do hereby declare the following to be a full, clear, and exact description of the invention, such as will enable others skilled in the art to which it pertains to make and use it, reference being had to the accompanying drawings, which form part of this specification.

My invention relates to an improved motor for light machinery; and it consists in the arrangement and combination of parts that will be more fully described hereinafter, whereby light machines of all kinds can be operated by a rocking movement of the body.

The accompanying drawings represent my invention.

a represents a rectangular frame of any desired size or construction. Rising from the front end of this machine are standards *b*, upon which is journaled a grindstone, *c*, or a fly-wheel of any desired size. Connected to this grindstone by means of the connecting-rod *d* is the rocking frame *e*, which rocks back and forth upon the top of the frame *a*, the said frame being provided with side strips *f*, so as to prevent the frame *e* from sliding off the top of the frame. The two rockers of the frame are united together by means of a round, *g*, and fastened to this round is a connecting-rod, *i*, which has its outer end fastened to the side of the footstool *r*. This rod *i* serves to prevent the frame *e* from moving back and forth upon the top of the frame, and thereby becoming displaced. Upon the top of the frame *e* may stand the operator, and cause the grindstone to revolve rapidly by moving his weight back and forth; or a chair may be placed upon the top of the frame, so that the operator can sit down, and by rocking back and forth make the grindstone or wheel revolve. Where a balance-wheel is used instead of the grindstone here shown, this motive power may be applied to running light machinery of all kinds. Upon the front of the frame is a footstool, *r*, for the use of children, so as to enable them to use the rocker more readily. When a child is to operate the machine, the rocking frame will be drawn up closer to the wheel by means of the rod *i*, which is provided with an extra hole for this purpose.

Having thus described my invention, I claim—

1. In combination with the frame *a*, rocking frame *e*, placed thereon, round *g*, and a connecting-rod, *i*, to prevent the frame *e* from being displaced, substantially as shown.

2. The combination of the frame *a*, rocking frame *e*, and means for preventing lateral displacement of the rocker, with the rod *i*, connecting-rod *d*, wheel *c*, and a supporting-frame, *b*, substantially as set forth.

In testimony that I claim the foregoing I have hereunto set my hand and seal this 28th day of May, 1877.

ALEXANDER J. HOOD. [L. S.]

Witnesses:
JOHN D. WILSON,
G. W. COWAN.