US 20120167613A1

(19) United States

(12) Patent Application Publication

PARK et al.

(10) Pub. No.: US 2012/0167613 A1

(43) Pub. Date: Jul. 5, 2012

(54) AXIAL FLOW FAN AND OUTDOOR UNIT FOR AIR CONDITIONER

(76) Inventors: **Jeongtaek PARK**, Seoul (KR); **Deok Huh**, Seoul (KR)

(21) Appl. No.: **13/314,325**

(22) Filed: **Dec. 8, 2011**

(30) **Foreign Application Priority Data**

Dec. 29, 2010 (KR) 10-2010-0138007

Publication Classification

(51) **Int. Cl.**

F25D 17/06	(2006.01)
F28D 15/00	(2006.01)
F01D 5/14	(2006.01)

(52) **U.S. Cl.** ..... **62/426**; 416/223 R; 165/104.14

(57) **ABSTRACT**

Provided are an axial flow fan and an air conditioner outdoor unit including the axial flow fan. The axial flow fan includes a hub and blades disposed on an outer surface of the hub. Each of the blades satisfies that a shortest distance measured from an imaginary line (L**2**) passing through a center of the hub to a front end of an outer edge of the blade is greater than a shortest distance measured from the imaginary line (L**2**) to a rear end of the outer edge of the blade. The front end of the outer edge of the blade is a leading end in a rotation direction of the blade, and the rear end of the outer edge of the blade is a trailing end in the rotation direction of the blade. Owing to the shape of the blade, noise can be reduced while increasing the flowrate of air.

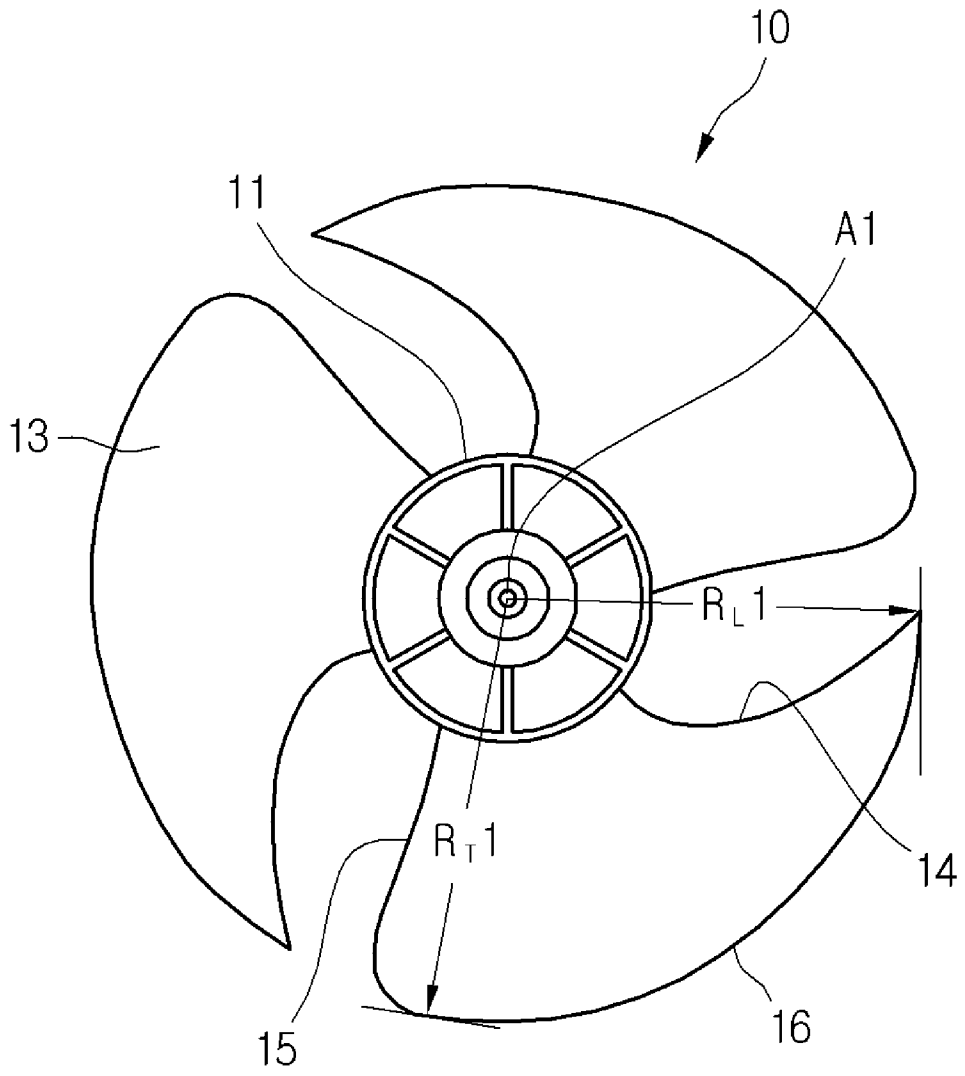

Fig. 1

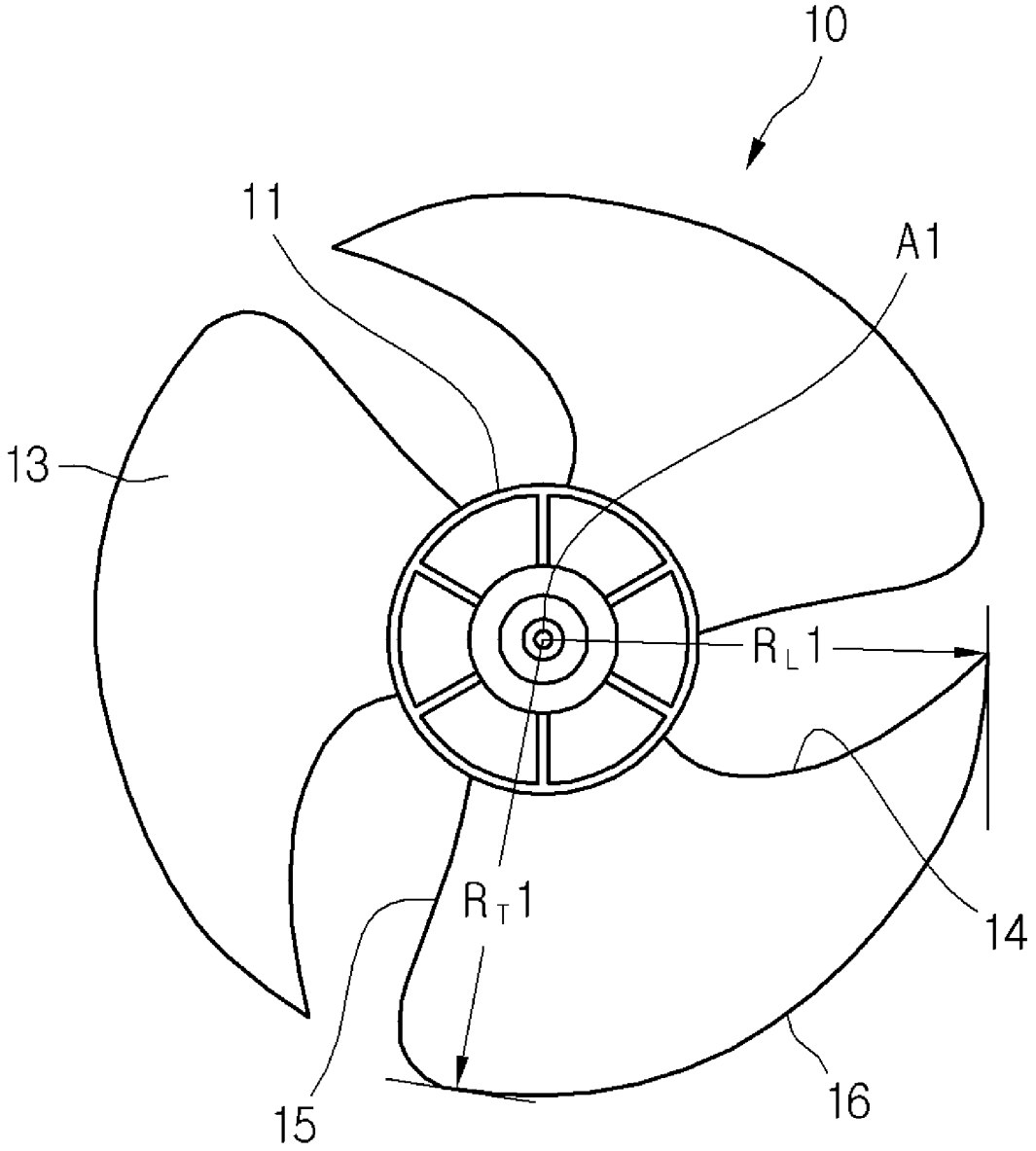

Fig. 2

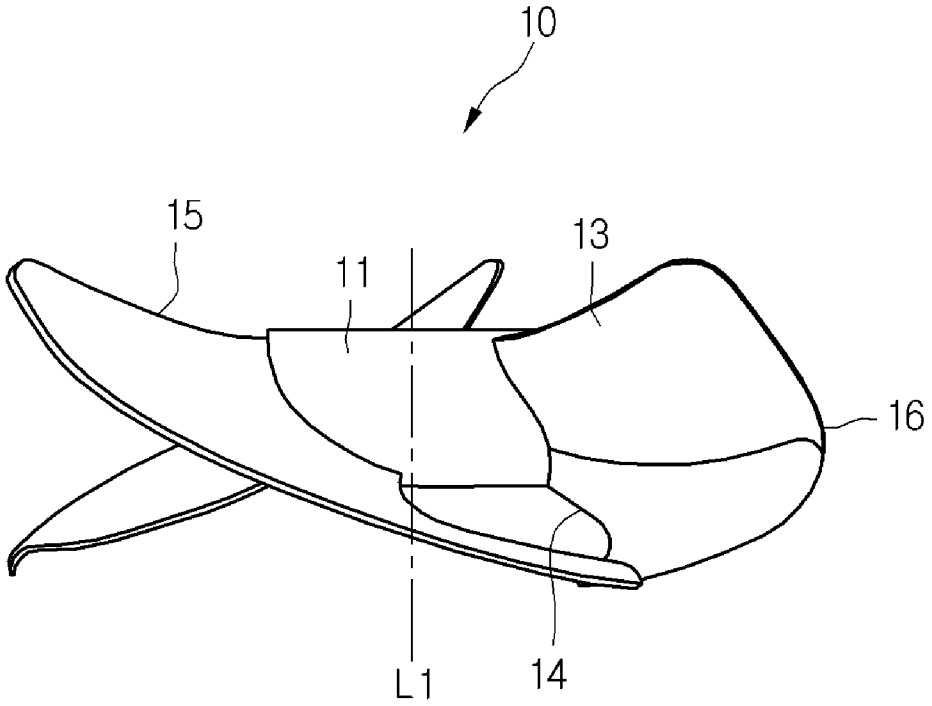

Fig. 3

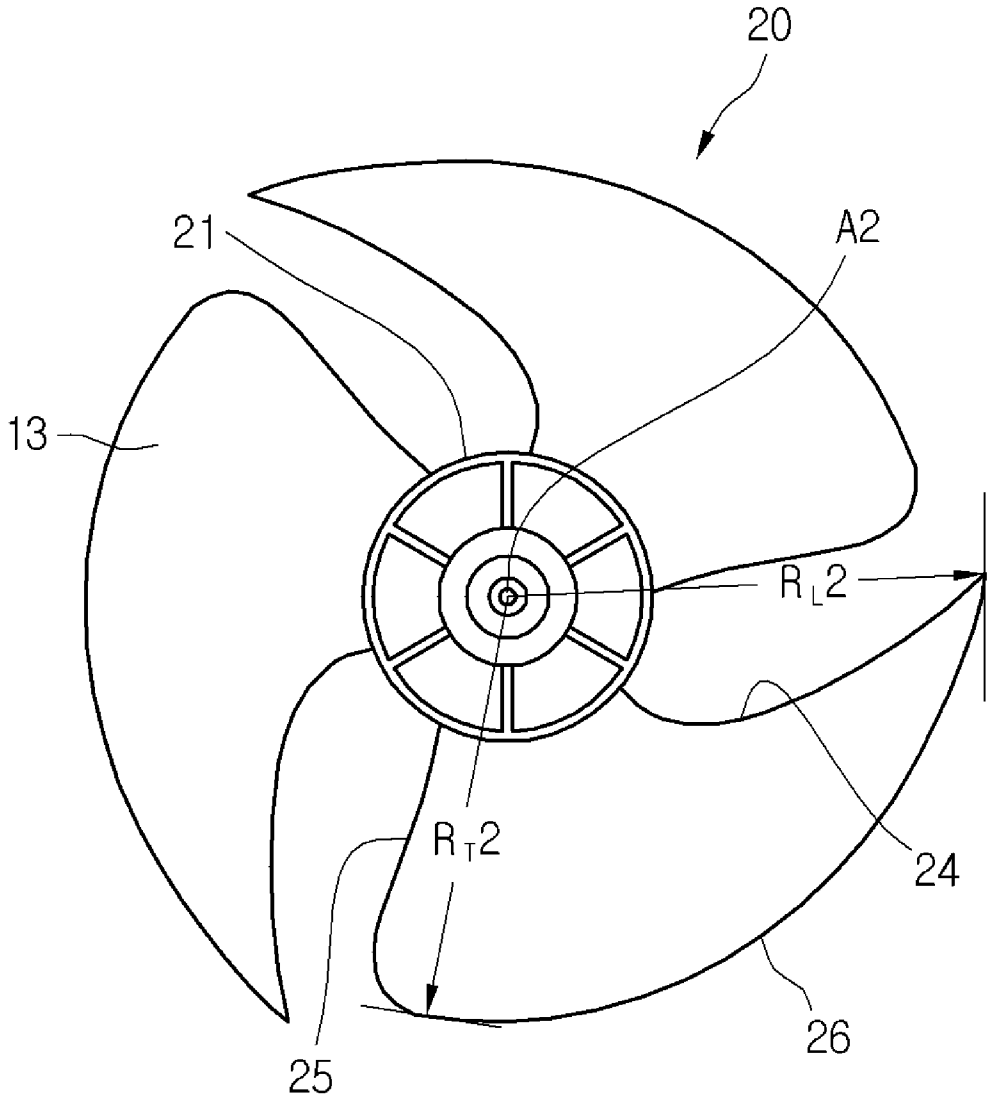

Fig. 4

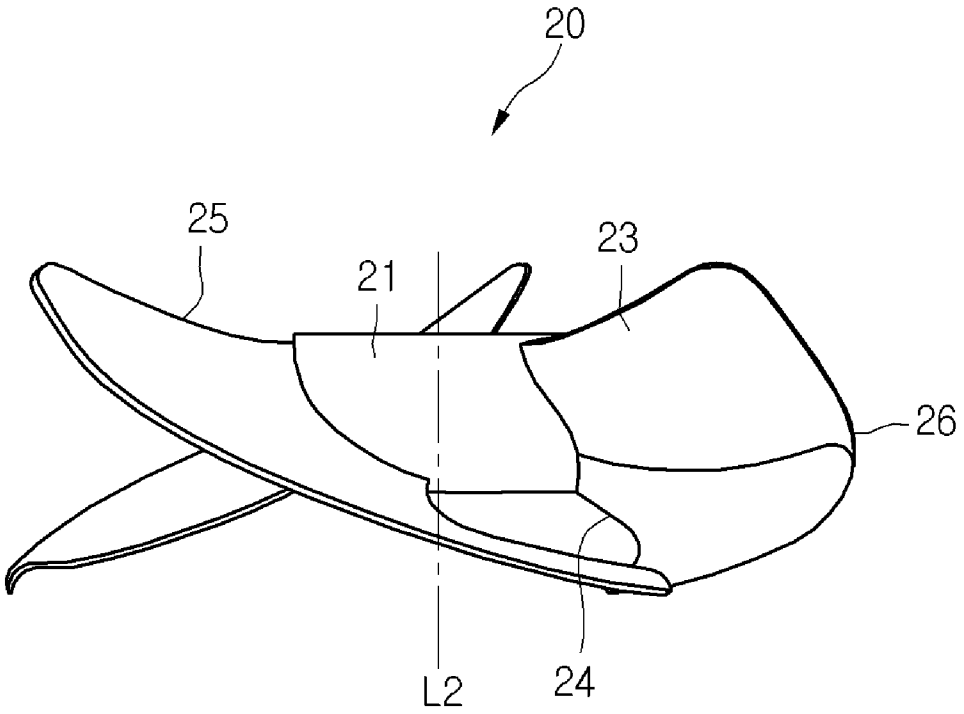

Fig. 5

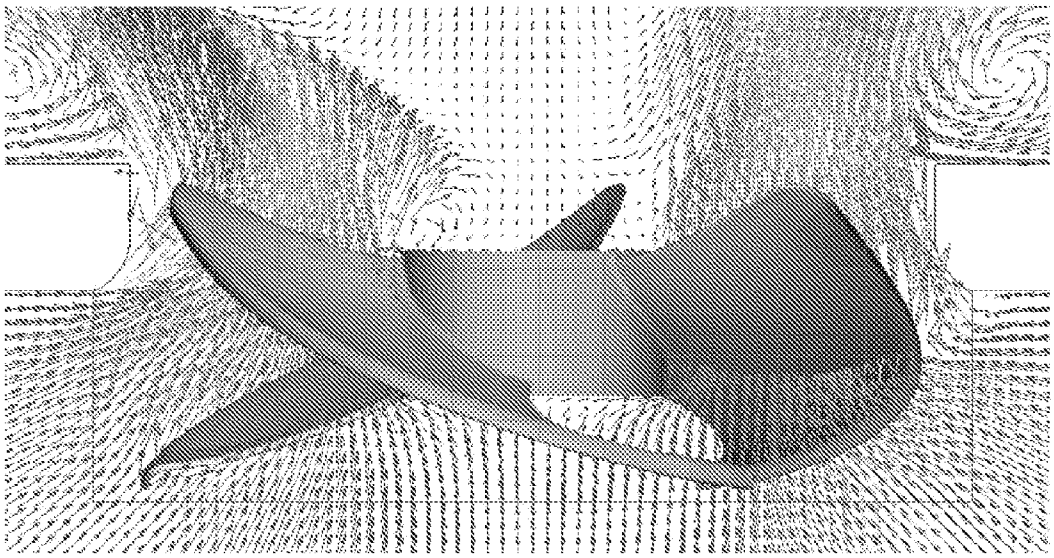

-Present invention-

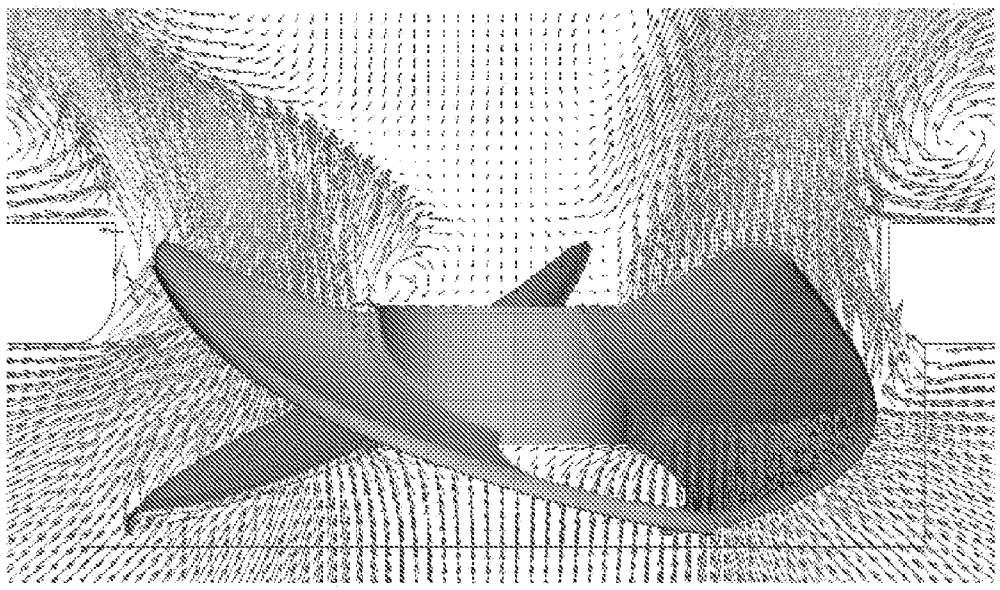

-Prior art-

Fig. 6

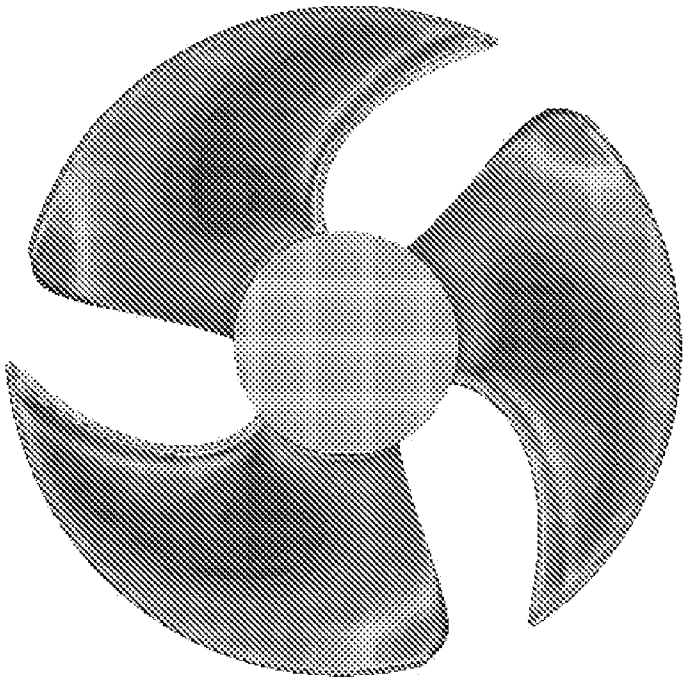

-Present invention-

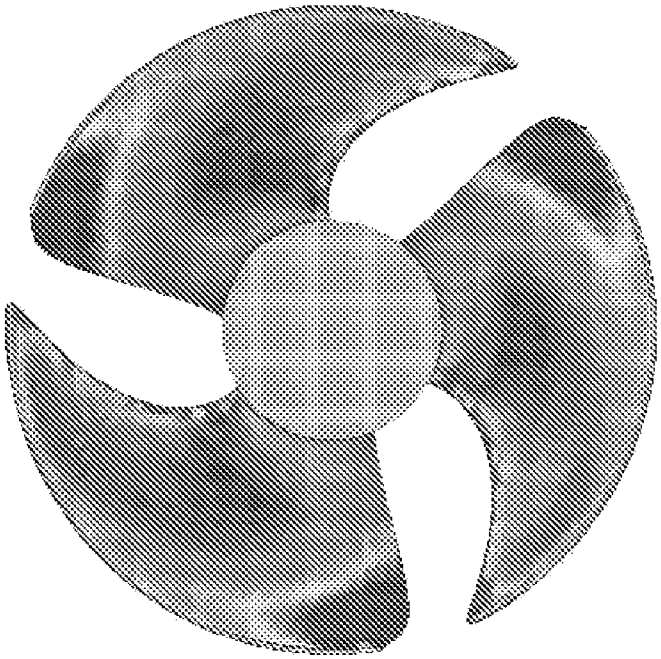

-Prior art-

Fig. 7

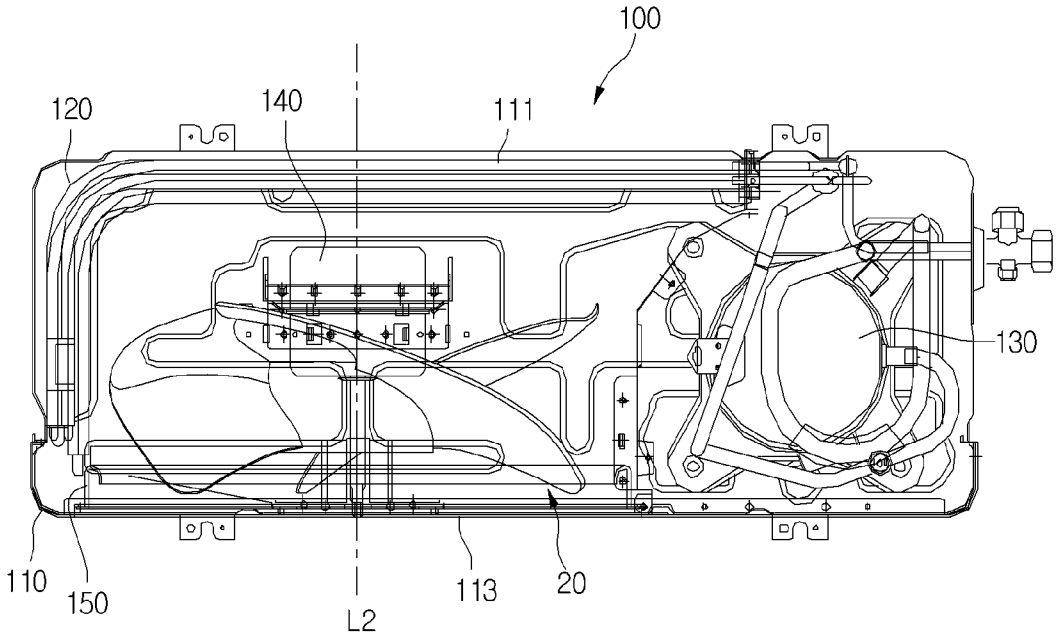

AXIAL FLOW FAN AND OUTDOOR UNIT FOR AIR CONDITIONER

CROSS-REFERENCE TO RELATED APPLICATIONS

[0001] The present application claims priority under 35 U.S.C. 119 and 35 U.S.C. 365 to Korean Patent Application No. 10-2010-0138007 (filed on Dec. 29, 2010), which is hereby incorporated by reference in its entirety.

BACKGROUND

[0002] The present disclosure relates to an axial flow fan and an air conditioner outdoor unit including the axial flow fan.

[0003] Air conditioners are home appliances for cooling and/or heating indoor areas by using refrigerant circulating in heat-exchange cycles. A split type air conditioner includes an indoor unit and an outdoor unit. Components for heat-exchange cycle such as an outdoor heat exchanger and a compressor are disposed in the outdoor unit.

[0004] In addition, a fan is disposed in the outdoor unit to blow air for facilitating heat exchange between the outdoor heat exchanger and outdoor air. Generally, an axial flow fan is used as the fan. Air flows in the direction of a rotation shaft of an axial flow fan.

[0005] Hereinafter, an axial flow fan of the related art will be described in detail with reference to the accompanying drawings.

[0006] FIG. **1** is a plan view illustrating an axial flow fan **10** of the related art, and FIG. **2** is a schematic side view of the axial flow fan **10** of the related art.

[0007] Referring to FIGS. **1** and **2**, the axial flow fan **10** includes a hub **11** and a plurality of blades **13**. A rotation shaft (not shown) of the axial flow fan **10** is coupled to the hub **11**. As the blades **13** are rotated, air is forced to flow.

[0008] In detail, based on the rotation direction of the blades **13**, the blades **13** include: leading edges **14**; trailing edges **15**; and tips **16**. The tips **16** are outer edges of the blades **13**. A shortest distance RL**1** measured from an imaginary line L**1** passing through the center A**1** of the hub **11** to an end (front end) of the tip **16** close to the leading edge **14** is equal to a shortest distance RT**1** measured from the imaginary line L**1** to the other end (rear end) of the tip **16** close to the trailing edge **15**.

[0009] However, the axial flow fan **10** of the related art has the following limitations.

[0010] First, the axial flow fan **10** generates noise during operation. Due to such noise, users complain about products using axial flow fans such as the axial flow fan **10**.

[0011] Thus, various design changes have been attempted to reduce noise of the axial flow fan **10**. In spite of such attempts, noise of the axial flow fan **10** is not sufficiently reduced, or the flowrate of air by the axial flow fan **10** is reduced if the noise of the axial flow fan **10** is reduced.

[0012] If the axial flow fan **10** is used in an outdoor unit of an air conditioner, the size of the axial flow fan **10** is limited prevent interference with other components disposed in the outdoor unit such as an orifice disposed in the outdoor unit for guiding air blown by the axial flow fan **10**. Therefore, it is necessary to modify components disposed in the outdoor unit to increase the output power of the axial flow fan **10**. That is, modification of components is necessary to increase the flowrate of air blown by the axial flow fan **10**.

SUMMARY

[0013] Embodiments provide an axial flow fan generating less noise and an air conditioner outdoor unit including the axial flow fan.

[0014] Embodiments also provide an axial flow fan configured to reduce noise without affecting the flow rate of air and an air conditioner outdoor unit including the axial flow fan.

[0015] Embodiments also provide an axial flow fan configured to increase the flow rate of air more easily and an air conditioner outdoor unit including the axial flow fan.

[0016] In one embodiment, an axial flow fan includes: a hub; and a plurality of blades disposed on an outer surface of the hub, wherein each of the blades satisfies that a shortest distance measured from an imaginary line (L**2**) passing through a center of the hub to a front end of an outer edge of the blade is different from a shortest distance measured from the imaginary line (L**2**) to a rear end of the outer edge of the blade, wherein the front end of the outer edge of the blade is a leading end in a rotation direction of the blade, and the rear end of the outer edge of the blade is a trailing end in the rotation direction of the blade.

[0017] In another embodiment, an axial flow fan includes: a hub; and a plurality of blades disposed on an outer surface of the hub, wherein each of the blades satisfies that when the blade is rotated, a trajectory formed by a front end of an outer edge of the blade is greater than a trajectory formed by a rear end of the outer edge of the blade.

[0018] In another embodiment, there is provided an outer unit of an air conditioner, the outer unit including: a casing including a suction hole and a discharge hole for inflows and outflows of air; an outdoor heat exchanger disposed in the casing to allow a flow of refrigerant therein; an axial flow fan configured to blow outdoor air for heat exchange between the outdoor air and the refrigerant flowing in the outdoor heat exchanger; a motor configured to rotate the axial flow fan; and an orifice configured to guide outdoor air blown by the axial flow fan to an outside area of the casing through the discharge hole, wherein the axial flow fan includes a blade, and the blade satisfies that a shortest distance measured from an imaginary line (L**2**) passing through a center of a hub of the blade to a front end of an outer edge of the blade is different from a shortest distance measured from the imaginary line (L**2**) to a rear end of the outer edge of the blade, wherein the front end of the outer edge of the blade is a leading end in a rotation direction of the blade, and the rear end of the outer edge of the blade is a trailing end in the rotation direction of the blade.

[0019] The details of one or more embodiments are set forth in the accompanying drawings and the description below. Other features will be apparent from the description and drawings, and from the claims.

BRIEF DESCRIPTION OF THE DRAWINGS

[0020] The patent or application contains at least one drawing executed in color. Copies of this patent or patent application publication with color drawings will be provided by the Office upon request and payment of the necessary fee.

[0021] FIG. **1** is a plan view illustrating an axial flow fan of the related art.

[0022] FIG. **2** is a schematic side view illustrating the axial flow fan of the related art.

[0023] FIG. **3** is a plan view illustrating an axial flow fan according to an embodiment.

[0024] FIG. **4** is a schematic side view illustrating the axial flow fan according to the embodiment.

[0025] FIG. **5** is a view illustrating results of simulations for comparing the velocity of air flows by the axial flow fan of the embodiment with the velocity of air flows by an axial flow fan of the related art.

[0026] FIG. **6** is a view illustrating results of simulations for comparing the velocity of turbulent flows of air by the axial flow fan of the embodiment with the velocity of turbulent flows of air by an axial flow fan of the related art.

[0027] FIG. **7** is a sectional view illustrating main parts of an air conditioner outdoor unit to which the axial flow fan of the embodiment is applied.

DETAILED DESCRIPTION OF THE EMBODIMENTS

[0028] Hereinafter, an axial flow fan will be described in detail according to an embodiment with reference to the accompanying drawings.

[0029] FIG. **3** is a plan view illustrating an axial flow fan **20** according to an embodiment, and FIG. **4** is a schematic side view illustrating the axial flow fan **20** according to the embodiment.

[0030] Referring to FIGS. **3** and **4**, the axial flow fan **20** includes a hub **21** and a plurality of blades **23**. The hub **21** has an approximately cylindrical shape. A rotation shaft (not shown) is coupled to the hub **21** to rotate the axial flow fan **20**. Substantially, the rotation shaft is coupled to a center A**2** of the hub **21**. The blades **23** are disposed on the outer surface of the hub **21**. Base on the rotation direction of the blades **23**, the blades **23** include: leading edges **24**; trailing edges **25**; and tips **26** forming outer edges of the blades **23**. If the blades **23** are rotated, air flows in the direction of the rotation shaft.

[0031] A shortest distance measured from an imaginary line L**2** passing through the center A**2** of the hub **21** to a front end of the blade **23** is different from a shortest distance measured from the imaginary line L**2** to a rear end of the blade **23**. That is, a shortest distance RL**2** measured from the line L**2** to a front end of the tip **26** close to the leading edge **24** is different from a shortest distance RT**2** measured from the line L**2** to a rear end of the tip **26** close to the trailing edge **25**.

[0032] In detail, the shortest distance RL**2** measured from the line L**2** to the front end of the tip **26** close to the leading edge **24** is greater than the shortest distance RT**2** measured from the line L**2** to a rear end of the tip **26** close to the trailing edge **25**. In other words, the distance between the line L**2** and the tip **26** is varied. That is, the distance between the line L**2** and the tip **26** is gradually reduced from the front end to the rear end of the tip **26**.

[0033] Owing to this structure of the blade **23**, when the blade **23** is rotated, the trajectory of the front end of the tip **26** may be different from the trajectory of the rear end of the tip **26**.

[0034] That is, according to the current embodiment, when the blade **23** is rotated, the diameter of a trajectory formed by a portion of the blade **23** close to the leading edge **24** of the blade **23** may be different from the diameter of a trajectory formed by another portion of the blade **23** close to the trailing edge **25** of the blade **23**.

[0035] That is, according to the current embodiment, when the blade **23** is rotated, the diameter of a trajectory formed by a portion of the blade **23** close to the leading edge **24** of the blade **23** may be greater than the diameter of a trajectory formed by another portion of the blade **23** close to the trailing edge **25** of the blade **23**.

[0036] That is, according to the current embodiment, when the blade **23** is rotated, the diameter of the trajectory of the blade **23** may be gradually reduced in a direction from the front end of the tip **26** close to the leading edge **24** to the rear end of the tip close to the trailing edge **25**. In addition, the trajectory of the blade **23** formed by rotation of the blade **23** may have a cylindrical shape the diameter of which reduces gradually in the direction of air blown by the axial flow fan **20**.

[0037] Hereinafter, effects of the axial flow fan **20** of the embodiment will be described in detail with reference to the accompanying drawings.

[0038] FIG. **5** is a view illustrating results of simulations for comparing the velocity of air flows by the axial flow fan **20** of the embodiment with the velocity of air flows by an axial flow fan of the related art, and FIG. **6** is a view illustrating results of simulations for comparing the velocity of turbulent flows of air by the axial flow fan **20** of the embodiment with the velocity of turbulent flows of air by an axial flow fan of the related art.

[0039] Referring to FIG. **5**, flows of air by an axial flow fan is indicated by blue, green, yellow, and red colors. The velocity of flows of air increases in the order of blue, green, yellow, and red. That is, as shown in FIG. **5**, the velocity of flows of air by the axial flow fan of the embodiment is significantly greater than the velocity of flows of air by an axial flow fan of the related. Numerically, the flow rate of air blown by the axial flow fan of the embodiment is greater than the flow rate of air blown by the axial flow fan of the related art by about 5%.

[0040] FIG. **6** illustrates turbulent flows of air by the axial flow fan of the embodiment and the axial flow fan of the related art. In FIG. **6**, the velocity of the turbulent flows of air is denoted by the same colors as those used in FIG. **5**. As shown in FIG. **6**, the axial flow fan of the embodiment causes less turbulent flows as compared with the axial flow fan of the related art. Numerically, as compared with the axial flow fan of the related art, the axial flow fan of the embodiment reduces turbulent flows by about 3% and noise by about 2%.

[0041] Hereinafter, an explanation will be given on an exemplary case where the axial flow fan **20** is used in an outdoor unit of an air conditioner.

[0042] FIG. **7** is a sectional view illustrating main parts of an air conditioner outdoor unit **100** in which the axial flow fan **20** of the embodiment is used.

[0043] Referring to FIG. **7**, a casing **110** forms the exterior of the air conditioner outdoor unit **100**. A suction hole **111** is formed in the rear side of the casing **110**, and a discharge hole **113** is formed in the front side of the casing **110**. Various components of a heat exchanger are disposed in the casing **110**.

[0044] For example, an outdoor heat exchanger **120** and a compressor **130** are disposed in the casing **110**. Refrigerant flowing in the outdoor heat exchanger **120** exchanges heat with outdoor air, and the compressor **130** is used to compress the refrigerant. In addition, the axial flow fan **20** and a motor **140** are disposed in the casing **110**. The axial flow fan **20** is rotated by the motor **140** to blow outdoor air for facilitating heat exchange between the air and the refrigerant flowing in

the outdoor heat exchanger **120**. In detail, as the axial flow fan **20** is rotated, air is introduced into the casing **110** through the suction hole **111** and discharged from the casing **110** through the discharge hole **113** after the air exchanges heat with the outdoor heat exchanger **120**.

[0045] As described above, in the axial flow fan **20**, the shortest distance measured from the imaginary line L**2** passing through the center A**2** of the hub **21** to the front end of the blade **23** may be different from the shortest distance measured from the imaginary line L**2** to the rear end of the blade **23**. That is, when the axial flow fan **20** is rotated, the trajectory of the front end of the tip **26** may be different from the trajectory of the rear end of the tip **26**.

[0046] An orifice **150** is provided in the casing **110**. The orifice **150** has an approximately ring shape. The orifice **150** guides air blown by the axial flow fan **20** to the outside of the casing **110** through the discharge hole **113**. For this, the orifice **150** is disposed at the downstream side of the axial flow fan **20** in a direction in which air flows by the axial flow fan **20**. That is, the orifice **150** is closer to the trailing edges **25** of the blades **23** of the axial flow fan **20** than the leading edges **24** of the blades **23** of the axial flow fan **20**. The orifice **150** is overlapped with portions of the blades **23**. That is, the orifice **150** is overlapped with the trailing edges **25** of the blades **23**.

[0047] The output power of the axial flow fan **20** (that is, the flow rate of air blown by the axial flow fan **20**) may be proportional to the size of the blades **23**. Since the orifice **150** are close to the trailing edges **25**, if the size of the trailing edges **25** of the blades **23** is increased to increase the size of the blades **23**, components including the orifice **150** have to be redesigned. In other words, if the shortest distance RT**2** from the imaginary line L**2** passing through the center of the axial flow fan **20** to the rear end of the tip **26** of the blade **23** close to the trailing edge **25** is increased, it may be necessary to redesign components of the outdoor unit **100**.

[0048] However, according to the embodiment, the size of the blade **23** can be increased by increasing the leading edge **24** of the blade **23** that is distant from the orifice **150**, and thus it may be unnecessary to redesign the orifice **150**. That is, the output power of the axial flow fan **20** can be increased by increasing the shortest distance RL**2** from the imaginary line L**2** to the front end of the tip **26** close to the leading edge **24** without having to redesign components of the outdoor unit **100**.

[0049] According to the embodiments, the axial flow fan and the air conditioner outdoor unit including the axial flow fan provide the following effects.

[0050] Owing to the above-described shape of the blade, noise can be reduced while increasing the flow rate of air.

[0051] In addition, noise of the axial flow fan can be reduced and the flow rate of air blown by the axial flow fan can be increased without having to redesign other components of the outdoor unit.

[0052] Although embodiments have been described with reference to a number of illustrative embodiments thereof, it should be understood that numerous other modifications and embodiments can be devised by those skilled in the art that will fall within the spirit and scope of the principles of this disclosure. More particularly, various variations and modifications are possible in the component parts and/or arrangements of the subject combination arrangement within the scope of the disclosure, the drawings and the appended claims. In addition to variations and modifications in the component parts and/or arrangements, alternative uses will also be apparent to those skilled in the art.

What is claimed is:

1. An axial flow fan comprising:

a hub; and

a plurality of blades disposed on an outer surface of the hub,

wherein each of the blades satisfies that a shortest distance measured from an imaginary line (L**2**) passing through a center of the hub to a front end of an outer edge of the blade is greater than a shortest distance measured from the imaginary line (L**2**) to a rear end of the outer edge of the blade,

wherein the front end of the outer edge of the blade is a leading end in a rotation direction of the blade, and the rear end of the outer edge of the blade is a trailing end in the rotation direction of the blade.

2. The axial flow fan according to claim **1**, wherein each of blades comprises a leading edge in the rotation direction thereof, a trailing edge in the rotation direction thereof, and a tip as the outer edge,

wherein a shortest distance (RL**2**) measured from the imaginary line (L**2**) passing through the center of the hub to a front end of the tip close to the leading edge is greater than a shortest distance (RT**2**) measured from the imaginary line (L**2**) to a rear end of the tip close to the trailing edge.

3. The axial flow fan according to claim **2**, wherein a shortest distance from the imaginary line (L**2**) to the tip is gradually decreased in a direction from the front end of the tip close to the leading edge to the rear end of the tip close to the trailing edge.

4. The axial flow fan according to claim **1**, wherein the hub has a cylindrical shape.

5. The axial flow fan according to claim **1**, further comprising a rotation shaft coupled to the hub for rotating the axial flow fan.

6. The axial flow fan according to claim **5**, wherein the rotation shaft is coupled to the center of the hub.

7. The axial flow fan according to claim **5**, wherein if the blades are rotated, air is forced to flow along the rotation shaft.

8. An axial flow fan comprising:

a hub; and

a plurality of blades disposed on an outer surface of the hub,

wherein each of the blades satisfies that when the blade is rotated, a trajectory formed by a front end of an outer edge of the blade is greater than a trajectory formed by a rear end of the outer edge of the blade.

9. The axial flow fan according to claim **8**, wherein each of blades comprises a leading edge in a rotation direction thereof, a trailing edge in the rotation direction thereof, and a tip as the outer edge,

wherein when the blade is rotated, the diameter of a trajectory formed by a portion of the blade close to the leading edge is greater than the diameter of a trajectory formed by another portion of the blade close to the trailing edge.

10. The axial flow fan according to claim **9**, wherein the diameter of a trajectory formed by rotation of the blade is gradually reduced in a direction from a front end of the tip close to the leading edge to a rear end of the tip close to the trailing edge.

11. The axial flow fan according to claim **8**, wherein a trajectory formed by rotation of the blade has a cylindrical shape with a diameter gradually reducing in a direction of air blown by the axial flow fan.

12. An outer unit of an air conditioner, the outer unit comprising:

a casing comprising a suction hole and a discharge hole for inflows and outflows of air;

an outdoor heat exchanger disposed in the casing to allow a flow of refrigerant therein;

an axial flow fan configured to blow outdoor air for heat exchange between the outdoor air and the refrigerant flowing in the outdoor heat exchanger;

a motor configured to rotate the axial flow fan; and

an orifice configured to guide outdoor air blown by the axial flow fan to an outside area of the casing through the discharge hole,

wherein the axial flow fan comprises a blade, and the blade satisfies that a shortest distance measured from an imaginary line (L**2**) passing through a center of a hub of the blade to a front end of an outer edge of the blade is different from a shortest distance measured from the imaginary line (L**2**) to a rear end of the outer edge of the blade,

wherein the front end of the outer edge of the blade is a leading end in a rotation direction of the blade, and the rear end of the outer edge of the blade is a trailing end in the rotation direction of the blade.

13. The outdoor unit according to claim **12**, wherein the orifice is located at downstream side of the axial flow fan in a direction in which air flows by the axial flow fan.

14. The outdoor unit according to claim **12**, wherein the orifice is overlapped with a portion of the blade close to a trailing edge of the blade.

15. The outdoor unit according to claim **12**, wherein the orifice has a ring shape.

16. The outdoor unit according to claim **12**, further comprising a compressor configured to compress the refrigerant.

17. The outdoor unit according to claim **12**, wherein the suction hole of the casing is formed in a rear side of the casing to introduce outdoor air into the casing.

18. The outdoor unit according to claim **12**, wherein the discharge hole of the casing is formed in a front side of the casing to discharge outdoor air from the casing after the outdoor air exchanges heat with the refrigerant flowing in the outdoor heat exchanger.

* * * * *