ORIGINAL

ABSTRACT

The invention relates to a device for interrupting electrical current, such as a switch-disconnector, comprising a case (1), a stationary contact (21), a sliding carriage (3) carrying a mobile contact (22), actuating means (5) to move the carriage by making the mobile contact near the stationary contact, and retaining means (6) to transitorily retain the carriage in a position for which the stationary and mobile contacts are separated from each other while the actuating means compress a spring, then to suddenly free the carriage and make it possible for a reciprocal pressing of the stationary and mobile contacts.

According to the invention, the retaining means comprise a case shoulder (61) and a pawl (62) pivotally mounted on the carriage (3), the pawl cooperating with the shoulder in order to retain the carriage during the compression of the spring, and being subjected to a swiveling making it possible for it to move away from the shoulder once the spring is sufficiently compressed.

Fig.10

CLAIMS

1. A device for interrupting electrical current, such as a switch disconnector, comprising:

- a case (1);
- at least a stationary contact (21) secured to the case (1);
- a carriage (3) slidingly mounted in the case (1) along an axial direction (Z) from an inactive position, through a retaining position, to a final interlocking position;
- a mobile contact (22) slidingly mounted in the carriage (3) along the axial direction (Z), bearing on a stop (30) of the carriage (3) in the inactive and retaining positions thereof, and applied on each stationary contact (22) in the final interlocking position of the carriage (3);
- a first spring (41) housed in the carriage (3), prestressed in compression, and exhibiting a first end (411) exerting on the mobile contact (22), in the axial direction (Z), an elastic force directed towards the stationary contact (21);
- actuating means (5) comprising an eccentric (51) and a coupling link (52) whereof a first end (521) is linked to the eccentric (51), these actuating means (5) being maneuverable outside the case (1) from a rest position towards a final interlocking position through an engagement position and a release position, and being designed to selectively exert in the axial direction (Z), on a second end (412) of the first spring (41), and by means of a second end (522) of the coupling link (52), a force directed towards the stationary contact (21) adapted to increase the compression of the first spring (41);
- and retaining means (6) comprising a retaining member (61) linked to the case (1) and designed to maintain the carriage (3) in its retaining position for any position of the actuating means (5) ranging between their engagement position and their release position, and to free the carriage (3) once the actuating means (5) cross their release position, the

carriage (3) thus being suddenly moved towards its final interlocking position by partial expansion of the first spring (41),

characterized in that the retaining member linked to the case (1) is constituted by a case shoulder (61), in that the retaining means (6) further comprise a pawl (62) pivotally mounted on the carriage (3) around a swivel axis (X), in that the pawl (62) comprises at least a first cam element (621) obliquely extending with respect to the axial direction (Z) and a supporting surface (623) cooperating with said shoulder (61) in order to maintain the carriage (3) in its retaining position, in that the second end (522) of the coupling link (52) cooperates with the first cam element (621) to cause, when the actuating means (5) pass from their engagement position to their release position, a corresponding swivel of the pawl (62) in a first direction (D) around its swivel axis (X), and in that said supporting surface (623) of the pawl (62) moves away from the shoulder (61) of the case (1) when the actuating means (5) cross their release position.

2. The electrical current interrupting device according to claim 1, characterized in that the first spring (41) is a helical spring.

3. The electrical current interrupting device according to any one of the preceding claims, characterized in that the second end (522) of the coupling link (52) extends transversally to the axial direction (Z) and presses directly on the second end (412) of the first spring (41).

4. The electrical current interrupting device according to any one of the preceding claims, characterized in that the case (1) exhibits a bottom wall (10), and in that the shoulder (61) is integrally formed with the bottom wall (10).

5. The electrical current interrupting device according to claim 4, characterized in that the carriage (3) exhibits a

rear side (31) arranged facing the bottom wall (10) of the case (1), and in that the pawl (62) is pivotally mounted on the rear side (31) of the carriage (3).

6. The electrical current interrupting device according to claims 3 and 5, characterized in that the rear side (31) of the carriage (3) exhibits a slit (310) parallel to the axial direction (Z), in that the second end (522) of the coupling link (52) crosses this slit (310), and in that this slit (310) is designed to guide the second end (522) of the coupling link (52) in the axial direction (Z).

7. The electrical current interrupting device according to claim 6, characterized in that the carriage (3) exhibits a front side (32) arranged parallely and at a distance from its rear side (31), and in that this front side (32) is also crossed by the second end (522) of the coupling link (52).

8. The electrical current interrupting device according to any one of the preceding claims, characterized in that the first cam element (621) of the pawl (62) is arranged between the swivel axis (X) and the supporting surface (623) of this pawl (62) in that this pawl (62) comprises a second cam element (622) extending substantially parallely to the first cam element (621) and arranged between said first cam element (621) and the swivel axis (X) of the pawl (62), and in that the second end (522) of the coupling link (52) cooperates with the second cam element (622) to cause, when the carriage (3) passes from its final interlocking position to its inactive position, a corresponding swivel of the pawl (62) in a second direction (A) around its swivel axis (X), repositioning the supporting surface (623) of the pawl (62) in a position of latent engagement with the shoulder (61) of the case (1).

9. The electrical current interrupting device according to any one of the preceding claims, characterized in that the pawl (62) exhibits a hole (620) delimited by a closed edge and arranged between the swivel axis (X) and the supporting

surface (623) of this pawl (62), and in that each cam element (621, 622) of the pawl (62) is defined by a portion of the edge of said hole (620).

10. The electrical current interrupting device according to any one of the preceding claims, characterized in that it comprises a second spring (42) prestressed in compression between the case (1) and the carriage (3), this second spring (42) permanently biasing the carriage (3) towards its inactive position.

Dated this 09/03/2012

HRISHIKESH RAY CHAUDHURY
OF REMFRY & SAGAR
ATTORNEY FOR THE APPLICANTS

1/7

ORIGINAL
677/DEL/12
09 MAR 2012

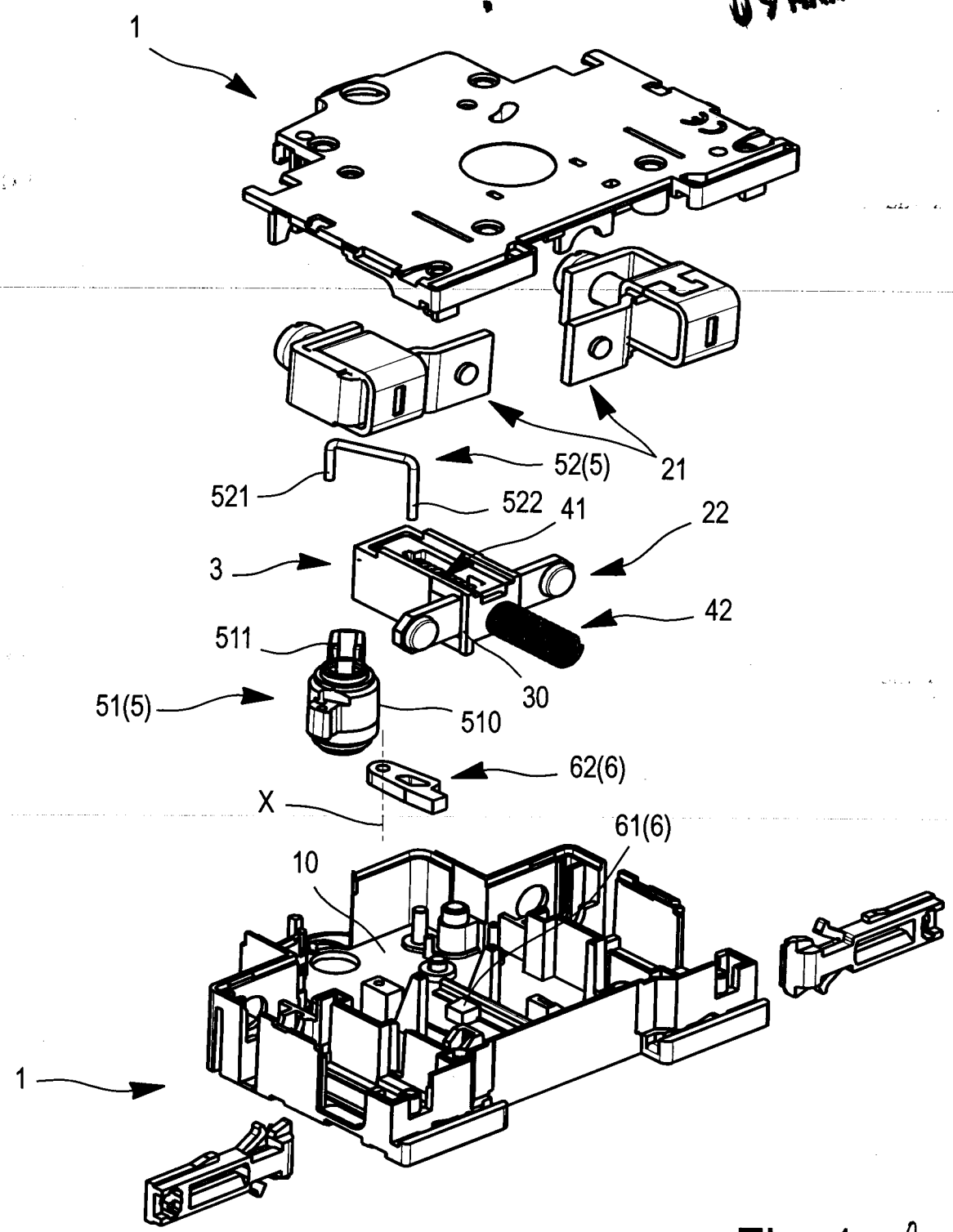

Fig. 1

(HRISHIKESH RAY CHAUDHURY)
OF REMFRY & SAGAR
ATTORNEY FOR THE APPLICANTS

ORIGINAL

2 / 7

677DEL12

09 MAR 2012

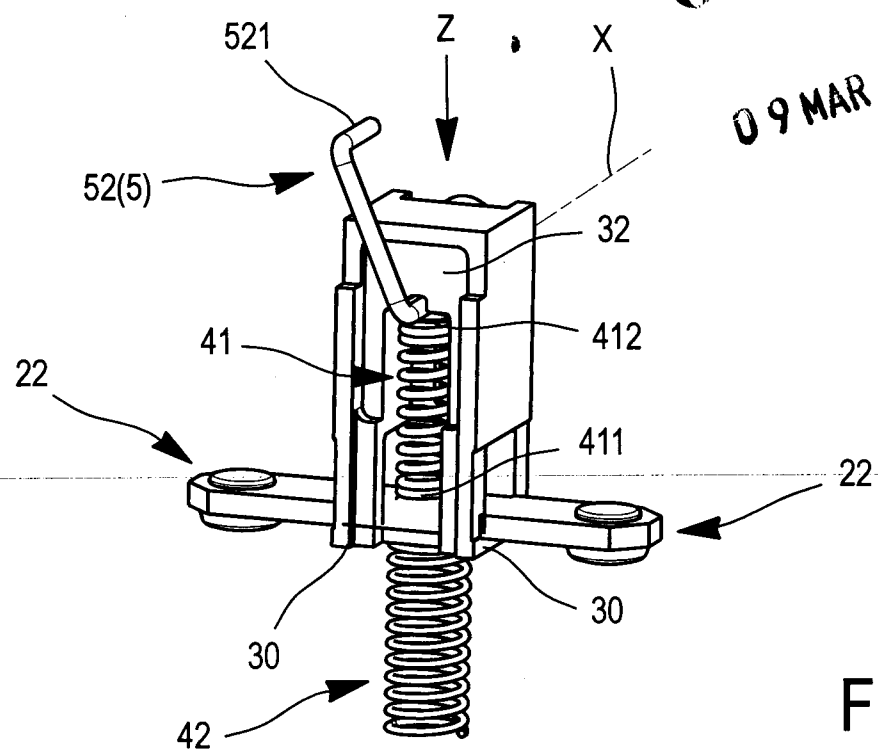

Fig. 2

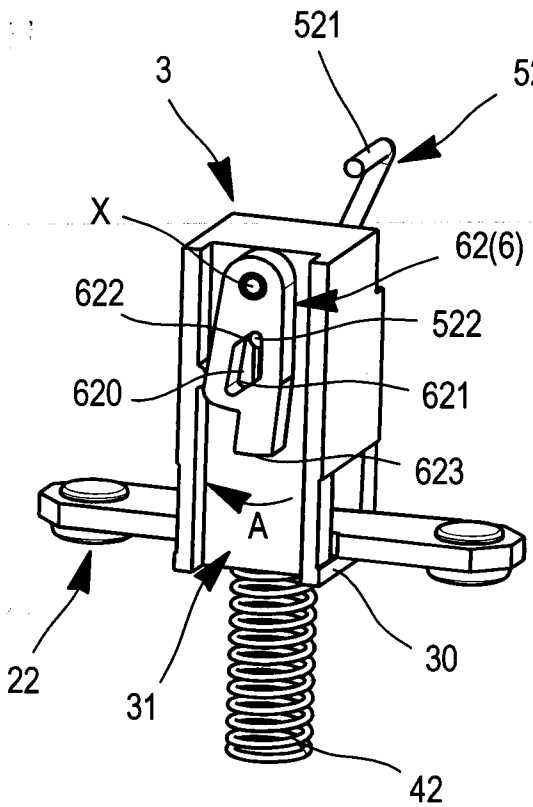

Fig. 3

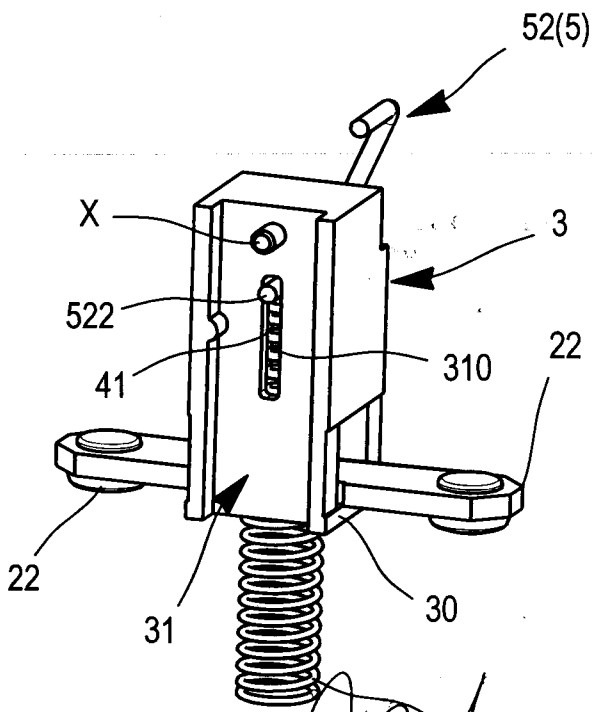

Fig. 4

(HRISHIKESH RAY CHAUDHURY)
OF REMFRY & SAGAR
ATTORNEY FOR THE APPLICANTS

3 / 7

ORIGINAL

09 MAR 2012

677 DEL 12

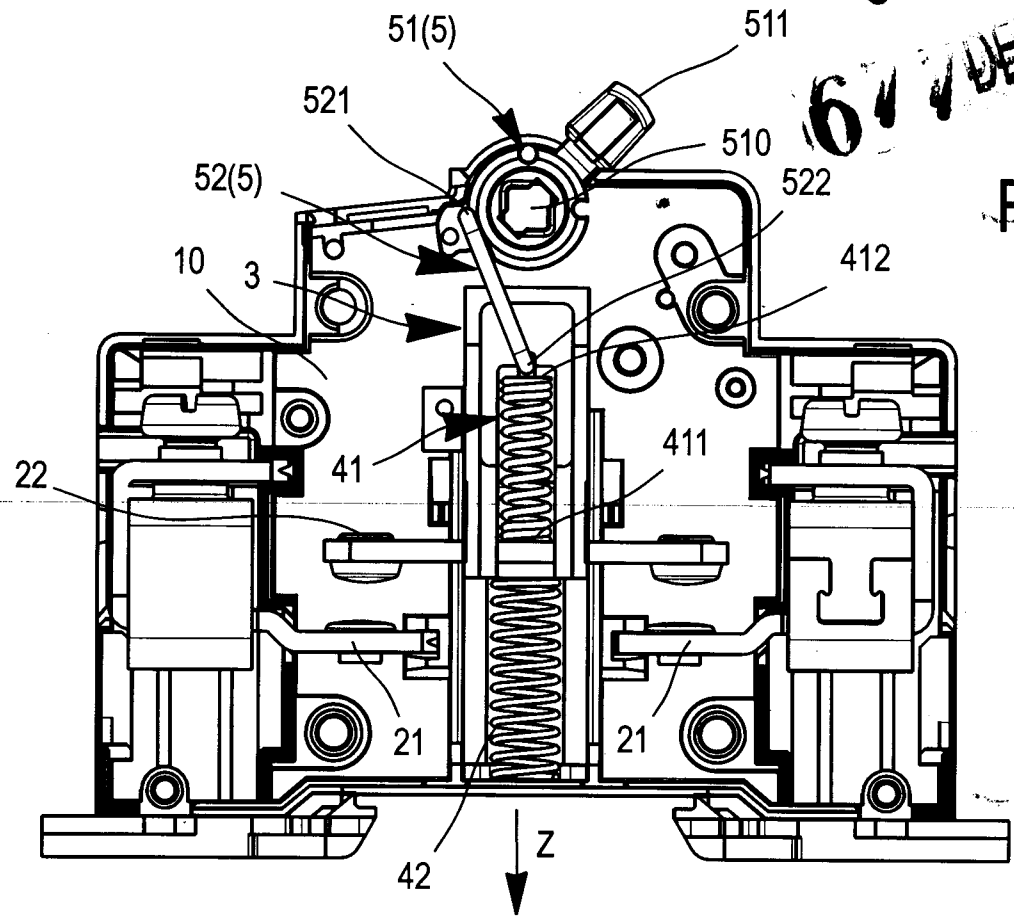

Fig. 5

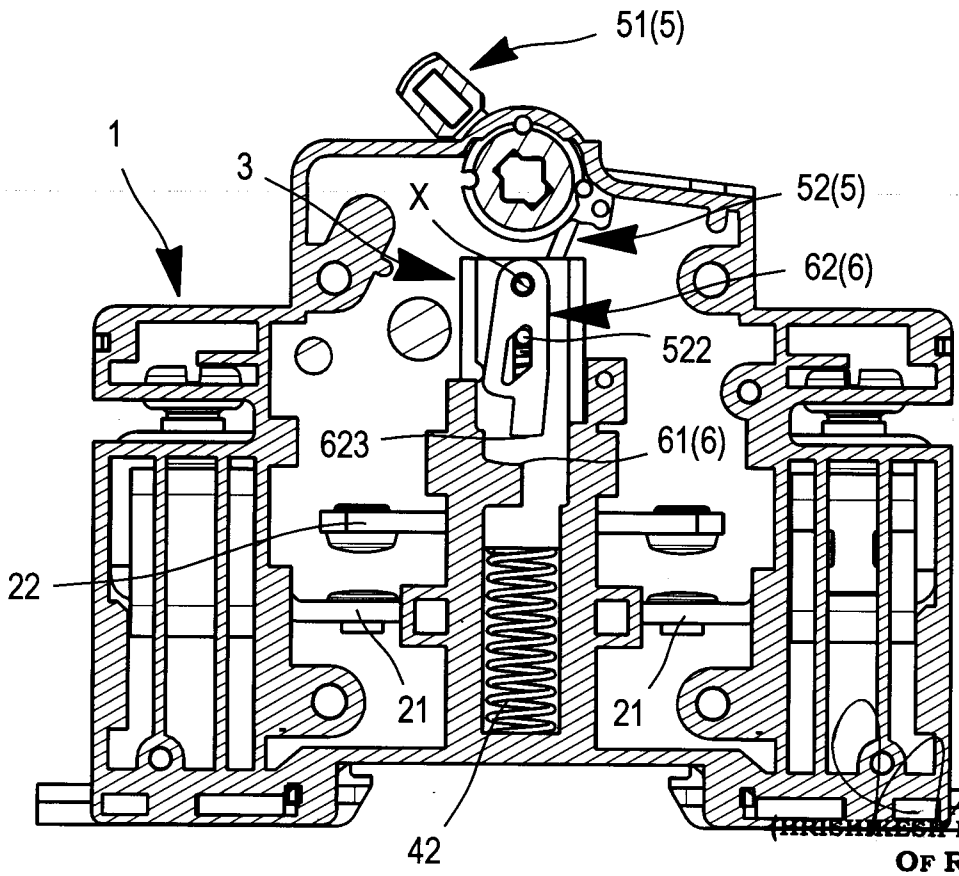

Fig. 6

(HRISHIKESH RAY CHAUDHURY)
OF REMFRY & SAGAR
ATTORNEY FOR THE APPLICANTS

ORIGINAL
4 / 7
09 MAR 2012

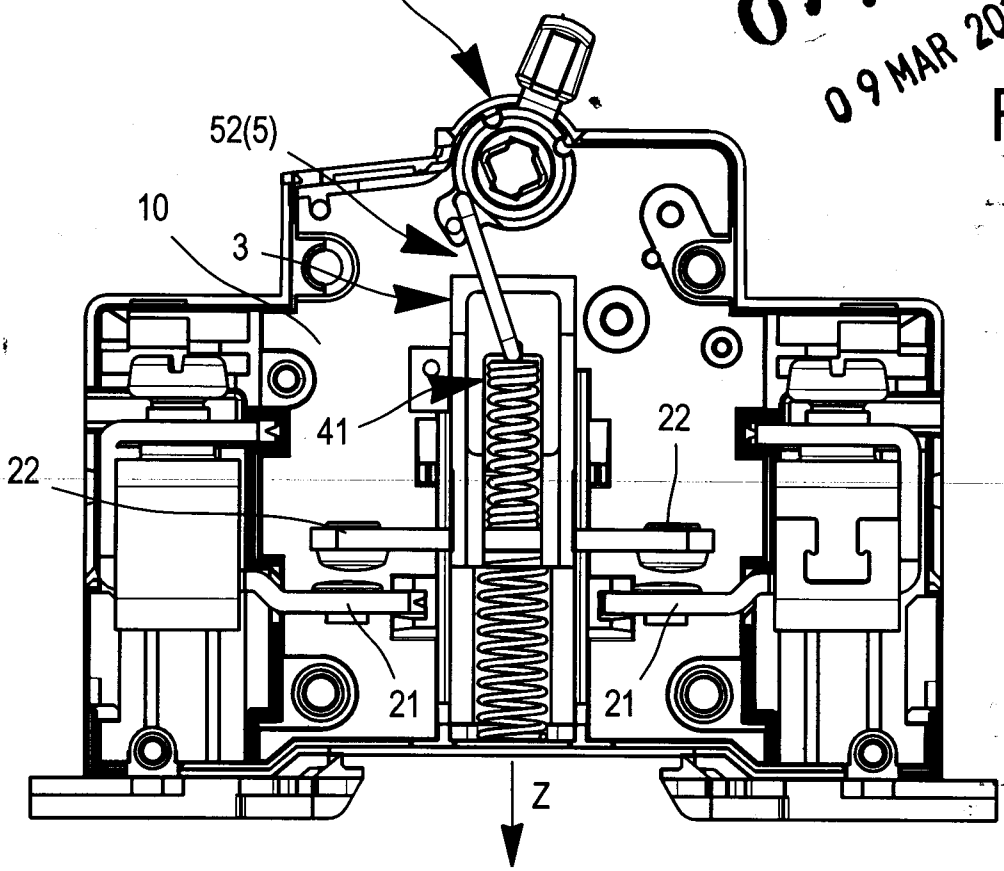

Fig. 7

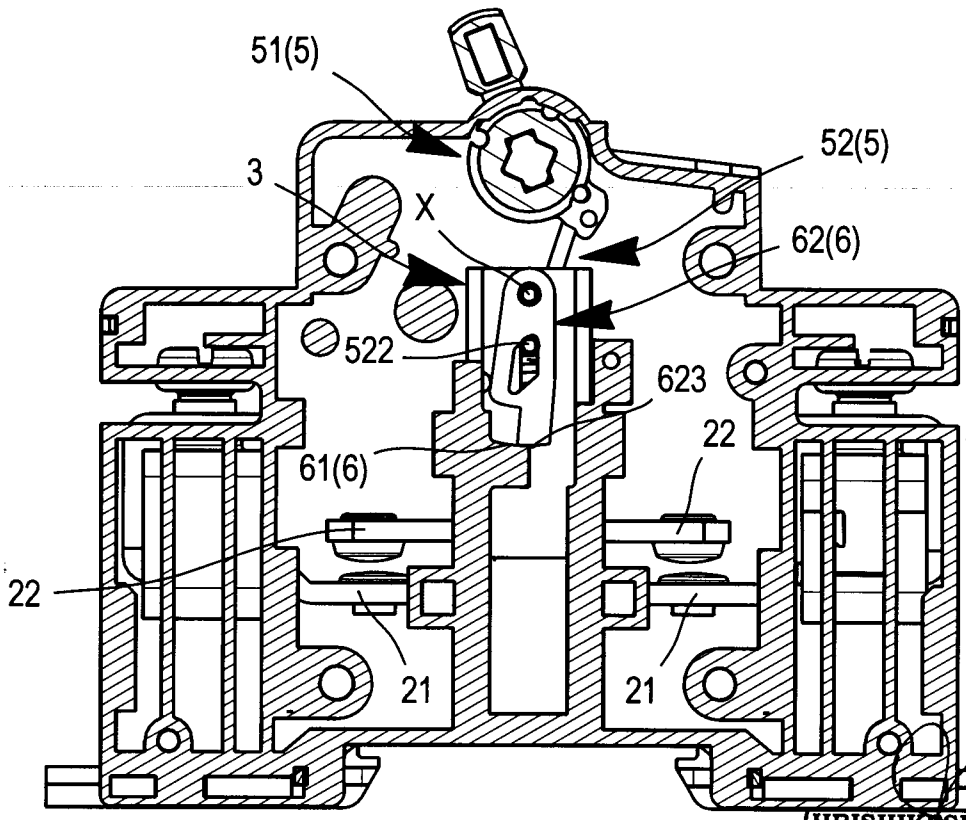

Fig. 8

(HRISHIKESH RAY CHAUDHURY)
OF REMFRY & SAGAR
ATTORNEY FOR THE APPLICANTS

ORIGINAL

5 / 7

677/DEL/12
09 MAR 2012

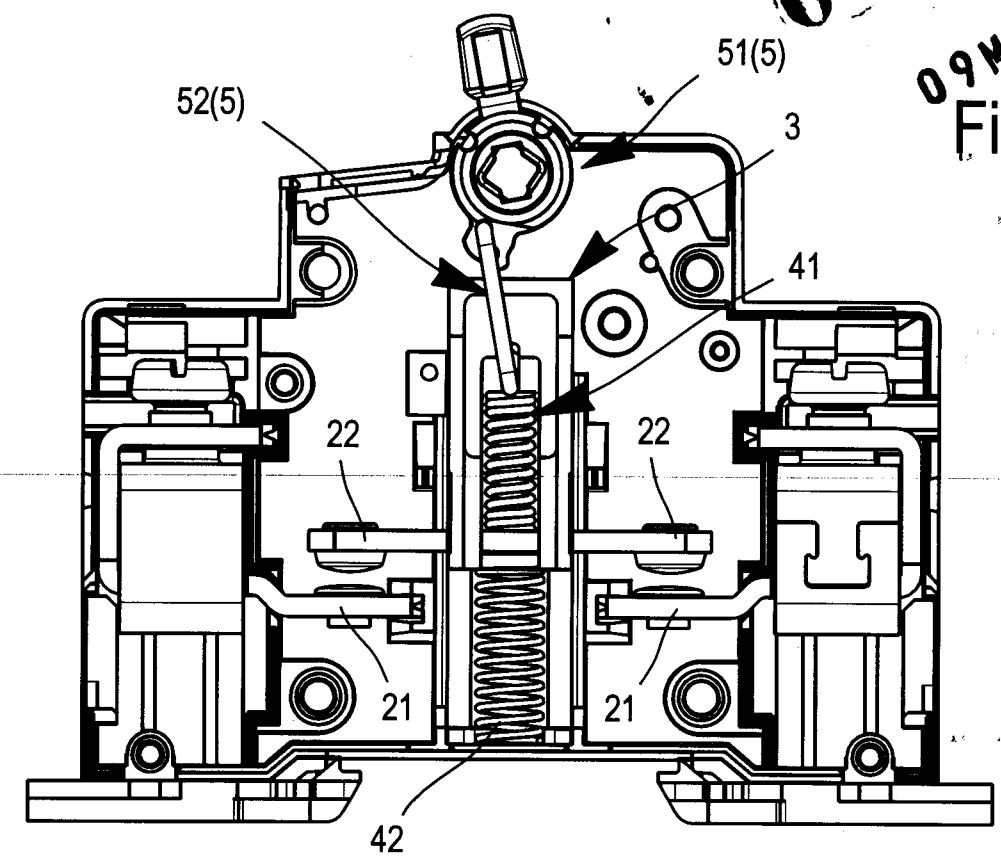

Fig. 9

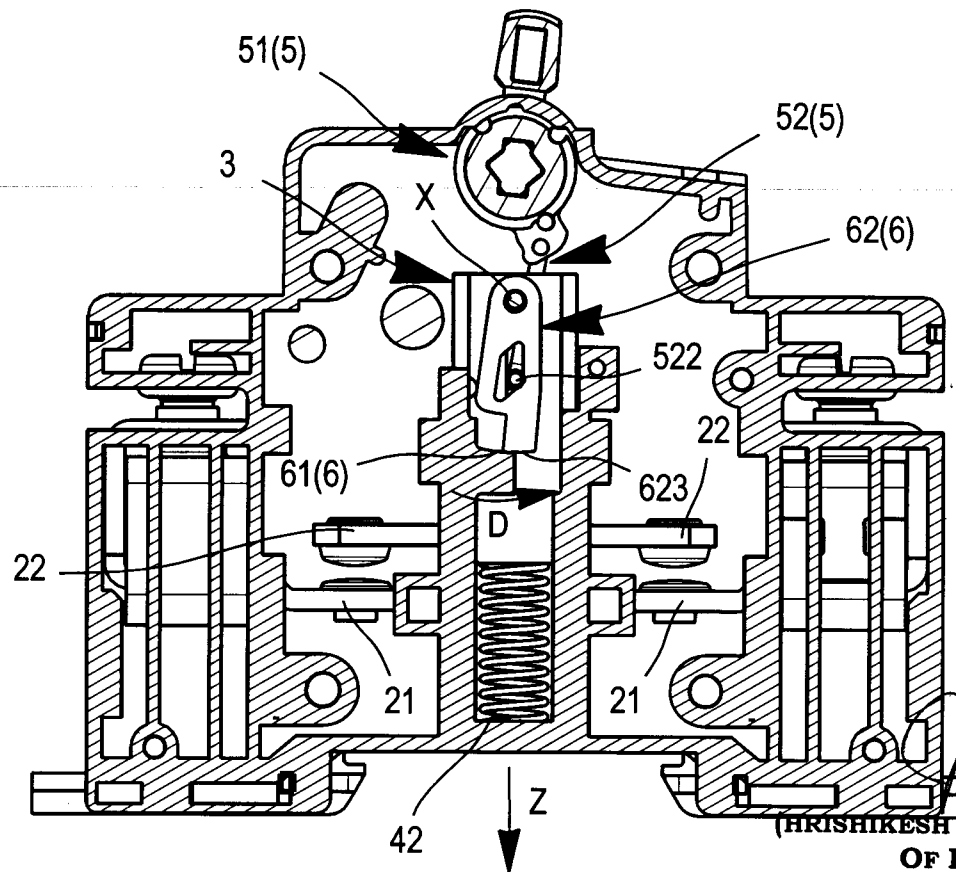

Fig. 10

(HRISHIKESH RAY CHAUDHURY)
OF REMFRY & SAGAR
ATTORNEY FOR THE APPLICANTS

6/7 ORIGINAL

6/7/DEL12

09 MAR 2012

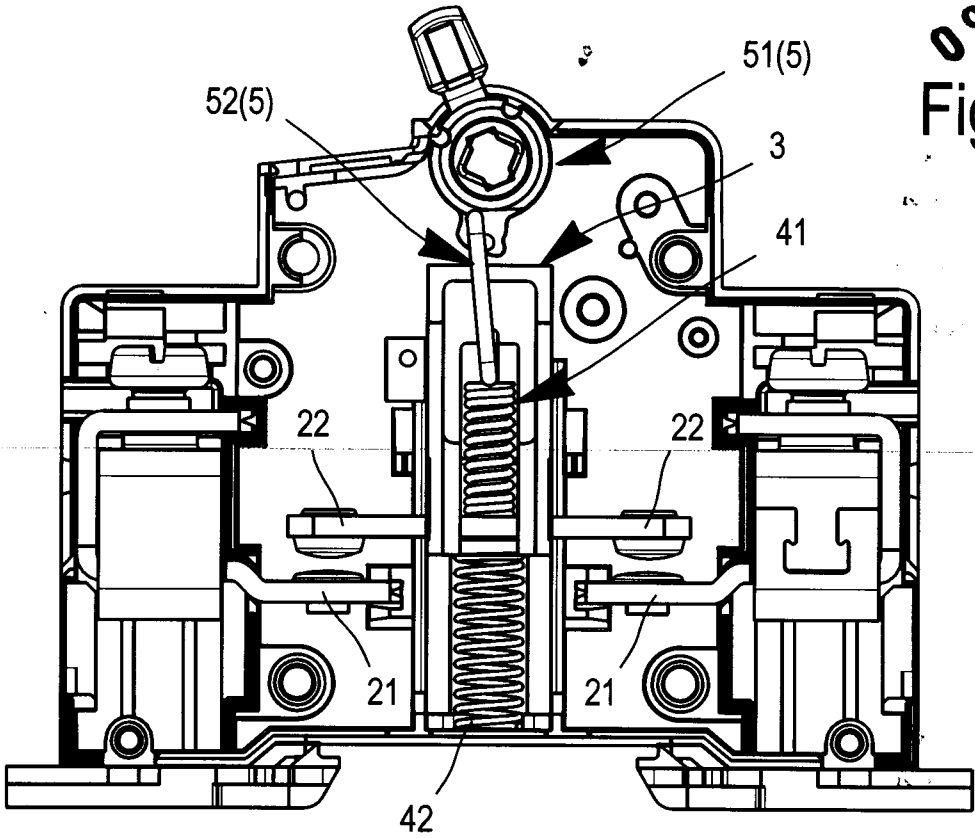

Fig. 11

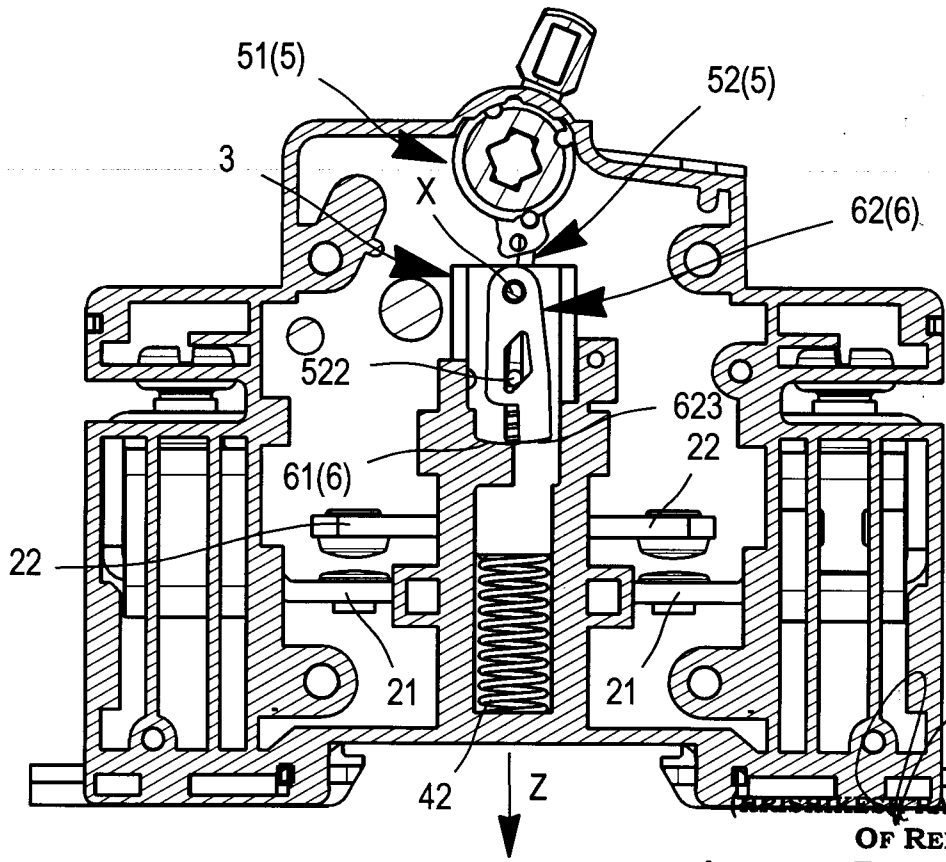

Fig. 12

(KRISHNENDU RAY CHAUDHURY)
OF REMFRY & SAGAR
ATTORNEY FOR THE APPLICANTS

ORIGINAL
7/7

67/DEL/12
09 MAR 2012

Fig. 13

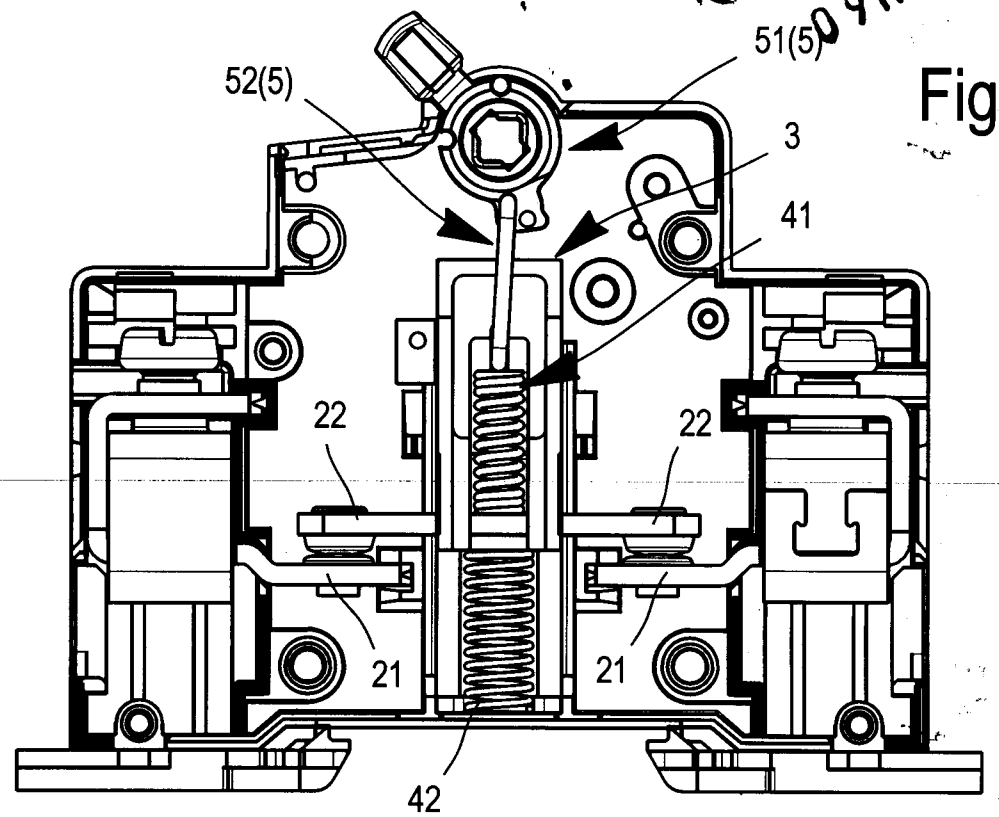

Fig. 14

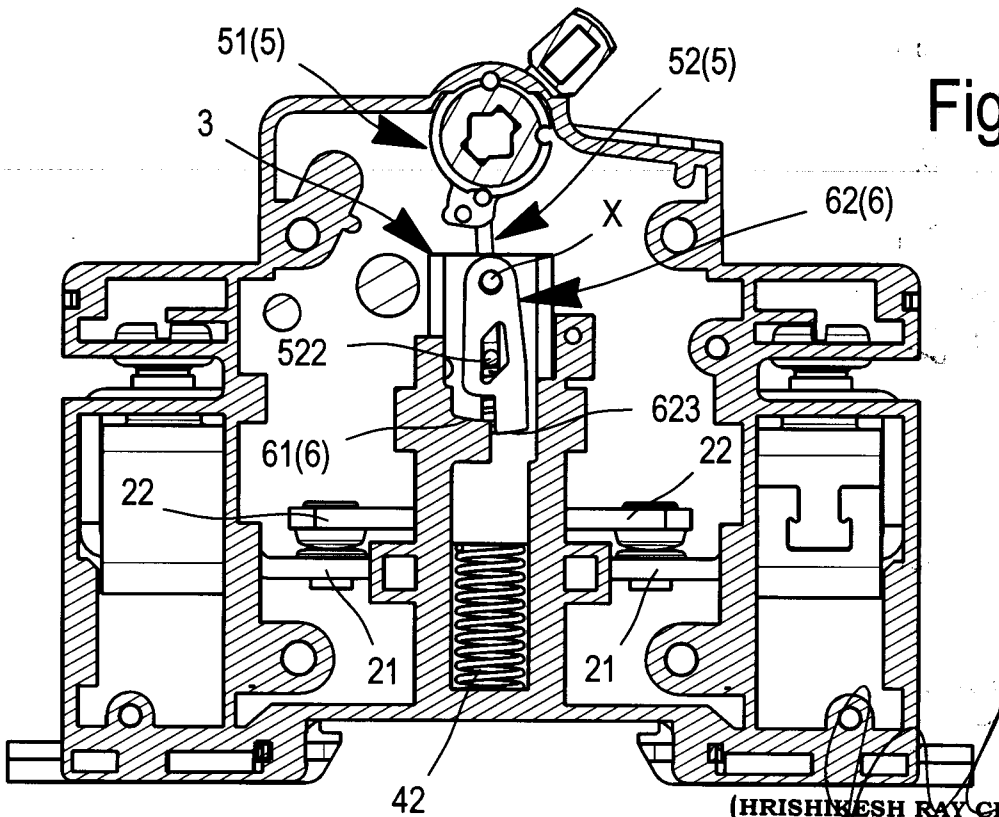

(HRISHIKESH RAY CHAUDHURY)
OF REMFRY & SAGAR
ATTORNEY FOR THE APPLICANTS

DEVICE TO INTERRUPT ELECTRICAL CURRENT WITH A SIMPLIFIED STRUCTURE

The invention generally relates to the field of electrical equipments.

More specifically, the invention relates to a device for interrupting electrical current, such as a switch disconnector, comprising:

- a case;
- at least a stationary contact secured to the case;
- a carriage slidingly mounted in the case along an axial direction from an inactive position, through a retaining position, to a final interlocking position;
- a mobile contact slidingly mounted in the carriage along the axial direction, bearing on a carriage stop in the inactive and retaining positions thereof, and applied on each stationary contact in the final interlocking position of the carriage;
- a first spring housed in the carriage, prestressed in compression, and exhibiting a first end exerting on the mobile contact, along the axial direction, an elastic force directed towards the stationary contact;
- actuating means comprising an eccentric and a coupling link whereof a first end is linked to the eccentric, these actuating means being maneuverable outside the case from a rest position towards a final interlocking position via an engagement position and a release position, and being designed to selectively exert, along the axial direction, on a second end of the first spring, and by means of a second end of the coupling link, a force directed towards the stationary contact in a direction adapted to increase the compression of the first spring;
- and retaining means comprising a retaining member linked to the case and designed to maintain the carriage in its retaining position for any position of the actuating means ranging between their engagement position and their release

position, and to free the carriage once the actuating means cross their release position, the carriage thus, being suddenly moved towards its final interlocking position by partial expansion of the first spring.

A device of this type is for example described in US patent US 7 115 829.

In this type of device, the making of the retaining means is subjected to two antinomic constraints which are represented on the one hand by the necessity to provide this device with a reliable and reproducible operation, and on the other hand the wish to obtain this operation quality with a structure that is as simple as possible.

In this context, the present invention aims at providing a device for interrupting an electric current, such as a switch-disconnector, whereof the retaining means very effectively meet this need.

To this end, the interrupting device of the invention, which is further in accordance with the generic definition given in the preamble above, is substantially characterized in that the retaining member linked to the case is constituted by a case shoulder, in that the retaining means further comprise a pawl pivotally mounted on the carriage around a swivel axis, in that this pawl comprises at least a first cam element extending obliquely with respect to the axial direction and a supporting surface cooperating with said shoulder in order to maintain the carriage in its retaining position, in that the second end of the coupling link cooperates with the first cam element, to cause, when the actuating means pass from their engagement position to their release position, a corresponding swivel of the pawl in a first direction around its swivel axis, and in that said supporting surface of the pawl moves away from the case shoulder once the actuating means cross their release position.

In a manner known per se, the first spring may be constituted by a helical spring.

Preferably, the second end of the coupling link extends transversally to the axial direction and presses directly on the second end of the first spring.

Furthermore, the shoulder is integrally formed with the bottom wall whereof the case is traditionally provided.

Particularly in this case, the carriage may exhibit a rear side which is arranged facing the bottom wall of the case, and whereon the pawl is pivotally mounted.

Thus, it is judicious to provide the rear side of the carriage such that it exhibits a slit parallel to the axial direction, that the second end of the coupling link crosses this slit, and that this slit is designed, at least through its dimensions, to be able to guide the second end of the coupling link in the axial direction.

The carriage may also exhibit a front side arranged parallely and at a distance from its rear side, and this front side may also be crossed by the second end of the coupling link.

In the preferred embodiment of the invention, it is provided that the first cam element of the pawl be arranged between the swivel axis and the supporting surface of this pawl, that this pawl comprises a second cam element extending substantially parallel to the first cam element and arranged between said first cam element and the swivel axis of the pawl, and that the second end of the coupling link cooperates with the second cam element to cause, while the carriage passes from its final interlocking position to its inactive position, a corresponding swivel of the pawl in a second direction around its swivel axis, repositioning the supporting

surface of the pawl in a position of latent engagement with the case shoulder.

The pawl exhibits for example a hole delimited by a closed edge and arranged between the swivel axis and the supporting surface of this pawl, each cam element of the pawl may thus be defined by a portion of the edge of said hole.

In a manner known per se, this electric current interrupting device electric may also comprise a second spring prestressed in compression between the case and the carriage, this second spring permanently elastically biasing the carriage towards its inactive position.

Other characteristics and advantages of the invention will become apparent from the reading of the following description, given for reference only and in no way limitative, with reference to the accompanying drawings, wherein:

-fig.1 is a perspective exploded view of a device in accordance with a possible embodiment of the invention;

-fig.2 is a perspective enlarged view of a functional sub-assembly of the device of fig.1, this sub-assembly particularly comprising the carriage seen from its front side;

-fig 3 is a perspective enlarged view of a functional sub-assembly of the device of fig.1, this sub-assembly particularly comprising the carriage seen from its rear side provided with the pawl;

-fig4 is a view illustrating the sub-assembly visible on fig.3, such as it is exhibited before mounting the pawl onto the carriage;

-fig.5 is a partial elevation view of a device conforming to a possible embodiment of the invention, observed in the

rest position of the actuating means, and from the front side of the carriage;

-fig.6 is a partial elevation view of the device of fig.5, observed in the rest position of the actuating means, and from the rear side of the carriage;

-fig.7 is a partial elevation view of the device of figs. 5 and 6, observed in the engagement position of the actuating means, and from the front side of the carriage;

-fig.8 is a partial elevation view of the device of figs.5 to 7, observed in the engagement position of the actuating means, and from the rear side of the carriage;

-fig.9 is a partial elevation view of the device of figs.5 to 8, observed in an intermediary position of the actuating means between their engagement position and their release position, and from the front side of the carriage;

- fig.10 is a partial elevation view of the device of figs.5 to 9, observed in an intermediary position of the actuating means between their engagement position and their release position, and from the rear side of the carriage;

-fig.11 is a partial elevation view of the device of figs.5 to 10, observed in a highly transitory state corresponding to the release position of the actuating means, and from the front side of the carriage;

-fig.12 is a partial elevation view of the device of figs.5 to 11, observed in a highly transitory state corresponding to the release position of the actuating means, and from the rear side of the carriage;

-fig.13 is partial elevation view of the device of figs. 5 to 12, observed in the final interlocking position of the actuating means and from the front side of the carriage.

-fig.14 is partial elevation view of the device of figs. 5 to 13, observed in the final interlocking position of the actuating means and from the rear side of the carriage.

The main members illustrated on these figs. and evoked in the present description are marked by references between parentheses or not, the references between parentheses being assigned to the assemblies to which belong the members marked by the reverences without parentheses.

As previously indicated, the invention relates to a device for interrupting electric current, such as a switch-disconnector.

Such a device comprises, in a known manner, a case 1, one or several stationary contacts 21 secured to the case 1, a mobile contact 22, a carriage 3, a spring 41, actuating means 5, and retaining means 6.

The carriage 3 is slidingly mounted in the case 1, along an axial direction Z vertically represented on figs. 2 to 14, from an inactive position visible on figs. 5 and 6, through a retaining position visible on figs. 7 to 10, to a final interlocking position visible on figs. 13 and 14.

Secondarily, such a device generally also comprises a second spring 42 prestressed in compression between the case 1 and the carriage 3, this second spring 42 being for example constituted by a helical spring and permanently biases the carriage 3 towards its inactive position.

This mobile contact 22 is slidingly mounted in the carriage 3 along the axial direction Z.

This mobile contact 22, bearing against a stop 30 of the carriage 3 in the inactive position (fig.5 and 6) and in the

retaining position (figs.7 to 10) of this carriage 3, is nevertheless applied on each stationary contact 22 in the final interlocking position of the carriage 3 (figs.13 and 14).

The spring 41, which is preferably also constituted by a helical spring, is housed in the carriage 3 and is prestressed in compression.

The end 411 of the spring 41, i.e., the lower end of this spring on figs. thus exerts, on the mobile contact 22 and along the axial direction Z, an elastic force directed towards the stationary contact 21, i.e., towards the bottom on figs. 2 to 14. This elastic force is hence antagonistic to that exerted by the spring 42, but of higher value.

The function of the actuating means 5, which comprise an eccentric 51 and a coupling link 52, is to increase the compression of the spring 41 to be able to move the carriage 3 from its inactive position towards its final interlocking position against the antagonistic return force exerted on the carriage 3 by the second spring 42.

To this end, the eccentric 51, which is mounted in rotation in the case 1 around its spindle 510, exhibits a handle 511 making it possible to maneuver it from the outside of the case 1.

Furthermore, the coupling link 52 exhibits an end 521 cinematically linked to the eccentric 51 and an end 522 acting on the end 412 of the spring 41, i.e., on the higher end of this spring 41 in the arrangement illustrated in figs. 2 to 14.

An action on the handle 511, exerted on the outside of the case 1 hence makes it possible to cause the eccentric 51 to rotate around its spindle 510 and the coupling link 52 to slide.

More precisely, the eccentric 51 and the coupling link 52 may thus be simultaneously moved from a rest position visible on figs. 5 and 6, towards a final interlocking position visible on figs. 13 and 14, particularly passing via an engagement position visible on figs. 7 and 8, and by a release position visible on figs.11 and 12.

During this movement, the actuating means 5 act on the end 412 of the spring 41, by means of the end 522 of the coupling link 52, and along the axial direction Z, a force which is directed towards the stationary contact 21, i.e. downwards on figs. 2 to 14, and which has for effect to increase the compression of the spring 41 from an engagement position of these actuating means, illustrated in figs. 7 and 8.

The retaining means 6, which comprise a retaining member 61 linked to the case 1, are designed to maintain the carriage 3 in its retaining position (figs.7 to 10) for any position of the actuating means 5 ranging between their engagement position (figs.7 and 8) and their release position (figs.11 and 12), and to free the carriage 3 when the actuating means 5 cross their release position (figs.11 and 12).

When the actuating means 5 cross their release position, the carriage 3 is suddenly moved towards its final interlocking position by partial expansion of the spring 41, already highly prestressed by these actuating means 5.

In this context, the contribution of the invention mainly relates to simplifying the retaining means 6.

According to the invention, the retaining member linked to the case 1 is constituted by a shoulder 61 of the case, and these retaining means 6 further comprise a pawl 62 pivotally mounted on the carriage 3 around a swivel axis X, preferably transversal to the axial direction Z.

The pawl 62 comprises (fig.3) a cam element 621 which extends obliquely with respect to the axial direction Z, and a supporting surface 623 which cooperates with the shoulder 61 to maintain the carriage 3 in its retaining position.

Between the rest position (figs.5 and 6) and the engagement position (figs.7 and 8) of the actuating means 5, the spring 42 is progressively compressed and the supporting surface 623 of the pawl 62 gets closer to the shoulder 61 until it comes in contact with it in the engagement position of these actuating means 5.

Then, the bearing of the supporting surface 623 on the shoulder 61 makes it possible to maintain the carriage 3 in its retaining position while the actuating means 5, having surpassed their engagement position, continue moving towards their release position, as shown in figs. 9 and 10, and progressively compress the spring 41.

Furthermore, the end 522 of the coupling link 52 cooperates with the cam element 621 to cause, while the actuating means 5 pass from their engagement position to their release position, a corresponding swivel of the pawl 62 in the D relieving direction around its swivel axis X (fig.10).

This swivel is dimensioned such that, when the actuating means 5 cross their release position (fig.12), the supporting surface 623 of the pawl 62 moves away from the shoulder 61 of the case 1, thus making the spring 41 able to suddenly move the carriage 3 towards its final interlocking position.

In fact, as figs. 8, 10 and 12 show, the cam element 621 may be fashioned such that the end 522 of the coupling link 52 only causes the pawl 62 to swivel from an intermediary position illustrated in fig.10, i.e., only next to the end of the passage of the actuating means 5 from their engagement position towards their release position.

Preferably, as fig.1 particularly shows, the ends 521 and 522 of the coupling link 52 extend at the same time transversally to the axial direction Z, and transversally to the median portion of the coupling link which connects these ends.

Thus, it is possible to provide that the end 522 of the coupling link 52 presses directly on the end 412 of the spring 41 without resorting to an additional piece.

Advantageously, the shoulder 61 may be formed with the bottom wall 10 whereof the case 1 is provided.

The pawl 62 is for example pivotally mounted on the rear side 31 of the carriage 3, i.e., on the side of the carriage 3 which is arranged facing the bottom wall 10 of the case 1.

In this case, it is preferable that the end 522 of the coupling link 52 also crosses the front side 32 of the carriage 3, i.e., the side of this carriage which is arranged parallely and at a distance from the rear side 31.

It may also be judicious to provide the rear side 31 of the carriage 3 such that it exhibits a slit 310 parallel to the axial direction Z, and that this slit 310 be crossed by the end 522 of the coupling link 52 in order to ensure the guiding of this end 522.

In order to optimize the stability of the pawl 62 and reduce the bulk of the retaining means 6, the cam element 621 of the pawl is advantageously arranged between the swivel axis X and the supporting surface 623 of this pawl 62.

The pawl 62 may also comprise another cam element 622, which extends in at least an approximately parallel manner to the cam element 621 and which is arranged between this cam element 621 and the swivel axis X of the pawl 62.

The end 522 of the coupling link 52 may thus cooperate with this second cam element 622 to cause, when the carriage 3 passes from its final interlocking position to its inactive position, a corresponding swivel of the pawl 62 in the direction of the protector A around its swivel axis X (fig.3), this swivel making it possible to reposition the supporting surface 623 of the pawl 62 in a position of latent engagement with the shoulder 61 of the case 1 without resorting to an additional spring.

As fig.3 also shows, the pawl 62 may exhibit a hole 620 delimited by a closed edge and arranged between the swivel axis X and the supporting surface 623 of this pawl 62, such that each of the cam elements 621 and 622 of this pawl may be defined by a portion corresponding to the edge of this hole 620.