No. 612,591. Patented Oct. 18, 1898.

F. D. E. MANZEL.

AIR SUPPLY AND VENT DEVICE FOR BEER KEGS.

(Application filed July 13, 1898.)

(No Model.)

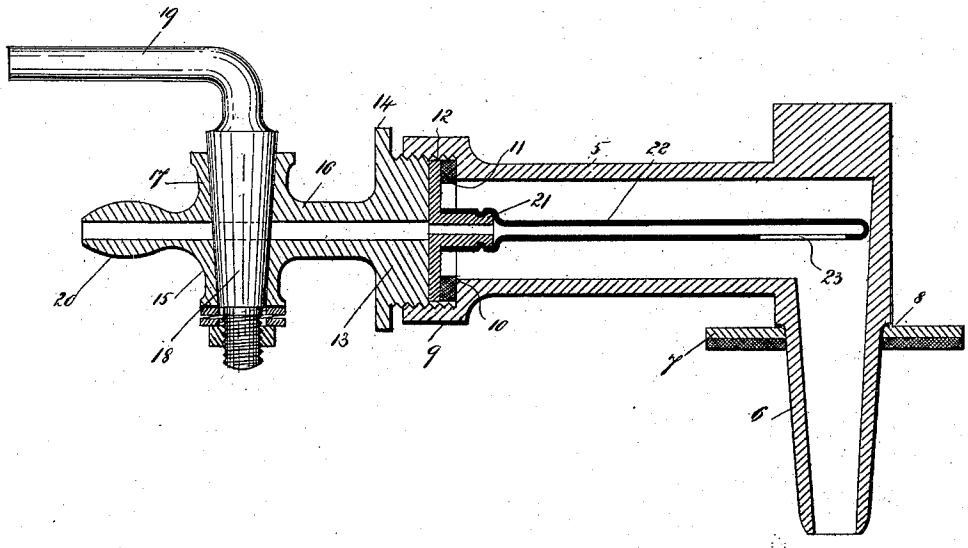

WITNESSES

John Buckler,

F. A. Stuart

INVENTOR

F. D. Emil Manzel,

BY

Edgar Tate & Co

ATTORNEYS

THE NORRIS PETERS CO., PHOTO-LITHO., WASHINGTON, D. C.

UNITED STATES PATENT OFFICE.

FRANZ DANIEL EMIL MANZEL, OF NEW YORK, N. Y.

AIR-SUPPLY AND VENT DEVICE FOR BEER-KEGS.

SPECIFICATION forming part of Letters Patent No. 612,591, dated October 18, 1898.

Application filed July 13, 1898. Serial No. 685,810. (No model.)

To all whom it may concern:

Be it known that I, FRANZ DANIEL EMIL MANZEL, a citizen of the United States, residing at New York, (Fort Wadsworth,) in the county of Richmond and State of New York, have invented certain new and useful Improvements in Air-Supply and Vent Devices for Beer-Kegs, of which the following is a full and complete specification, such as will enable those skilled in the art to which it appertains to make and use the same.

This invention relates to devices for supplying air under pressure to beer kegs, barrels, and similar vessels; and the object thereof is to provide an improved device of this class which is also designed to serve as a vent for such vessels.

The invention is fully disclosed in the following specification, of which the accompanying drawing forms a part, said drawing being a sectional side elevation of a device of the character described constructed according to my invention.

In the drawing forming part of this specification the separate parts of my improvement are designated by the same numerals of reference, and in the practice of my invention I provide a device of the character described which comprises a tubular casing 5, provided at one end with a conical nozzle 6, which is adapted to be driven into the keg or barrel in the usual manner, and which is provided with a packing-washer 7 and an annular shoulder or projection 8, against which said packing-washer presses. The opposite end of the casing 5 is provided with an enlarged cylindrical head 9, which is screw-threaded interiorly and whereby an annular shoulder or projection 10 is formed, and placed on said shoulder or projection is a packing-ring 11, and mounted in said annular head and adapted to bear on said packing-ring is a disk or plate 12, which is held in place by a screw-threaded head 13, which is adapted to be screwed into the annular head 9 of the casing 5 and which is provided with an annular flange or rim 14 and a faucet 15 of the usual or any preferred form of construction.

As shown, the faucet consists of a tubular extension 16, formed on the screw-threaded head 13, said tubular extension being provided with a valve-casing 17, in which is mounted a valve 18, provided with a handle 19, and the valve-casing 17 is provided with a nozzle 20, with which a rubber hose or other flexible tube is connected, through which air under pressure is passed.

The disk or plate 12 is provided with an inwardly-directed tubular extension 21, with which is connected a rubber tube 22, the inner end of which is closed and provided with a side opening 23, and the interior of the tube 22 is in communication with the central bore of the tubular extension 21 of the disk or plate 12, which passes through said disk or plate, and also with the central bore or passage through the faucet 15.

The operation will be readily understood from the foregoing description when taken in connection with the accompanying drawing and the following statement thereof.

When the device is intended for use as a vent, the tubular air-nozzle or extension 16 is driven into the keg or barrel in the usual manner and the valve 18 of the faucet opened, and when said device is intended for use in supplying air under pressure to the keg or barrel a flexible hose is connected with the nozzle 20 of the faucet and air under pressure is forced therethrough.

My improvement is simple in construction and operation and well adapted to accomplish the result for which it is intended, and it will be apparent that changes in and modifications of the construction herein described may be made without departing from the spirit of my invention or sacrificing its advantages.

Having fully described my invention, I claim as new and desire to secure by Letters Patent—

1. A device of the character herein described, comprising a tubular casing provided at one end with an angular tubular extension or nozzle which is adapted to be driven into a keg or barrel, and at the opposite end with an enlarged annular head, a disk or plate mounted in said annular head and provided with an inwardly-directed tubular extension, and a tube secured to said extension and projecting longitudinally through said casing and provided with an opening at or near its inner

end, a screw-threaded head which is adapted to be screwed into said annular head and which is provided with a faucet, substantially as shown and described.

2. A device of the character herein described, comprising a tubular casing provided at one end with an angular tubular extension or nozzle, and at the opposite end with an enlarged annular head whereby an annular shoulder is formed, a packing-ring placed on said annular shoulder, a disk or plate placed in said head and adapted to press on said packing-ring, said disk or plate being provided with a central port or passage and with an inwardly-directed tubular extension which communicates therewith, a rubber tube secured to said tubular extension and projecting through said tubular casing, and provided at or near its inner end with an opening, and a screw-threaded head provided with a faucet and adapted to be screwed into said annular head, said faucet being provided with a discharge-nozzle with which a hose may be connected, substantially as shown and described.

3. A device of the character herein described, comprising a tubular casing 5, provided at one end with an angular spout or tubular extension 6, and at the opposite end with an enlarged annular head 9 whereby a shoulder 10 is formed, a packing-ring 11, a disk or plate 12 provided with a tubular extension 21, and a tube 22, and a screw-threaded head 13 which is adapted to be screwed into said annular head, said head 13 being provided with a discharge-faucet, substantially as shown and described.

In testimony that I claim the foregoing as my invention I have signed my name, in presence of the subscribing witnesses, this 11th day of July, 1898.

FRANZ DANIEL EMIL MANZEL.

Witnesses:

F. A. STEWART,

A. C. MCLOUGHLIN.