PCT WORLD INTELLECTUAL PROPERTY ORGANIZATION
International Bureau

INTERNATIONAL APPLICATION PUBLISHED UNDER THE PATENT COOPERATION TREATY (PCT)

(51) International Patent Classification 6 : C02F 1/28, 1/42, 3/00	A1	(11) International Publication Number: **WO 99/32408**
		(43) International Publication Date: 1 July 1999 (01.07.99)

(21) International Application Number: PCT/US97/23935

(22) International Filing Date: 19 December 1997 (19.12.97)

(71) Applicant *(for all designated States except US)*: WESTINGHOUSE SAVANNAH RIVER COMPANY [US/US]; Building 730–B, P.O. Box 616, Aiken, SC 29803 (US).

(72) Inventors; and

(75) Inventors/Applicants *(for US only)*: PHIFER, Mark, A. [US/US]; 340 Saint Julian Place, North Augusta, SC 29860 (US). NICHOLS, Ralph, L. [US/US]; 812 Plantation Pointe Drive, North Augusta, SC 29841 (US).

(74) Agents: HARDAWAY, John, B., III et al.; Hardaway Law Firm, P.A., Federal Station, P.O. Box 10107, Greenville, SC 29603–0107 (US).

(81) Designated States: AL, AM, AT, AU, AZ, BA, BB, BG, BR, BY, CA, CH, CN, CU, CZ, DE, DK, EE, ES, FI, GB, GE, GH, GM, GW, HU, ID, IL, IS, JP, KE, KG, KP, KR, KZ, LC, LK, LR, LS, LT, LU, LV, MD, MG, MK, MN, MW, MX, NO, NZ, PL, PT, RO, RU, SD, SE, SG, SI, SK, SL, TJ, TM, TR, TT, UA, UG, US, UZ, VN, YU, ZW, ARIPO patent (GH, GM, KE, LS, MW, SD, SZ, UG, ZW), Eurasian patent (AM, AZ, BY, KG, KZ, MD, RU, TJ, TM), European patent (AT, BE, CH, DE, DK, ES, FI, FR, GB, GR, IE, IT, LU, MC, NL, PT, SE), OAPI patent (BF, BJ, CF, CG, CI, CM, GA, GN, ML, MR, NE, SN, TD, TG).

Published
With international search report.

(54) Title: APPARATUS AND PROCESS FOR WATER TREATMENT

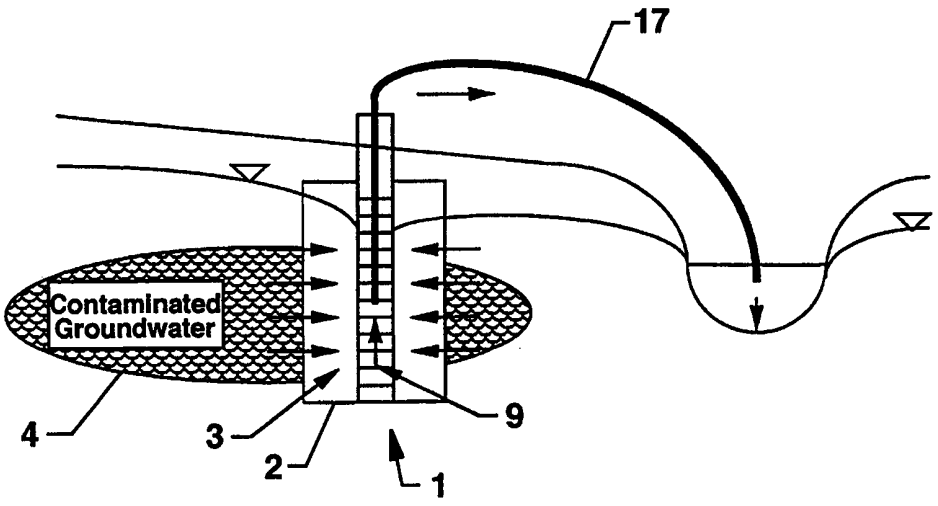

(57) Abstract

An apparatus is disclosed utilizing permeable treatment media (3) for treatment of contamined water, along with a method for enhanced passive flow of contamined water through the treatment media. The apparatus includes a treatment cell (1) including a permeable structure that encloses the treatment media, the treatment cell may be located inside a water collection well (13), exterior to a water collection well, or placed in situ within the pathway of contaminated groundwater. The apparatus and process for passive flow and groundwater treatment utilizes a permeable treatment media made up of granular metal, bimetallics, granular cast iron, activated carbon, cation exchange resins, and/or additional treatment materials. An enclosing container (2) may have an outer permeable wall (5) for passive flow of water into the container and through the enclosed treatment media to an effluent point.

FOR THE PURPOSES OF INFORMATION ONLY

Codes used to identify States party to the PCT on the front pages of pamphlets publishing international applications under the PCT.

AL	Albania	**ES**	Spain	**LS**	Lesotho	**SI**	Slovenia
AM	Armenia	**FI**	Finland	**LT**	Lithuania	**SK**	Slovakia
AT	Austria	**FR**	France	**LU**	Luxembourg	**SN**	Senegal
AU	Australia	**GA**	Gabon	**LV**	Latvia	**SZ**	Swaziland
AZ	Azerbaijan	**GB**	United Kingdom	**MC**	Monaco	**TD**	Chad
BA	Bosnia and Herzegovina	**GE**	Georgia	**MD**	Republic of Moldova	**TG**	Togo
BB	Barbados	**GH**	Ghana	**MG**	Madagascar	**TJ**	Tajikistan
BE	Belgium	**GN**	Guinea	**MK**	The former Yugoslav Republic of Macedonia	**TM**	Turkmenistan
BF	Burkina Faso	**GR**	Greece			**TR**	Turkey
BG	Bulgaria	**HU**	Hungary	**ML**	Mali	**TT**	Trinidad and Tobago
BJ	Benin	**IE**	Ireland	**MN**	Mongolia	**UA**	Ukraine
BR	Brazil	**IL**	Israel	**MR**	Mauritania	**UG**	Uganda
BY	Belarus	**IS**	Iceland	**MW**	Malawi	**US**	United States of America
CA	Canada	**IT**	Italy	**MX**	Mexico	**UZ**	Uzbekistan
CF	Central African Republic	**JP**	Japan	**NE**	Niger	**VN**	Viet Nam
CG	Congo	**KE**	Kenya	**NL**	Netherlands	**YU**	Yugoslavia
CH	Switzerland	**KG**	Kyrgyzstan	**NO**	Norway	**ZW**	Zimbabwe
CI	Côte d'Ivoire	**KP**	Democratic People's Republic of Korea	**NZ**	New Zealand		
CM	Cameroon			**PL**	Poland		
CN	China	**KR**	Republic of Korea	**PT**	Portugal		
CU	Cuba	**KZ**	Kazakstan	**RO**	Romania		
CZ	Czech Republic	**LC**	Saint Lucia	**RU**	Russian Federation		
DE	Germany	**LI**	Liechtenstein	**SD**	Sudan		
DK	Denmark	**LK**	Sri Lanka	**SE**	Sweden		
EE	Estonia	**LR**	Liberia	**SG**	Singapore		

APPARATUS AND PROCESS FOR WATER TREATMENT

Disclosure

The United States Government has rights in this invention pursuant to Contract No. DE-AC09-96-SR18500 between the U.S. Department of Energy and Westinghouse Savannah River Company.

Brief Summary of the Invention

The invention relates generally to technology for treatment of water, and more particularly to remediation of groundwater utilizing a passive, in situ, or ex situ treatment method for the remediation of contaminants in groundwater.

Background of Invention

A wide variety of technologies are utilized to remediate contaminated groundwater, including the method of pumping groundwater to the surface and treating groundwater in reactors, or bioremediation with microbial populations in situ, or ex situ, or injection of catalysts into the ground to encourage natural remediation of contaminants in groundwater.

In Horn, U.S. Patent No. 5,635,394, a bioreactor is disclosed which serves as a biological air filter for purification of air streams. In Fernandao, et al., U.S. Patents No. 5,616,253 and No. 5,611,936, various methods are disclosed for utilizing a palladized iron bimetallic system for the dechlorination of chlorinated organic compounds in contaminated soils and various effluents. In Howson, et al., U.S. Patent No. 5,543,059, a method is disclosed for remediation of contaminated solutions by a tiered metal wall or column having reducing metal particles, to dehalogenate hydrocarbon contaminants. In Sivavec, U.S. Patent No. 5,447,639, a method is disclosed for remediation of aqueous solutions of chlorinated aliphatic hydrocarbons utilizing in situ or ex situ reactions with ferrous sulfide. In Thornton, U.S. Patent No. 5,380,441, a method is disclosed for the addition of metallic iron particles to an aqueous solution containing hexavalent chromium to precipitate and reduce the hexavalent chromium to trivalent chromium. In Gillham, U.S. Patent No. 5,266,213, a method is disclosed for remediation of aqueous halogenated organic compounds utilizing a metal in a trench to produce reducing conditions.

The above described and other methods of remediation have shortcomings which require the installation of an in situ permanent or semi-permanent reactor apparatus to contact contaminated groundwater. A commonly used method of remediation requires that groundwater is pumped to the surface into reactors containing reacting agents for treatment. Continuous pumping of groundwater is costly and inefficient, and in situ placement of remediation mechanisms can be obstructed underground by clogging and biological fouling of filters. Thus there exists room for improvement within the art.

Summary of the Invention

It is an object of this invention to provide an apparatus and process directed towards the treatment of water.

It is a further object of this invention to provide an apparatus that operates in situ and utilizes passively induced movement of groundwater through the apparatus.

It is an additional object of this invention to provide an apparatus that contains a permeable treatment media that provides for the passive remediation of contamination in groundwater.

It is a further and more particular object of this invention to provide a method for inserting and maintaining an in situ treatment media for the passive remediation of contamination in groundwater.

It is yet a further and more particular object of this invention to provide an in situ or ex situ passive system for treatment and/or filtering of groundwater, without the need for mechanical pumps.

It is yet an additional and more particular object of this invention to provide in situ treatment of groundwater within a defined area or container underground, with removal of treated water by pumping, siphoning, or passive flow.

These and other objects of the invention are accomplished by
an apparatus and a process for treating contaminated water including: providing a treatment media within a defined treatment zone; providing an enclosure for the treatment

media; providing a flow of contaminated water through the permeable treatment media, by locating the treatment media between a first and a second location, the two locations being in hydraulic communication; establishing a lower pressure head at the second location; maintaining a pressure differential between the first location and second location; with the pressure differential removing treated groundwater from the permeable treatment media by siphon or natural passive flow.

Thus, the objects of the invention are accomplished by the apparatus containing permeable treatment media, and a process for treatment of contaminated water as described herein.

Brief Description of the Drawings

Various other features and advantages will become apparent from a reading of the following detailed description, given with reference to the various figures of drawing, in which:

FIGURE 1 is an overall schematic of one embodiment of the present invention having treatment cells below ground and surrounding a passive water collection well;

FIGURE 2 is a schematic of another embodiment of the present invention having treatment cells below ground and surrounding a passive water discharge well of the present invention;

FIGURES 3-4 are cross-sectional side views of containers of treatment media in accordance with the present invention; and

FIGURES 5-13 are cross-sectional side views which illustrate additional variations of the passively induced flow treatment cells of the present invention.

Detailed Description of the Preferred Embodiments

In accordance with this invention, it has been found that an approved process and apparatus can be provided to decontaminate groundwater or to treat water with inadequate water quality. The invention is capable of passively moving water through a permeable treatment media, either below ground (in situ), or above ground (ex situ). The invention utilizes natural hydraulic head differences between two points to

passively induce water flow at a selected location through a defined treatment zone containing permeable treatment media for improving water quality by treatment of contaminated groundwater or contaminated surface water.

In accordance with Figures 1-2, the present invention is an apparatus comprising a treatment cell **1** containing a porous mixture of treatment media **3**, through which water **4** flows for treatment by the treatment media **3**. The effluent of cleansed water may be removed from an in situ container **2** of treatment media by siphon **17**, active pumping, or passive natural flow.

As shown in Figures 3-4, the treatment cell may include a container **2** with permeable intake walls **5**, effluent openings **7**, and a central conduit **9** surrounded by permeable treatment media **3**. The central conduit **9** has walls **10** consisting of permeable screens or filters which allow water to move through the conduit walls **10** into the conduit **9** for exiting from the container at effluent openings **7**. The container **2** has a stackable configuration (Fig. 4), with sealable joints **11** which interconnect with sealable joints of another container **2** to form two or more treatment cells.

The treatment cell **1** may be placed vertically into a well casing **13** (see Fig. 5-6), or placed in a defined zone of treatment media **3**, downgradient from the groundwater collection well **13**, with the treatment cell **1** connected to the collection well **13** by a siphon **17** (Fig. 7). The permeable treatment media **3** and enclosing container **2** may be positioned inside a well casing **13** (see Fig. 5, 6, 10, and 11), or positioned around the water intake or outflow screens of the collection well (see Fig. 1, 2, and 9), or positioned external to a groundwater intake point (see Fig. 7, 8, and 13). For the present invention, groundwater is defined as water located below the ground surface, or water collected below the ground surface and discharged back underground or to the surface. Also for the present invention, the container may be a container separate than the groundwater well casing **13**, or a borehole may serve as a containment vessel for the treatment media **3**, without an enclosing container **2** or a well casing **13**.

The treatment cell **1** enclosing the permeable treatment media **3** may be placed within the pathway of flow of contaminated water, but above ground and external (see Fig. 7) to a well casing **13**. The passively induced treatment comprises a combination of permeable treatment media located in the pathway of water **4** to be treated, and a process to establish an enhanced passive flow of the contaminated groundwater through the treatment zone. The treatment zone may be defined by a trench of treatment media, by an augered hole of treatment media, a well structure confining the treatment media, or a container of treatment media. The treatment zone or structure is connected with passively induced flow of water to provide an efficient process to remediate contaminated groundwater or water with inadequate water quality without the need for active pumping.

The passively induced treatment system provides enhancement of the passive movement of contaminated groundwater flow through a defined treatment zone of permeable treatment media at an accelerated rate. The accelerated rate of groundwater flow is induced by utilizing the natural or man-made (i.e., dam, trench, or groundwater withdrawals) hydraulic head differences between two points. A first location would have groundwater at a higher hydraulic gradient, also termed a greater pressure head, and a second discharge location would receive water at a lower pressure head. The water collected at the first location is hydraulicly connected by siphons **17** or other conduits to the second location. The accelerated flow rate can be produced through the use of siphons **17** connecting two groundwater wells, or in situ channels of contaminated groundwater flowing due to pressure differences between two points of natural or man-made head differences. The up gradient inlet or uptake collection well is located within an aquifer containing water to be cleaned, and the down gradient discharge point may be to the subsurface by discharge in an outlet well, or to the ground surface, or to a surface water body by a siphon **17** conduit or channeled water flow. The permeable treatment media can be applied at any point in the pathway of

contaminated water flow along the passively induced, variable flow pattern, and can be applied in situ (underground), or ex situ (aboveground), and can be configured to be either permanent, removable, and/or rechargeable.

The treatment cell **1** in Figures 3 and 4, includes permeable walls **5** of the container **2**, the permeable walls **5** composed of an outer porous screen (not shown), or porous geonet **8** or geotextile material, or other porous material such as screens of metal or plastic (not shown). Other porous material for the construction of permeable walls or conduits includes: artificial gravel packs, washed rounded rock, permeable native soils, sand, or combinations of the above with layers of geotextiles or geonets. The permeable walls **5** allow free movement of water from outside the container **2** to the interior (see Figure 1 and 4), or from the interior to the outside of the container **2** (see Figure 2 and 6). The geonet **8** layer is composed of a geotextile bonded to both sides of the layer to restrict the movement of soil particles into the container, and to limit the loss of treatment media **3**, such as metal filings or granular cast iron, and activated carbon, from inside the container. The geonet **8** also has a high planar transmissivity. This property allows the geonet **8**, which is vertically oriented, to provide a more even distribution of head pressure and flow with depth over the length of the surface of the container or collection well. A more even distribution of head pressure and flow allows a more even flow of contaminated water through the sides of the container **2** inside a collection well casing **13**, providing a more even distribution of contaminants over the surface area of the treatment media **3** within the container. The flow of water into, or out of the permeable treatment media **3**, may be radially inward through the interior void area filled with porous media and a central conduit.

An installed example of one configuration of the treatment cell **1** utilizing a container **2** is shown in Figure 9. The treatment cell **1** may be any diameter, ranging from less than eight inches diameter, up to more than an eight foot diameter treatment cell **1**. The outer permeable walls **5** of the

treatment cell **1**, may be composed of an outer porous screen (not shown), a porous geonet **8** of geotextile material, a permeable fibrous material (not shown), or other porous material such as screens, gravel packs, or similar permeable structures (not shown). The walls **5** serve as filters of groundwater passing through the treatment cell **1** to reduce sediment moving through the interior treatment media **3**. The exterior walls **5** are not necessarily a requirement of the treatment cell **1**, as shown in Figure 12, where the treatment media **3** is placed into a bore hole without a casing **13**, with the bore hole serving as a pathway of lesser resistance to channel water to be treated **4** through the treatment media **3** without exterior walls **5** required.

As shown in Figures 1-5, and 9, a central conduit **9** may extend the length of the treatment cell **1**, with the porous walls or porous intake and exit of the treatment container **2** allowing movement of water into, and out of, the central conduit. The void area between the walls of the interior central conduit **9**, and the walls **5** of the enclosing container such as a well casing **13** or the walls of a borehole, is filled with any conventional treatment media **3** capable of removing or destroying contaminants. Typical components of the treatment media **3** may include one or more of the following, but not limited to: bimetallics, granular metal, granular cast iron, iron foam, blast furnace slag, multiple combination or metals, granular steel, dolomite, sulfur, pyrite, phosphate rock, peat, concrete, fly ash, activated carbon, ion exchange resins, limestone, zeolites, and/or biological treatment media such as microorganisms. The permeable treatment media **3** can be placed at any point within the passively induced contaminated groundwater **4** flow. The permeable treatment media **3** can be placed within the water flow pathway in situ, or can be attached to a siphon **17** configuration above ground, at any point before the water discharge point.

Siphon Induced Flow

The installation and use of a treatment cell **1** utilizing siphons **17** as shown in Figures 1-9, is described in more detail in Phifer, "Preliminary Engineering Report,"

Westinghouse Savannah River Company report dated June 10, 1997, herein incorporated by reference. The treatment media relies on treatment of groundwater contaminated with chlorinated hydrocarbons by utilizing metal catalysts to remove chlorines from the chlorinated hydrocarbon compounds. The exact pathway for the reductive dechlorination process for chlorinated hydrocarbon contaminants in groundwater has not yet been determined for granular cast iron treatment media. For discussion of the use of granular cast iron for the reductive dechlorination of chlorinated hydrocarbons, see Gillham, U.S. Patent No. 5,266,213, herein incorporated by reference.

The treatment of the contaminated groundwater within the treatment media **3** occurs due to surface activated reactions, which may require the adsorption of the water contaminants onto specific active surface sites on the granular cast iron, bimetallics, or other metal within the treatment media **3**. During the reaction the iron is oxidized, water dissociates to form hydrogen ions and gas, and the chlorine on the chlorinated hydrocarbon compounds, is replaced with hydrogen. The dechlorination process occurs within the treatment media **3**, resulting in dechlorinated compounds and water flowing out the exit of the treatment media **3**.

The passively induced flow treatment cell **1** systems utilizing siphons to induce passive, variable water flow through in situ, or ex situ, treatment systems requires no external power of operation. The movement of contaminated water through the treatment cells is passive and accelerated over normal groundwater movement by the placement of an upgradient water intake point having a higher water pressure head, with a water conductive pathway leading from the intake point, to a downgradient discharge point having a lower water pressure head. The water flows due to natural hydraulic head differences between the point of water intake and the point of water discharge, with passively induced, variable flow through the conduits and through the permeable treatment media placed within the water flow pathway.

Therefore very little operating and maintenance costs are associated with these systems. Operating costs associated with such systems would be primarily in the form of monitoring and change out of treatment media containers as required over numerous years of operation.

For the treatment of contaminated groundwater using the process of induced passive flow of water by siphon or pressure induced flow through a permeable treatment cell, an important element of treatment is to provide adequate contact time for the contaminated groundwater to passively flow through the defined treatment zone containing permeable treatment media. A longer residence time of the contaminated water within the treatment cell allows for maximizing of the contact time for the water passively flowing through the permeable treatment media.

Pressure Induced Flow

An example of pressure induced passive flow through a treatment cell **1** is depicted in Figures 10-13. A large diameter vertical well (Fig. 10 and 11) is installed by conventional well drilling or augering techniques. Each configuration contains a flow-through, permeable treatment media **3** positioned between an upper and lower screened zone of a water collection well casing **13**. Contaminated groundwater flow is passively induced through the treatment container due to the pressure head differential between the locations of the upper and lower screened zones of the well casing **13**. In Fig. 12, a similar configuration is shown where a borehole without a casing is utilized to contain the treatment media **3**, where the borehole serves as an outer permeable container wall. Groundwater flows into the screen with the higher head pressure, through the treatment media, and out the screened area of the container with the lower head pressure. This can be done within a single aquifer or between aquifers.

Figures 10-13 present an alternative treatment cell **1** configuration, as described in more detail in Phifer, "Expert Panel Report, MWMF Groundwater Southwest Plume, GeoFlow Cell Remediation Option" (Westinghouse Savannah River Company report dated May 30, 1997), herein incorporated by reference.

Figure 10 depicts a well casing **13** containing a removable, flow-through, permeable treatment media **3** positioned between an upper **15** and lower **16** screened zone. The upper and lower screen zones could be located in the water table aquifer and lower aquifers, respectively. The treatment of the water from an aquifer would be possible to concentrations of contaminants below regulatory compliance concentration levels, without pumping of the water to the surface for treatment. Any tritium contamination in the collected water would be managed by providing a longer flow path and additional time for radioactive decay of any tritium contamination. The treatment zone can consist of one, or a plurality of containers **2** of permeable treatment media **3**, installed in numerous configurations (see Figures 1-13). Each treatment cell of the configuration of Figures 10 and 11 may consist of approximately two inches or larger diameter vertical wells installed by conventional well drilling techniques. Each well casing **13** would have an upper screened zone **15** in the contaminated water **4** aquifer and a lower screened zone **16** in the clean water aquifer below an aquitard or confining strata **19**. A removable, flow-through, container **2** of permeable treatment media **3**, containing granular media such as cast iron or other treatment media, would be positioned between the two screened zones. The contaminated groundwater **4** would be passively induced to flow through the treatment media **3**, and may exit the well casing **13** at the lower screened zone **16**. Use of a treatment cell **1** without siphons **17** is shown in Figures 10-13, and is described in more detail in Phifer, "Expert Panel Report, MWMF Groundwater Southwest Plume, GeoFlow Cell Remediation Option," Westinghouse Savannah River Company report dated May 30, 1997, herein incorporated by reference.

Summary of Configurations

As seen in Fig. 1, a variation of the present invention provides for the treatment cell to surround the water collection well, with contaminated water flowing into and through the treatment cell, with passive induced, variable flow into the collection well, and the treated water siphoned

to a discharge point of lower hydraulic head pressure than the collection point.

As seen in Fig. 2, the invention allows for the treatment media and enclosing container to be placed at the discharge point for the water. The pathway for the passively induced, variable water flow is from an upgradient collection well, siphoned to the downgradient container of porous treatment media, through the treatment media, and exiting from the permeable walls of the treatment media container.

Other variations of the treatment cell, as seen in Fig. 5, place the cell inside a collection well. A removable treatment container is inserted within the water collection well. The passive flow is induced because the zone of intake for the contaminated water in the collection well is upgradient of the lower hydraulic head of the water discharge point. The contaminated water passively flows through the porous media, into the lower region of the collection well, and up through a central conduit to a siphon **17** for transfer to the discharge point.

As seen in Fig. 6, the water intake point may be located at an upgradient water collection well with a removable downgradient well containing the removable treatment container. The contaminated water passively flows from the intake point of higher hydraulic head, to and through the treatment cell inside a discharge well, and out of the central conduit of the container to a discharge zone of the discharge well that is at a lower hydraulic head.

As seen in Fig. 7, the water collection well may be placed upgradient, with passively induced flow to the aboveground, rechargeable treatment cell. The treatment cell is located at the water discharge point at a lower hydraulic head.

Another variation of the treatment cell, as seen in Fig. 8, locates the treatment cell in situ, and within the natural flow pathway of contaminated groundwater, with a downgradient water recovery well that has a siphon **17** moving treated water to a discharge point of lower hydraulic head.

A further variation of the treatment cell, as seen in Fig. 9, locates the treatment cell around the central casing for collection of treated water. The contaminated water is passively induced to flow laterally into and through the treatment cell, with water siphoned out of the central casing, for discharge at a point of lower hydraulic head.

An additional variation of the treatment cell, as seen in Fig. 10, is a removable treatment cell placed inside a water collection well. The treatment container is placed between the water collection zone and discharge zone of the well, with treated water passively flowing out the lower end of the well at a point of lower hydraulic head.

As seen in Fig. 11, the treatment media may be placed in a well between the upper screened intake zone **15**, and the lower discharge zone **16**. The passively induced flow is from the upper zone **15**, through the permeable treatment media, and out of the lower discharge zone **16** having lower hydraulic head.

As seen in Figure 12, the treatment media may be permanently installed treatment cell placed into a borehole, located between the upper water collection zone and the lower discharge zone. The passively induced flow of water is from the upper zone, through the permeable treatment media, and out of the discharge zone of lower hydraulic head.

As seen in Figure 13, the treatment media may be located in situ between the upgradient interceptor trench, and the downgradient discharge point. The passively induced flow of water is from the upper water collection trench, through the treatment media, and to the discharge trench or well of lower hydraulic head.

Although the present invention has been described in considerable detail with reference to certain preferred versions thereof, other versions are possible.

Additional configurations than those shown in Figures 1-13 may be assembled, with single, double, or multiple treatment containers in series or in parallel, and connected by central conduits, piping, and siphon pathways to downgradient water discharge points.

Many variations will undoubtedly become apparent to one skilled in the art upon a reading of the above specification with reference to the figures. As the foregoing description is exemplary in nature, the spirit and scope of the appended claims should not be limited to the description of the preferred versions contained herein.

Claims

What is claimed is:

1. A process of treating a contaminated groundwater comprising:

providing a flow of groundwater having a contaminant within said water, said flow maintained by a pressure differential between a first location and a second location, said first and second location being in hydraulic communication;

directing said flow of groundwater through a treatment media, said treatment media treating said contaminant, thereby producing a supply of treated groundwater;

maintaining said pressure differential, said pressure differential removing said treated groundwater from said treatment media.

2. The process of claim 1, wherein the step of providing a flow of groundwater further comprises establishing a water intake point at said first location having a greater water pressure head than the pressure head at a water discharge point at said second location.

3. The process of claim 2, wherein the step of providing a flow of groundwater further comprises a siphon connected between the first location and the second location, the siphon providing a passive flow of groundwater to the second location.

4. The process of claim 1, wherein the step of directing said flow of groundwater through said treatment media, further comprises supplying said treatment media selected from the group consisting of granular metal, bimetallics, granular cast iron, iron foam, blast furnace slag, activated carbon, ion exchange resin, phosphate rock, limestone, zeolites, pyrite, sulfur, fly ash, dolomite, and biological treating components.

5. The process of claim 1, wherein the step of directing said flow through the treatment media, further comprises providing a permeable outer enclosure of the treatment media.

6. The process of claim 5, wherein the step of providing the permeable outer enclosure further provides a substantially even distribution of hydraulic pressure over the length of the permeable membrane.

7. The process of claim 1, wherein the step of maintaining said pressure differential further comprises a variable rate of water flow through the treatment media.

8. An apparatus for treatment of contaminated water comprising:

a housing having an inlet and an outlet;

a treatment media carried within said housing;

a first location of water pressure head in hydraulic communication with said inlet; and

a second location in hydraulic communication with said outlet, the second location having lower water pressure head than the first location;

a flow of the contaminated water in communication with the treatment media said flow moving in a direction of said first location;

wherein said flow of the contaminated water is from the first location, to the housing inlet, through the treatment media, with a supply of treated water removed from the outlet of the housing to the second location of lesser water pressure head.

9. The apparatus of claim 8, wherein the treatment media further comprises a mixture of components selected from the group consisting essentially of granular metal, bimetallics, granular cast iron, iron foam, blast furnace slag, activated carbon, ion exchange resin, phosphate rock, limestone, zeolites, pyrite, sulfur, fly ash, dolomite, and biological treatment components.

10. The apparatus of claim 8, wherein the inlet further comprises an exterior surface of an outer permeable membrane defining said housing.

11. The apparatus of claim 8, wherein the inlet further comprises a rigid screen providing a substantially even distribution of water pressure head over the length of the inlet.

12. A process for the treatment of contaminants in groundwater comprising the steps of:

providing a treatment media;

enclosing the treatment media inside an enclosure;

providing a enclosure having an inlet and an outlet;

providing a first location in hydraulic communication with the inlet;

providing a second location in hydraulic communication with the outlet;

directing a flow of contaminants in water through the treatment media; and

maintaining the flow of water from the first location to the second location;

wherein the contaminants are treated by the treatment media and treated groundwater is provided to the second location, the second location at a lower water pressure head than the first location.

13. The process of claim 12, wherein the step of providing the treatment media comprises supplying treatment media of granular metal, bimetallics, granular cast iron, iron foam, blast furnace slag, activated carbon, cation exchange resin, phosphate rock, limestone, zeolites, pyrite, sulfur, fly ash, dolomite, or biological treating components.

14. The process of claim 12, wherein the step of maintaining the flow of water, further comprises establishing a water collection point at the first location that is at a higher water pressure head than the second location.

15. The process of claim 12, wherein the step of maintaining the flow of water, further comprises establishing a water discharge point that is at a lower water pressure than the treatment media inside the enclosure.

16. An apparatus for treatment of contaminated water comprising:

a treatment media;

a structure enclosing the treatment media;

a supply of contaminated water in communication with the treatment media, said supply moving along a pressure gradient established between a first pressure head and a

second pressure head;

an inlet at the first pressure head; and

an outlet at the second pressure head;

wherein a passive flow of contaminated water is through the treatment media, the passive flow being from the first pressure head to the second pressure head.

17. The apparatus of claim 16, wherein the structure enclosing the treatment media further comprises an intake in communication with the inlet at the first pressure head, and an exit in communication with the outlet at the second pressure head.

18. The apparatus of claim 16, wherein the treatment media comprises a mixture of granular metal, bimetallics, granular cast iron, iron foam, blast furnace slag, activated carbon, ion exchange resin, phosphate rock, limestone, zeolites, pyrite, sulfur, fly ash, dolomite, or biological treatment components.

19. The apparatus of claim 16, wherein the passive flow of contaminated water further comprises a siphon maintaining the passive flow of water from the structure of treatment media to the second pressure head.

20. The apparatus of claim 16, wherein the passive flow of contaminated water further comprises a siphon maintaining the passive flow of water from the first pressure head to the structure of treatment media.

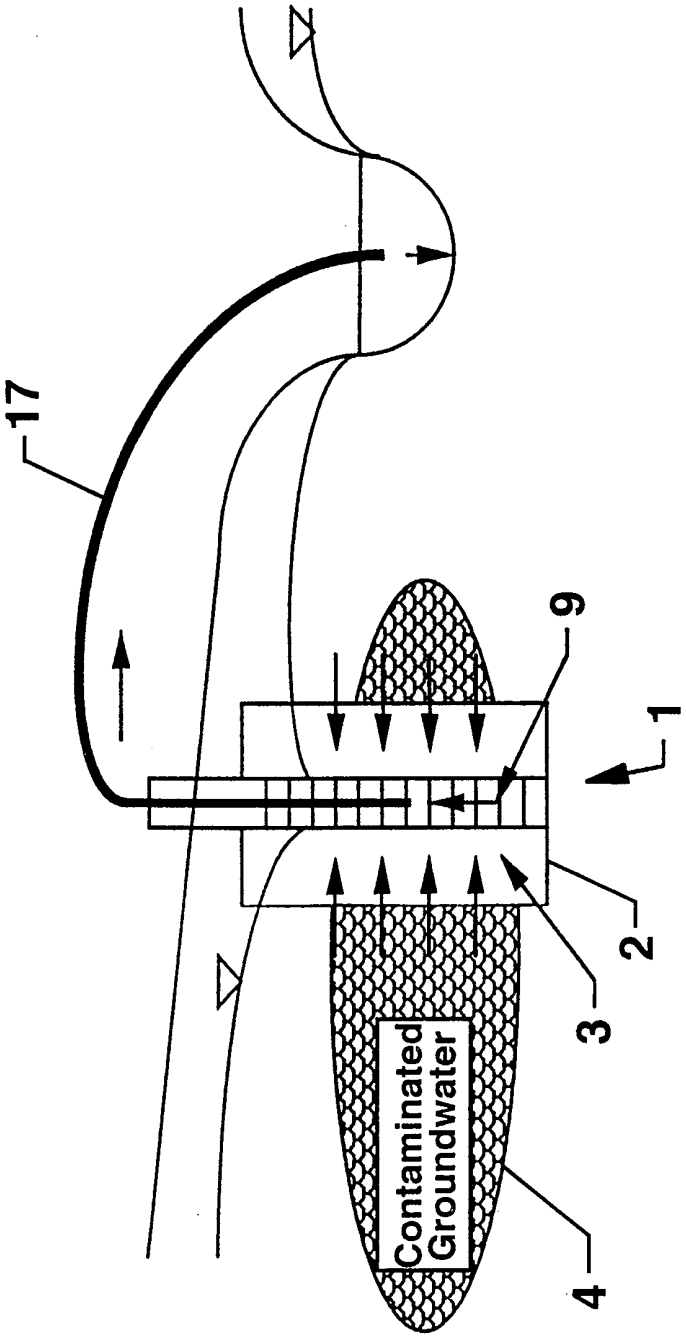

FIG. 1

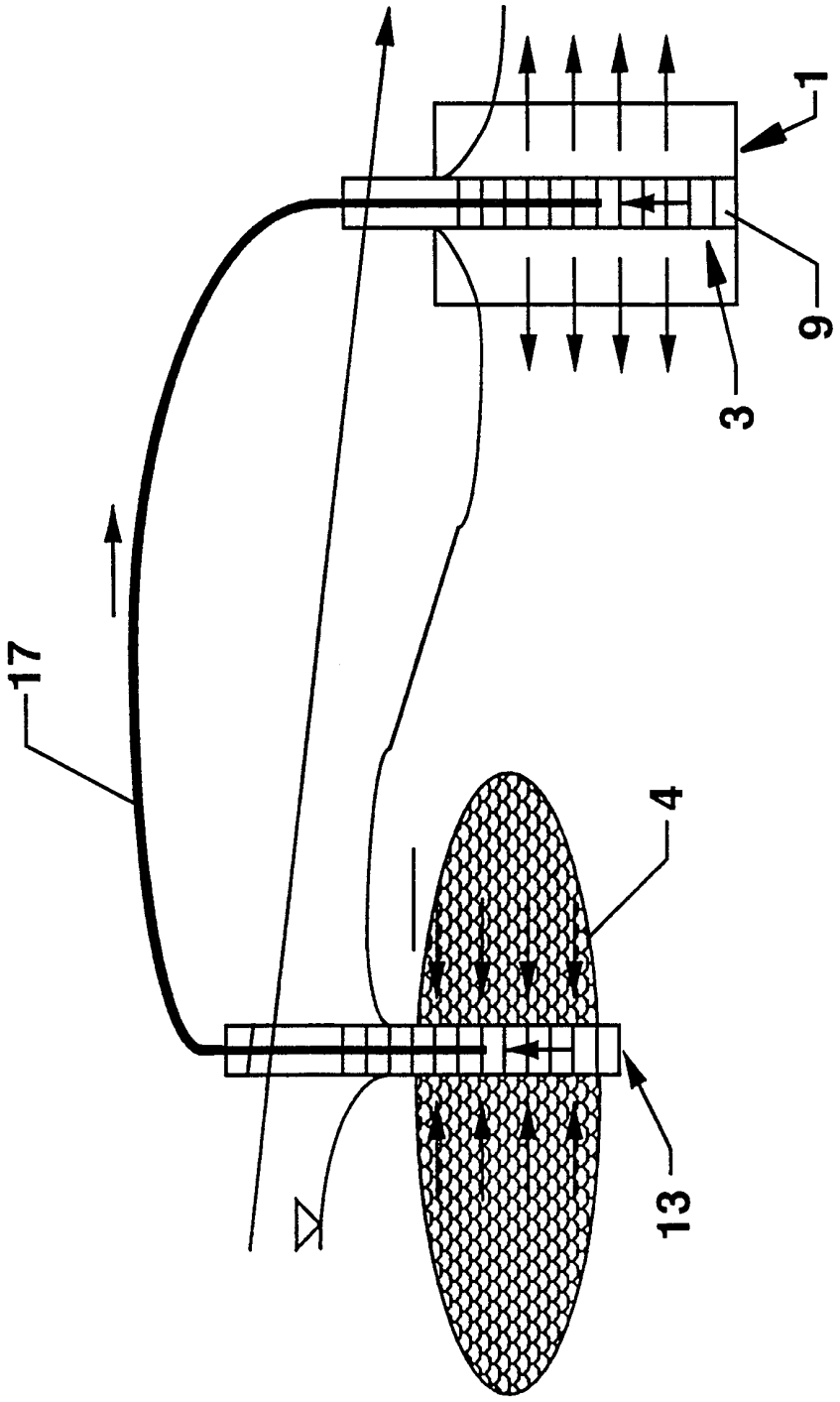

FIG. 2

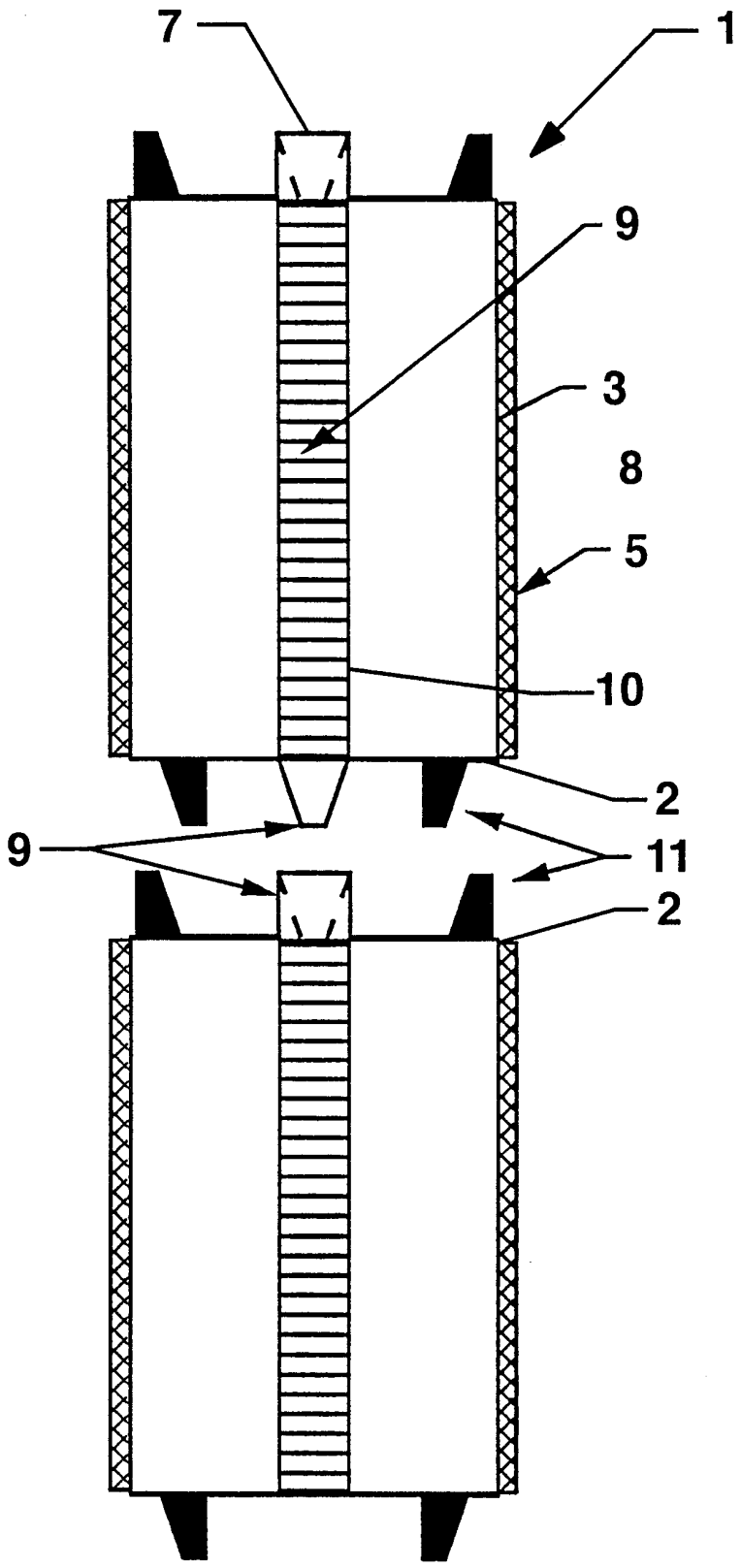

FIG. 3

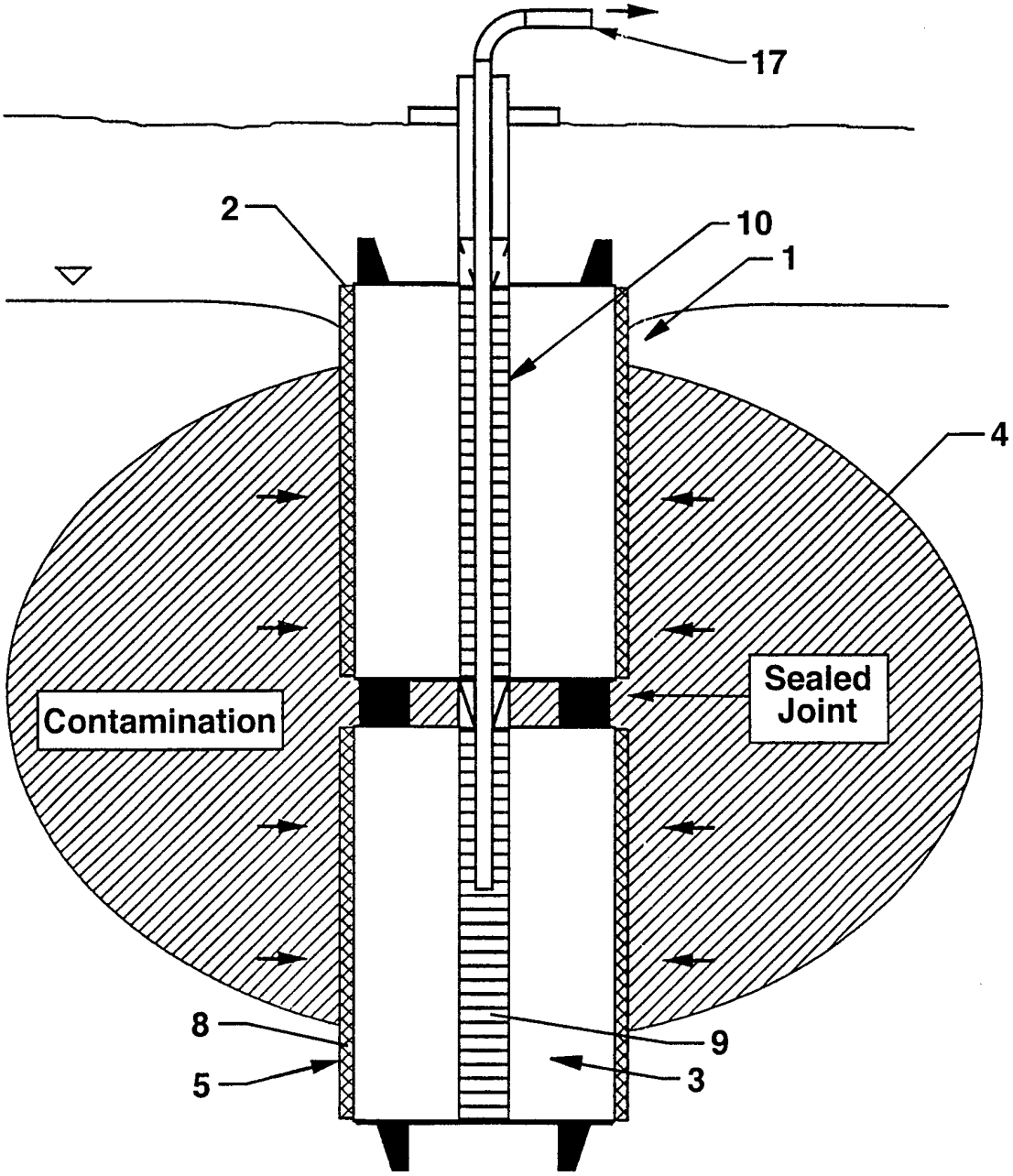

FIG. 4

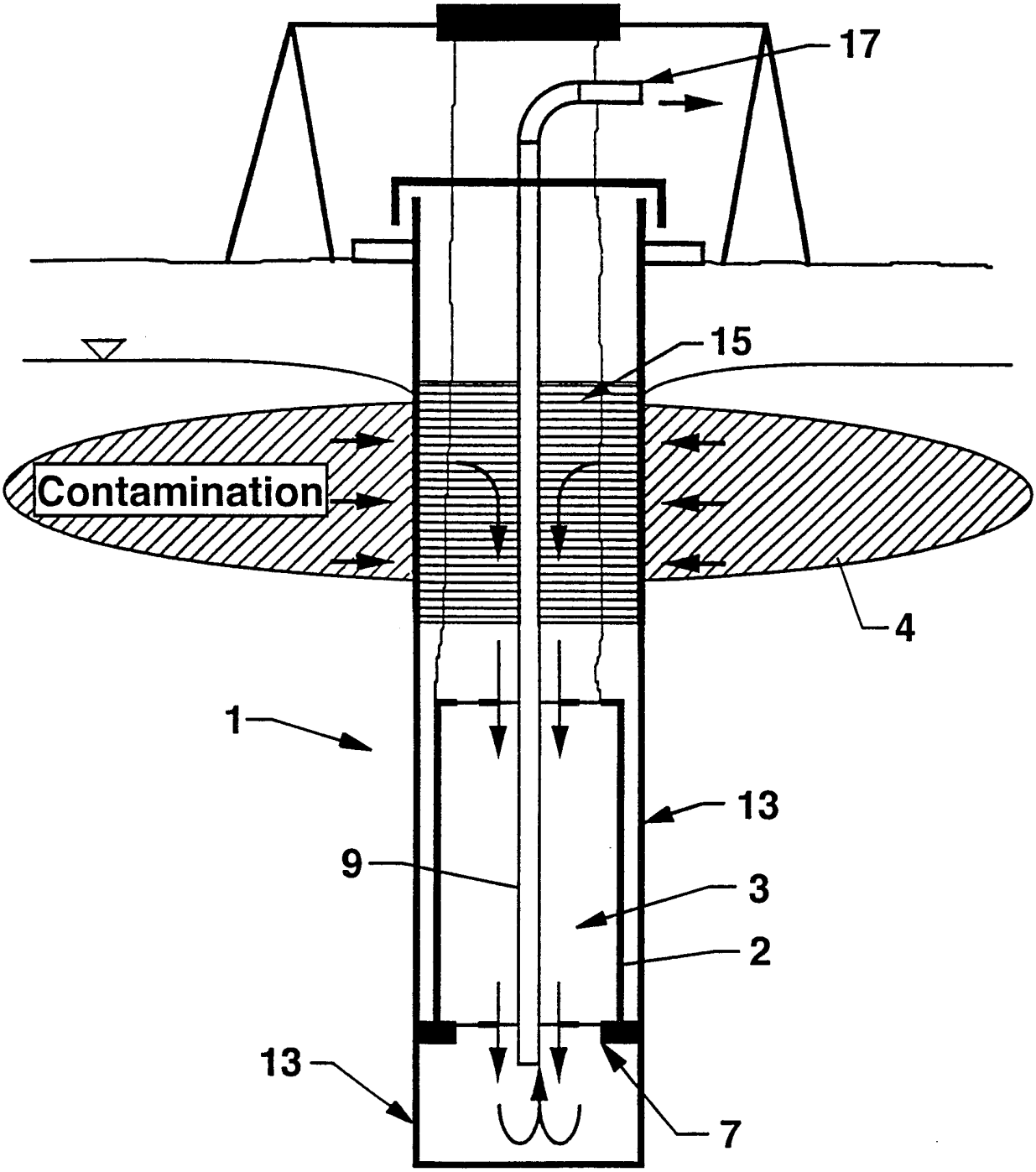

FIG. 5

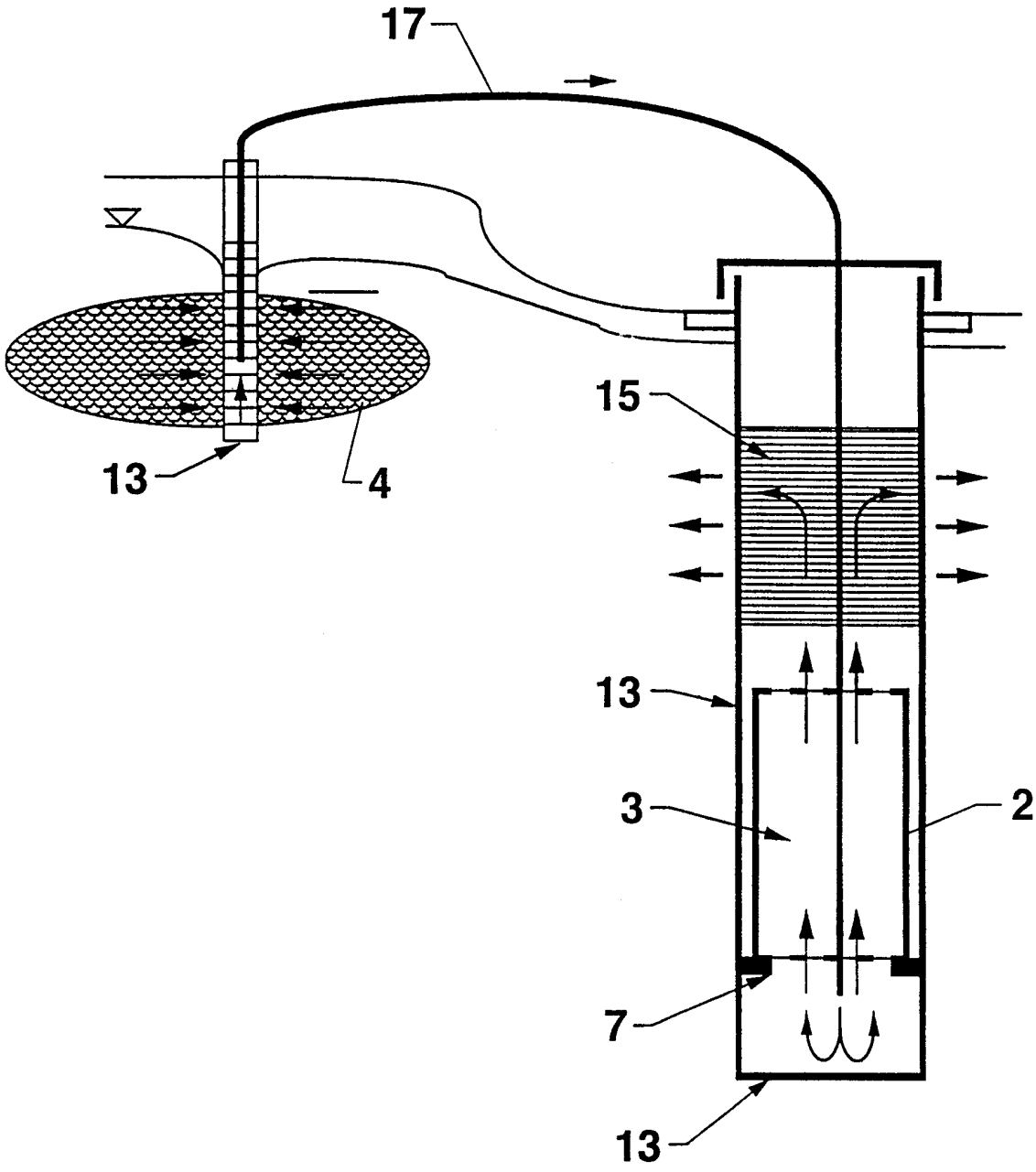

FIG. 6

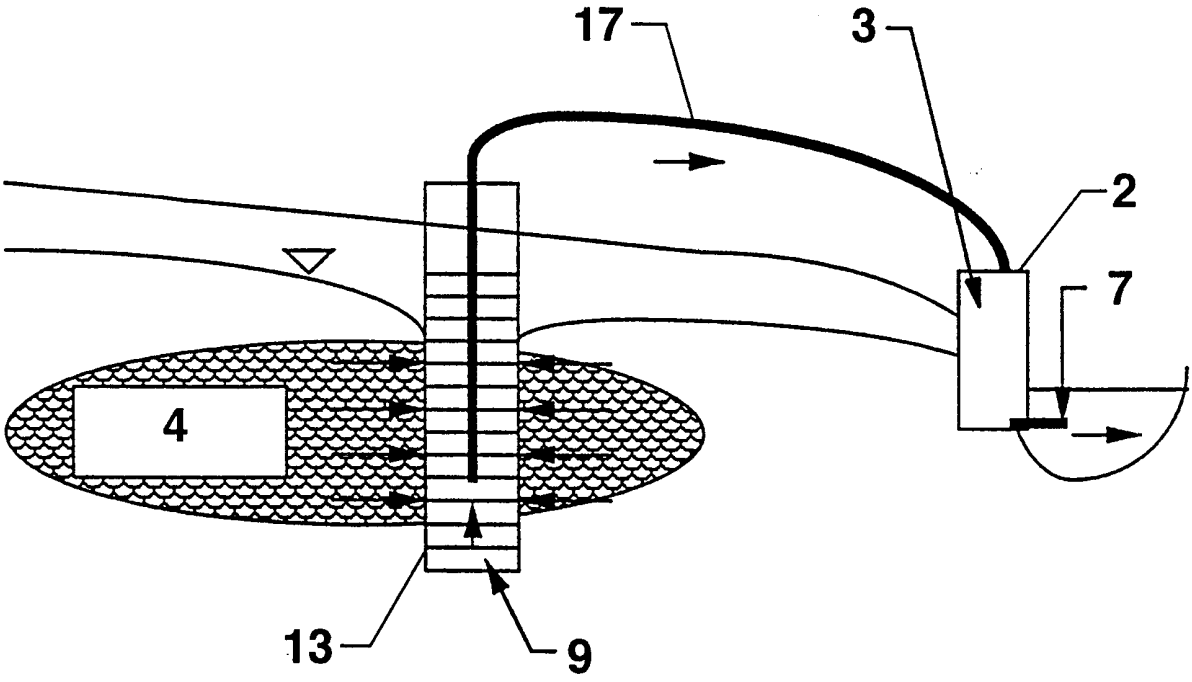

FIG. 7

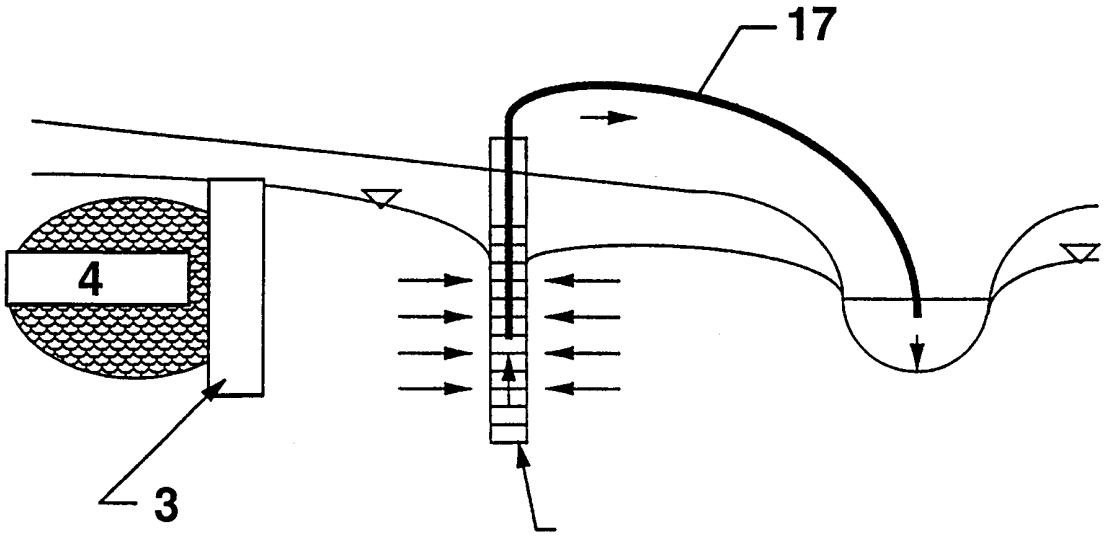

FIG. 8

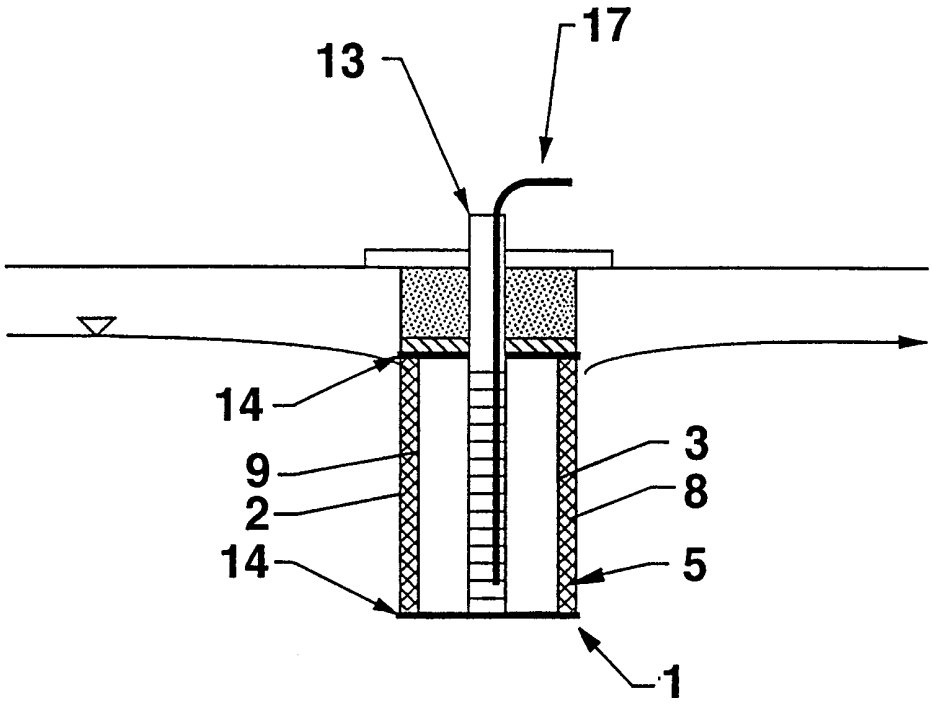

FIG. 9

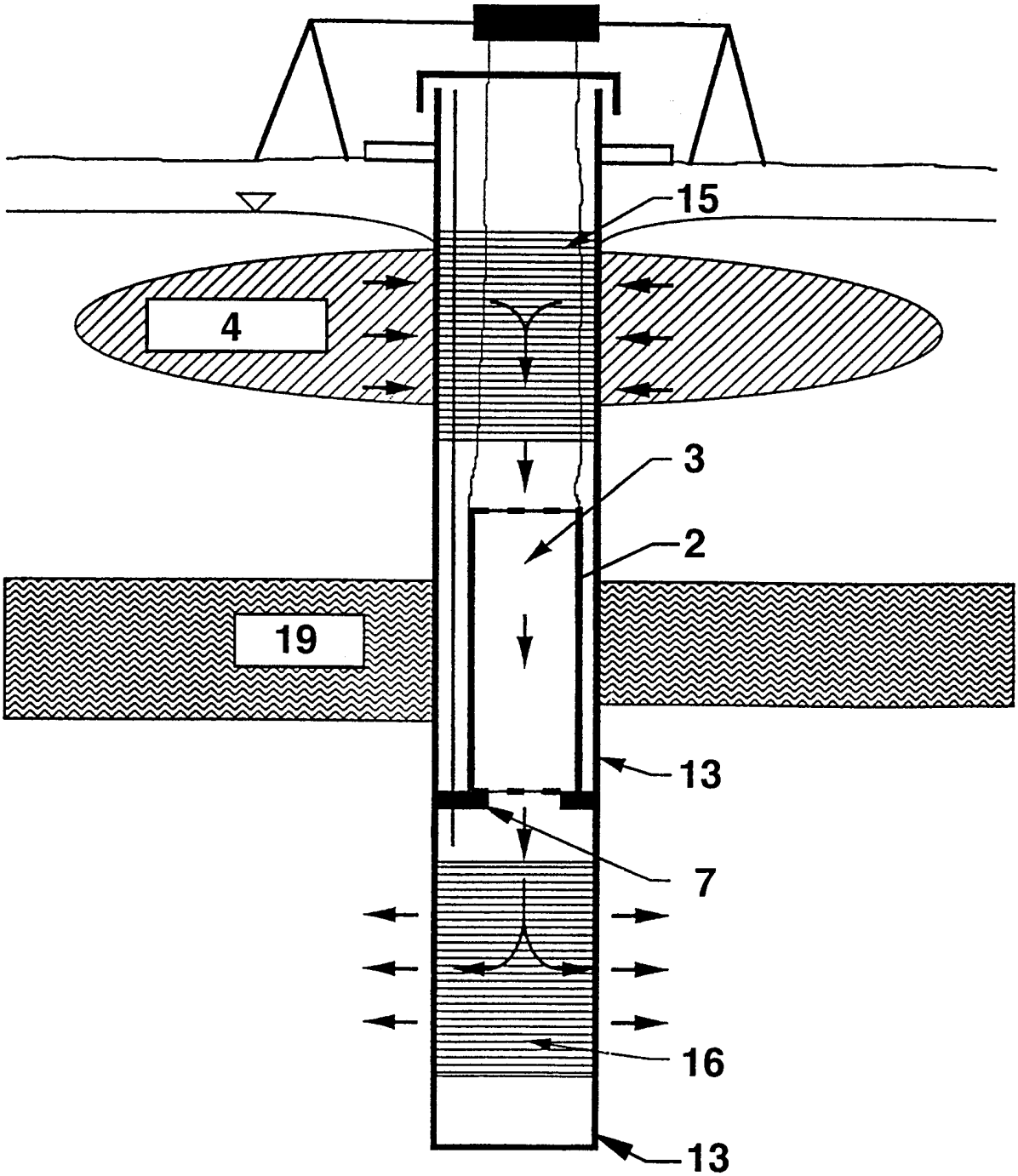

FIG. 10

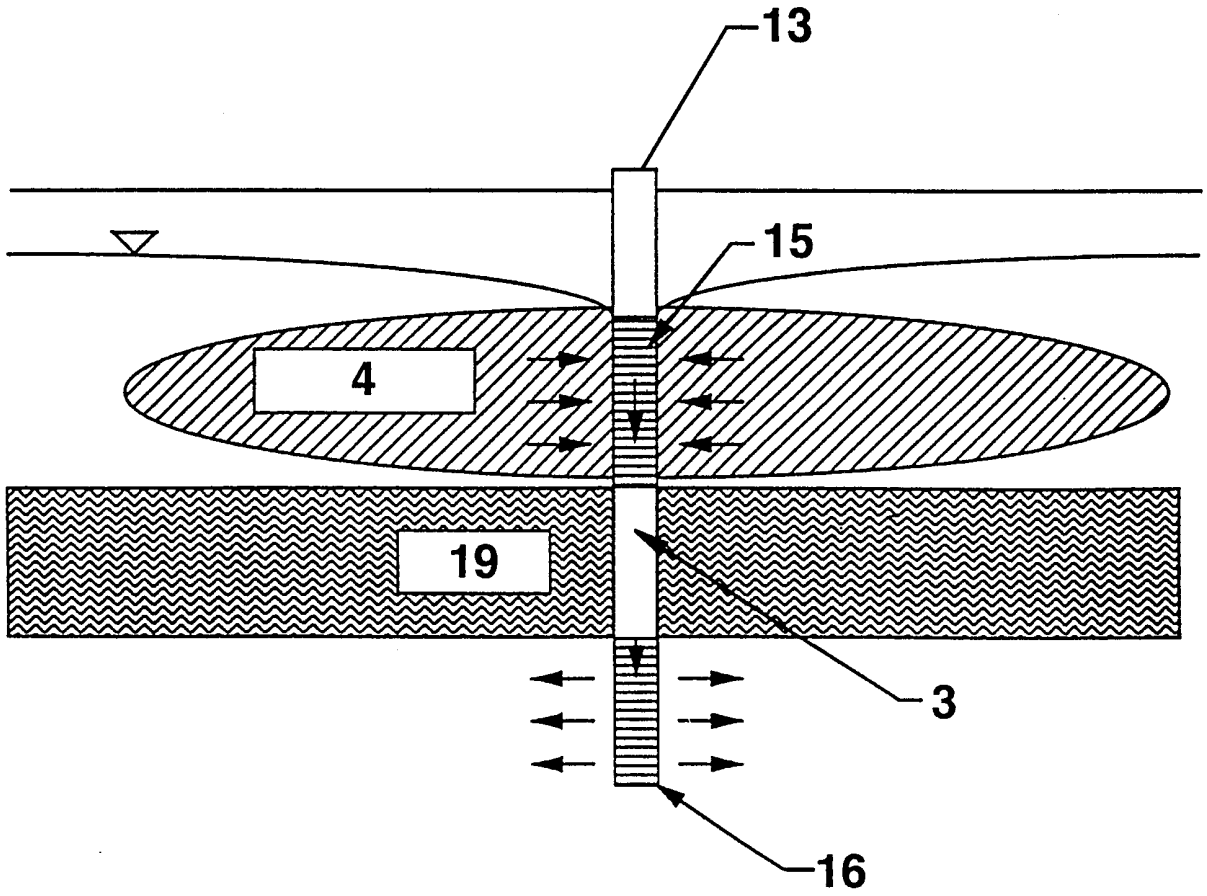

FIG. 11

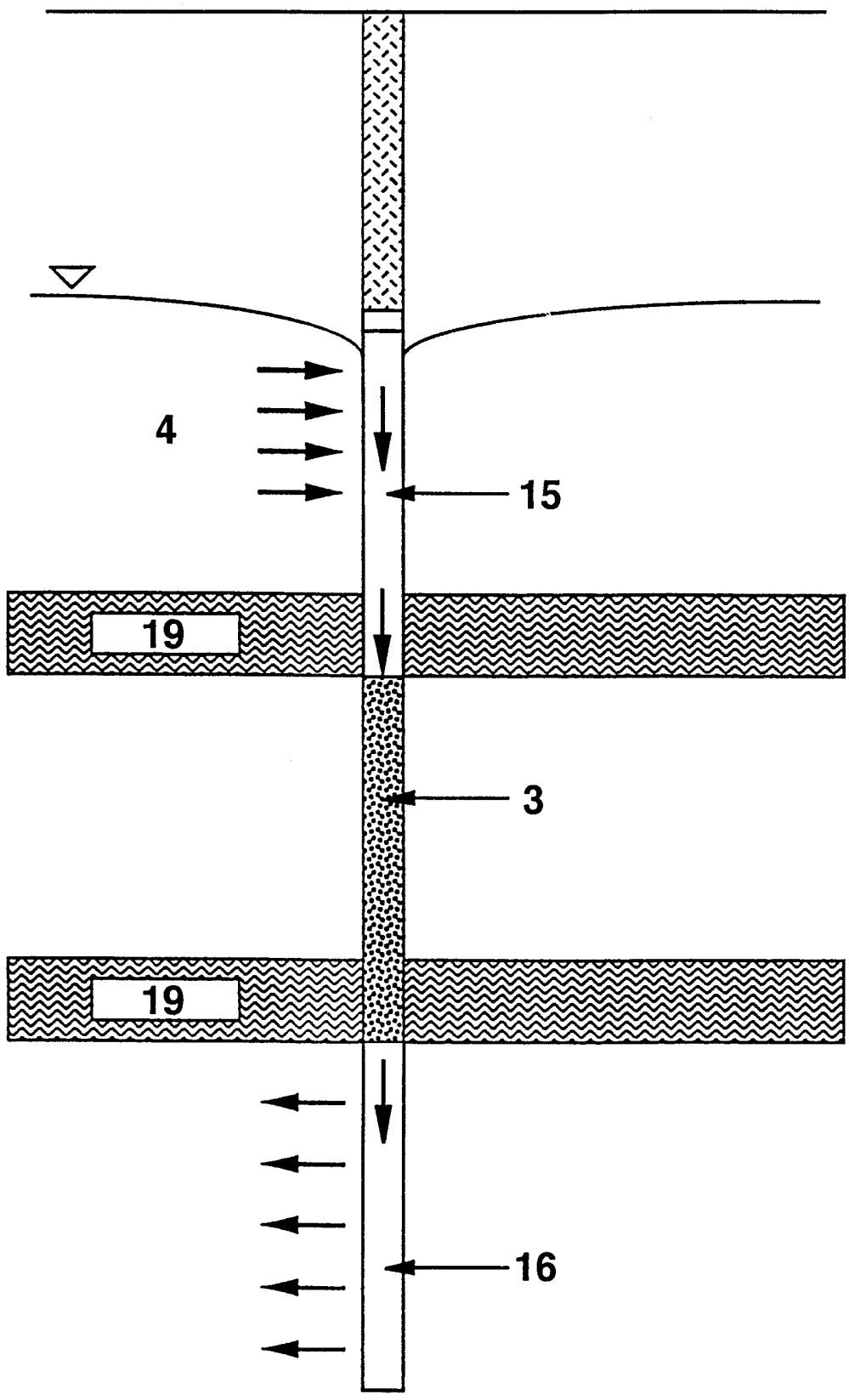

FIG. 12

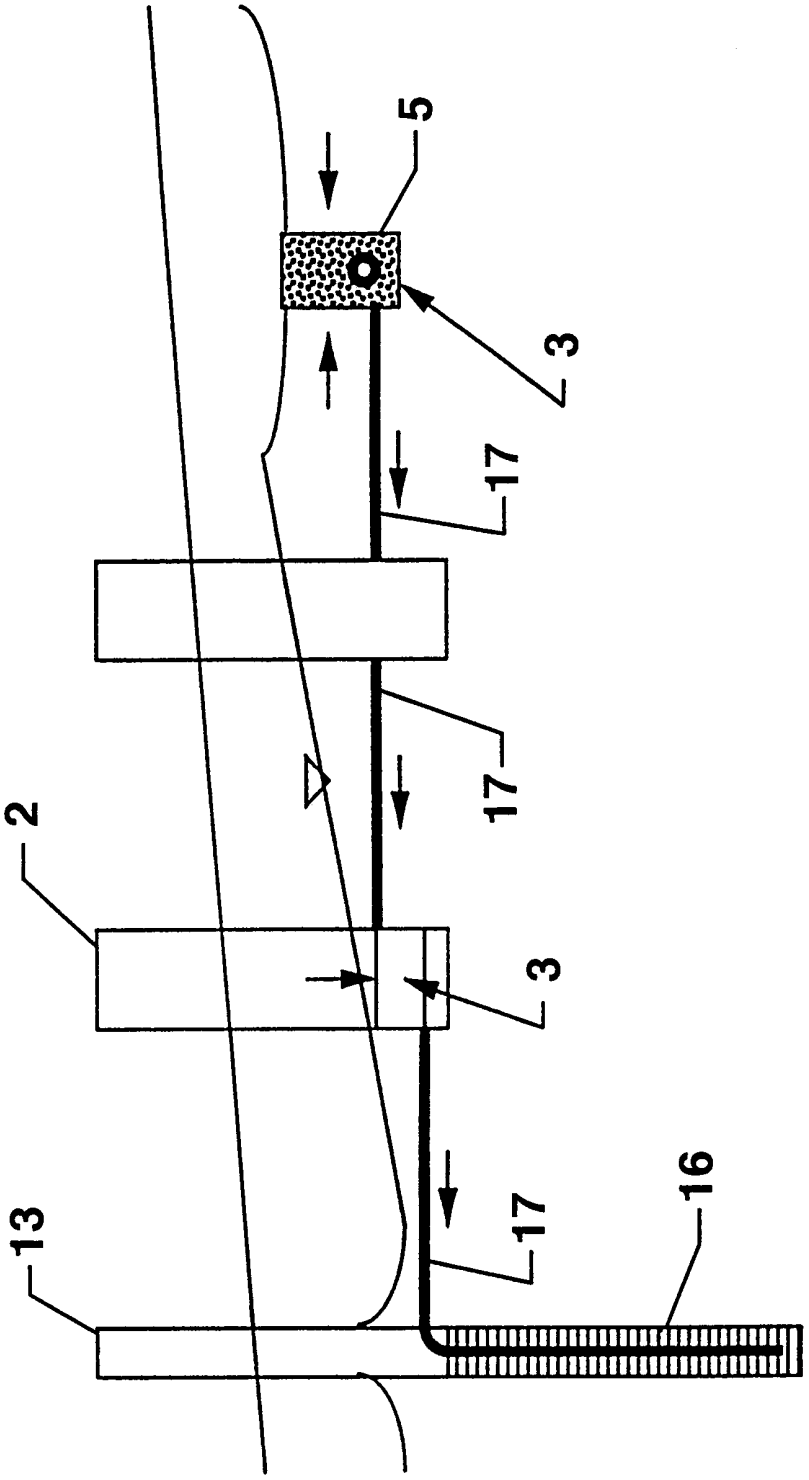

FIG. 13

INTERNATIONAL SEARCH REPORT

International application No.
PCT/US97/23935

A. CLASSIFICATION OF SUBJECT MATTER

IPC(6) :C02F 1/28, 1/42, 3/00
US CL : 210/170, 266, 282, 631, 660, 681, 694, 747
According to International Patent Classification (IPC) or to both national classification and IPC

B. FIELDS SEARCHED

Minimum documentation searched (classification system followed by classification symbols)

U.S. : 210/170, 266, 282, 631, 660, 681, 694, 747

Documentation searched other than minimum documentation to the extent that such documents are included in the fields searched

Electronic data base consulted during the international search (name of data base and, where practicable, search terms used)

C. DOCUMENTS CONSIDERED TO BE RELEVANT

Category*	Citation of document, with indication, where appropriate, of the relevant passages	Relevant to claim No.
Y	US 4,473,477 A (BEALL) 25 September 1984 (25-09-84), entire document.	1-20
Y	US 5,534,154 A (GILLHAM) 09 July 1996 (09-07-96), entire document.	1-20
A	US 4,664,809 A (FENTON ET AL) 12 May 1987 (12-05-87), entire document.	4, 9, 13, 18.

☐ Further documents are listed in the continuation of Box C. ☐ See patent family annex.

*	Special categories of cited documents:	"T"	later document published after the international filing date or priority date and not in conflict with the application but cited to understand the principle or theory underlying the invention
"A"	document defining the general state of the art which is not considered to be of particular relevance	"X"	document of particular relevance; the claimed invention cannot be considered novel or cannot be considered to involve an inventive step when the document is taken alone
"E"	earlier document published on or after the international filing date	"Y"	document of particular relevance; the claimed invention cannot be considered to involve an inventive step when the document is combined with one or more other such documents, such combination being obvious to a person skilled in the art
"L"	document which may throw doubts on priority claim(s) or which is cited to establish the publication date of another citation or other special reason (as specified)	"&"	document member of the same patent family
"O"	document referring to an oral disclosure, use, exhibition or other means		
"P"	document published prior to the international filing date but later than the priority date claimed		

Date of the actual completion of the international search 03 MARCH 1998	Date of mailing of the international search report 0 3 APR 1998
Name and mailing address of the ISA/US Commissioner of Patents and Trademarks Box PCT Washington, D.C. 20231 Facsimile No. (703) 305-3230	Authorized officer IVARS CINTINS Telephone No. (703) 308-0651

Form PCT/ISA/210 (second sheet)(July 1992)★