May 19, 1931. M. J. DE MASK 1,805,572

MULTIPLE BASE PLUG RECEPTACLE

Filed July 5, 1927

Fig. 1.

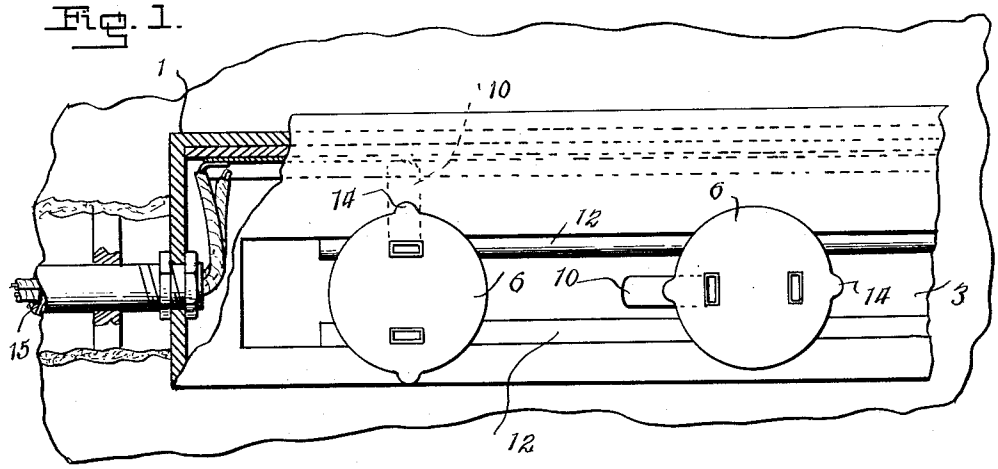

Fig. 2.

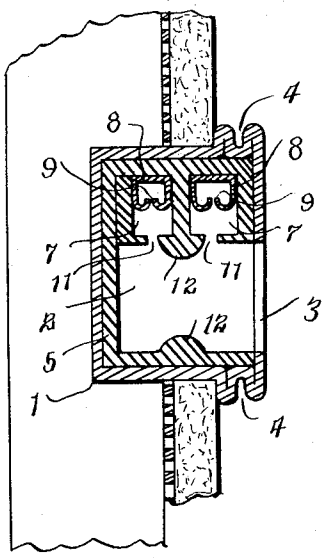

Fig. 3.

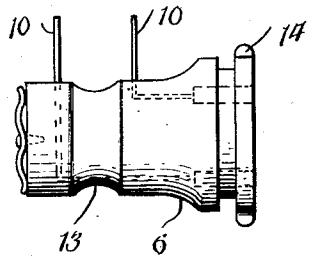

Inventor

M. J. DeMask

By Lacey & Lacey, Attorneys

Patented May 19, 1931 1,805,572

UNITED STATES PATENT OFFICE

MARTIN J. DE MASK, OF PITTSFIELD, MASSACHUSETTS

MULTIPLE BASE PLUG RECEPTACLE

Application filed July 5, 1927. Serial No. 203,505.

This invention relates to electric fixtures and more particularly to an outlet whereby a lamp, fan or other article or appliance may be connected to the service line from which the current is derived in a manner well understood.

The invention provides an outlet to which a number of electric appliances may be coupled and which provides for adjustment of the plugs to a convenient or advantageous position, displacement from the outlet being prevented while provision is had for making and breaking the circuit by rotation of the plug.

While the drawing illustrates a preferred embodiment of the invention, it is to be understood that in adapting the means to meet specific needs and requirements, the design may be varied and changes in the minor details of construction may be resorted to within the scope of the invention as claimed, without departing from the spirit thereof.

For a full understanding of the invention and the merits thereof, reference is to be had to the following description and the drawings hereto attached, in which,—

Figure 1 is a front view of a multiple base plug receptacle embodying the invention, an end portion being broken away and showing two plugs in position, one of said plugs being electrically connected to the service line and the other cut off from the current supply.

Figure 2 is a transverse sectional view of the fixture.

Figure 3 is a side view of a plug.

Corresponding and like parts are referred to in the following description and designated in the several views of the drawing by like reference characters.

The multiple base plug receptacle comprises a casing 1 which may be of any length. The casing 1 usually consists of metal, and in the preferable construction is formed of sheet metal in the form of a strip which is bent intermediate its longitudinal edges to enclose a space 2 which is open at its front, as indicated at 3. The upper and lower walls of the casing 1 are channeled adjacent the front, as indicated at 4, said channels being formed by crimping the sheet metal. The casing or receptacle 1 is set into an opening formed in the wall, ceiling, or like part, as indicated most clearly in Figure 2. The front portion of the casing or receptacle projects beyond the surface of the wall to expose the channels 4.

A lining 5 of insulating material, such as fiberoid, is snugly fitted within the casing or receptacle 1, and its front is open to register with the opening 3 in the front of the casing, whereby provision is had for longitudinal movement of the plug 6. Two conduits 7 are formed within the lining 5 and each receives a conducting strip 8 of a length substantially coextensive with the length of the receptacle. The conducting strips 8 are hollow and the inwardly presented sides are formed with longitudinal openings upon which border inwardly extending lips 9 which flare outwardly and come together at their inner edges. When the plugs 6 are adjusted to make electrical connection with the strips 8 the lips 9 are pressed apart and engage opposite sides of the contacts 10, thereby assuring a firm and positive connection. Slots 11 are formed in the walls of the conduits 7 facing the plug receiving space to receive the contacts 10, projecting radially from the plugs, when the plugs 6 are turned to project said contacts through slots 11 and between the lips 9 of the conducting strips 8. Ribs 12 project into the plug receiving space of the receptacle from opposite walls of the lining 5, and are adapted to engage the plugs 6 and prevent disengagement thereof from the receptacle. An annular groove 13, formed in the body of the plug, receives the ribs 12, thereby forming interlocking means between the plug and receptacle. The ribs 12 are of half round outline and the annular groove 13 is of corresponding formation to snugly fit the ribs. The opening 3 is of a width corresponding to the diameter of the body of the plug 6, it being understood that the plug 6 is circular in cross section, and the ribs 12 are cut away at one end, as indicated most clearly in Figure 1 to admit of the plugs being placed within the receptacle or removed therefrom. When a plug is placed in position and moved along the receptacle the annular groove 13 receives the ribs 12, thereby

preventing displacement of the plugs. Rotation of the plugs to press the contacts 10 through the slots 11 and between the lips 9 of the conducting strips 8 establishes electrical connection. To break the connection the plug 6 is rotated to withdraw the contact 10 from engagement with the strips 8 and from the conduits 7. Projections 14 are formed upon the sides of the plug adjacent its outer face and serve as indicators to make known the position of the plugs in the dark. These projections 14 also serve to enable a firm grip to be obtained upon the plug when it is desired to rotate the same to make or break the circuit, as required. The numeral 15 designates the service line and the wires thereof are electrically connected to the conducting strips 8, whereby current is supplied thereto.

Having thus described the invention, I claim:

1. An electric outlet comprising a base plug receptacle having an opening in one side extending the full length thereof to permit travel of an inserted plug, conducting strips within the receptacle extending through the length thereof at one side of the opening and electrically insulated from one another, a plug of circular cross section insertible endwise through the opening in the receptacle and movable sidewise along the receptacle, means to retain the plug in the receptacle, and contacts projecting radially from the plug whereby rotation of the plug within the receptacle at any point in the length of the latter will engage the contacts with the conducting strips or disengage them therefrom.

2. An electric outlet comprising a base plug receptacle having an opening in one side extending from end to end thereof, conducting strips within the receptacle at one side of the opening and extending through the length of the receptacle, each of the strips comprising spaced portions having longitudinal lips bordering upon the opening in the receptacle and normally in contact, a plug of circular cross section insertible endwise through the opening of the receptacle and rotatable in the receptacle and flat contacts projecting radially from the plug whereby upon rotation of the plug they will pass between the lips of the conducting strips and pry the same apart to make contact therewith.

3. A multiple base plug receptacle having an opening in one side, internal longitudinal parallel conduits at one side of the opening each having a longitudinal slot in the side presented to the opening and extending the full length of the conduit, conducting strips extending longitudinally within the conduits from end to end thereof, a plug of circular cross section insertible through the opening in the receptacle, and contacts projecting radially from the plug whereby upon rotation of the plug the contacts will pass through the slots in the sides of the respective conduits and engage the respective conducting strips.

4. A multiple base plug receptacle having an opening in one side, internal longitudinal ribs at opposite sides of the opening, longitudinal conducting strips at one side of the opening and at opposite sides of the rib at the same side of the opening and electrically insulated from one another, a plug insertible in the opening in the receptacle at ends of the ribs and constructed to engage the ribs and be retained in the receptacle thereby, and radial contacts on the plug engageable with the respective conducting strips by rotation of the plug.

5. An electric outlet comprising an elongated receptacle having an open side, conducting strips within the receptacle extending from end to end thereof and electrically insulated from one another, a plug insertible endwise through the open side of the receptacle and movable sidewise longitudinally of the receptacle and rotatable within the receptacle on its own longitudinal axis, radial contacts on the plug engageable with and disengageable from the conducting strips at any position in the length of the receptacle by rotation of the plug, and interengaging means between the receptacle and plug to prevent displacement of the plug in any adjusted position, said means being of less extent than the receptacle to permit insertion of the plug beside said means.

6. An electric outlet comprising an elongated receptacle having an open side, conducting strips within the receptacle extending from end to end thereof and electrically insulated from one another, a plug insertible endwise through the open side of the receptacle and movable bodily sidewise longitudinally of the receptacle and rotatable within the receptacle about its own longitudinal axis, radial contacts on the plug engageable with and disengageable from the conducting strips at any position in the length of the receptacle by rotation of the plug, and a longitudinal rib within the receptacle engaging the side of the plug to prevent displacement thereof, said rib being shorter than the receptacle to permit insertion of the plug at the end of the rib.

7. An electric outlet comprising an elongated receptacle having an open side, conducting strips within the receptacle extending from end to end thereof and electrically insulated from one another, longitudinal ribs extending longitudinally of the receptacle at opposite sides of the opening therein, said ribs terminating short of one end of the receptacle, and a plug insertible endwise through the open sides of the receptacle adjacent the ends of the ribs and provided between its ends with an annular groove adapt-

ed to engage said ribs whereby the plug may be moved longitudinally within the receptacle and rotated about its own longitudinal axis, the plug having radial contacts adapted to engage the conducting strips at any position in the length of the receptacle by rotation of the plug.

In testimony whereof I affix my signature.

MARTIN J. DE MASK. [L. S.]