US 20190120785A1

(19) United States

(12) Patent Application Publication

(10) Pub. No.: US 2019/0120785 A1

(43) Pub. Date: Apr. 25, 2019

Halac et al.

(54) **PRE-CONNECTED ANALYTE SENSORS**

(71) Applicant: **DexCom, Inc.**, San Diego, CA (US)

(72) Inventors: **Jason Halac**, San Diego, CA (US); **John Charles Barry**, San Diego, CA (US); **Becky L. Clark**, San Diego, CA (US); **Chris W. Dring**, Fremont, CA (US); **John Michael Gray**, San Diego, CA (US); **Kris Elliot Higley**, Ramona, CA (US); **Jeff Jackson**, Poway, CA (US); **David A. Keller**, Encinitas, CA (US); **Ted Tang Lee**, San Diego, CA (US); **Jason Mitchell**, Poway, CA (US); **Kenneth Pirondini**, San Diego, CA (US); **David Rego**, San Diego, CA (US); **Ryan Everett Schoonmaker**, Oceanside, CA (US); **Peter C. Simpson**, Cardiff, CA (US); **Craig Thomas Gadd**, Lemon Grove, CA (US); **Kyle Thomas Stewart**, San Diego, CA (US)

(21) Appl. No.: **16/168,742**

(22) Filed: **Oct. 23, 2018**

Related U.S. Application Data

(63) Continuation of application No. 16/167,976, filed on Oct. 23, 2018.

(60) Provisional application No. 62/576,560, filed on Oct. 24, 2017.

Publication Classification

(51) **Int. Cl.**

G01N 27/327	(2006.01)
A61B 5/1486	(2006.01)
A61B 5/145	(2006.01)
A61B 5/1495	(2006.01)
A61B 5/1473	(2006.01)
A61B 5/1459	(2006.01)
G01N 33/66	(2006.01)

(52) **U.S. Cl.**

CPC ***G01N 27/3273*** (2013.01); ***A61B 5/14865*** (2013.01); ***A61B 5/14532*** (2013.01); ***G01N 33/66*** (2013.01); ***A61B 5/1473*** (2013.01); ***A61B 5/1459*** (2013.01); ***A61B 5/1495*** (2013.01)

(57) **ABSTRACT**

Pre-connected analyte sensors are provided. A pre-connected analyte sensor includes a sensor carrier attached to an analyte sensor. The sensor carrier includes a substrate configured for mechanical coupling of the sensor to testing, calibration, or wearable equipment. The sensor carrier also includes conductive contacts for electrically coupling sensor electrodes to the testing, calibration, or wearable equipment.

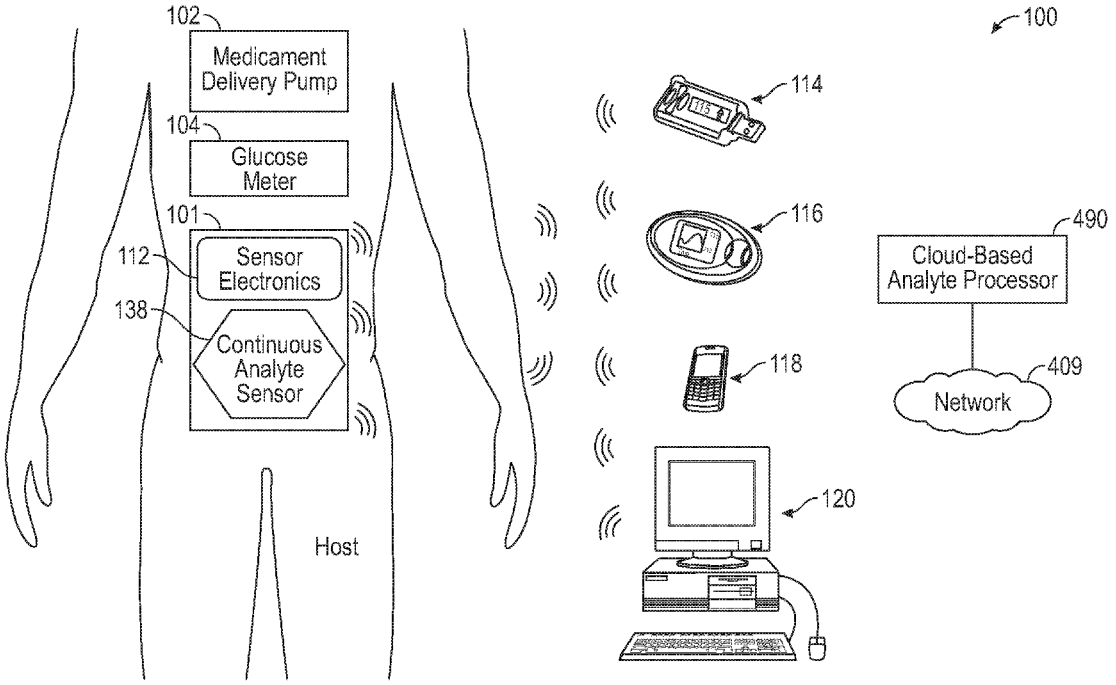

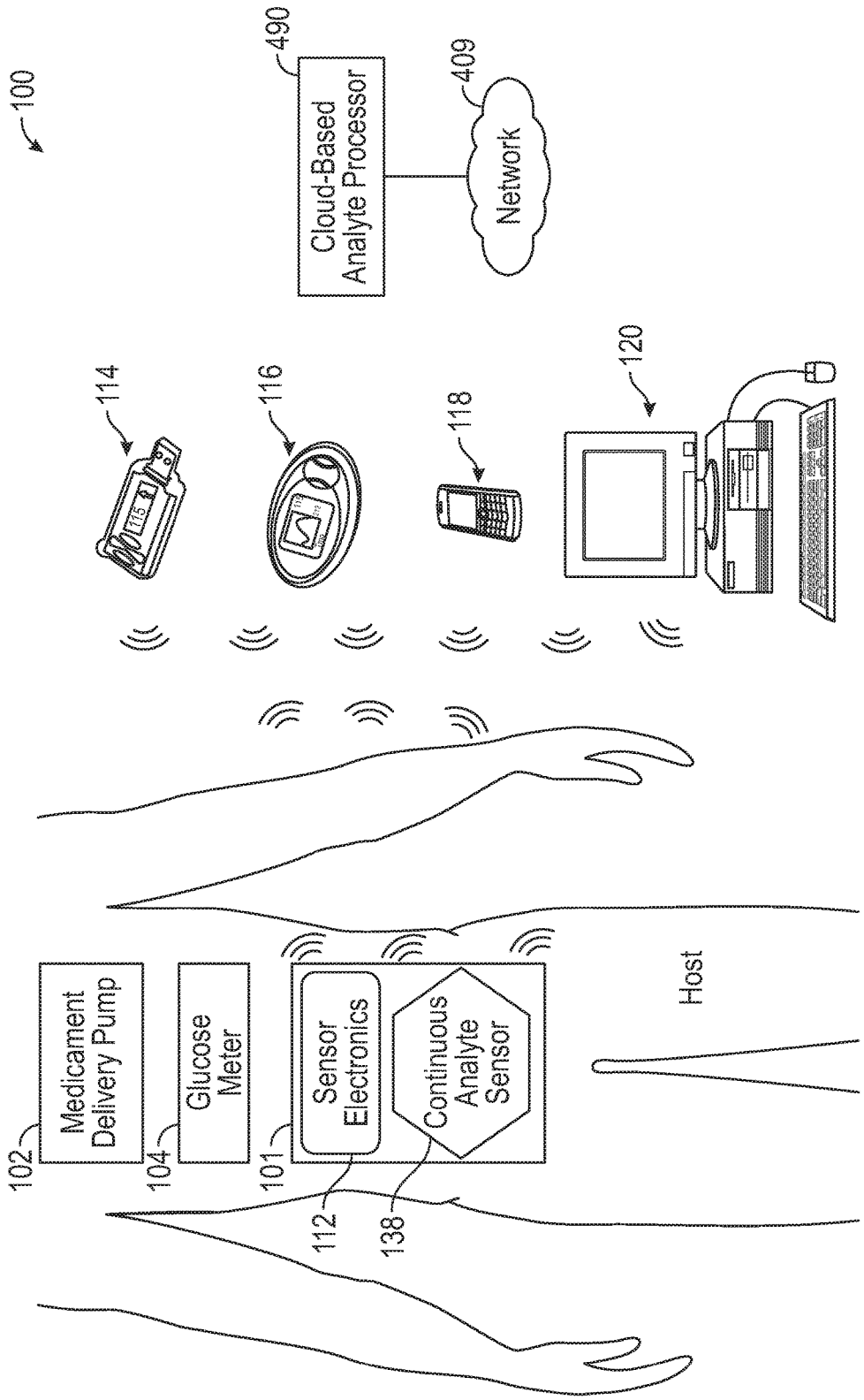
100
490
Cloud-Based Analyte Processor
409
Network
114
116
118
120
102
Medicament Delivery Pump
104
Glucose Meter
101
Sensor Electronics
Continuous Analyte Sensor
112
138
Host

FIG. 1

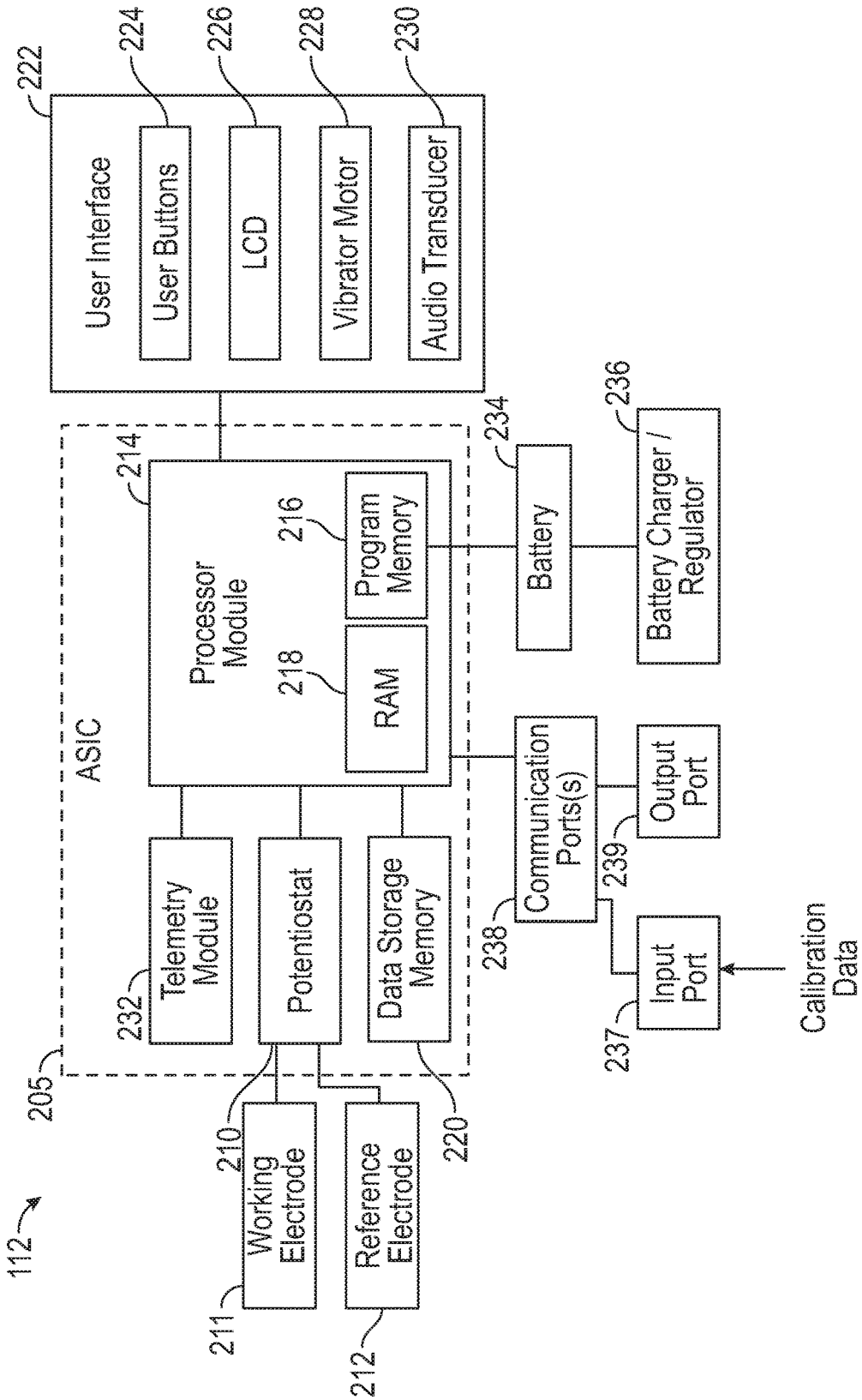
112
205
ASIC
222
User Interface
224
User Buttons
226
LCD
228
Vibrator Motor
230
Audio Transducer
214
Processor Module
216
Program Memory
218
RAM
232
Telemetry Module
Potentiostat
Data Storage Memory
210
Working Electrode
211
Reference Electrode
212
220
234
Battery
236
Battery Charger / Regulator
238
Communication Ports(s)
239
Output Port
237
Input Port
Calibration Data

FIG. 2

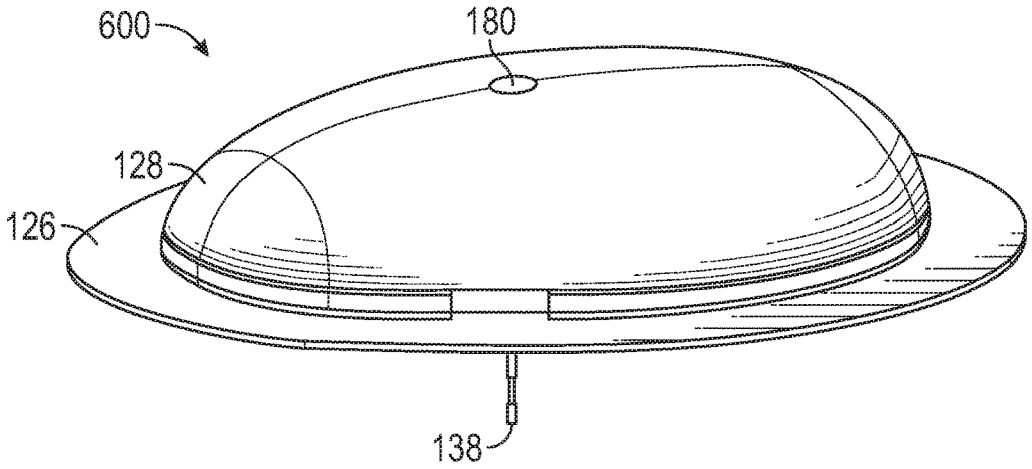

FIG. 3A

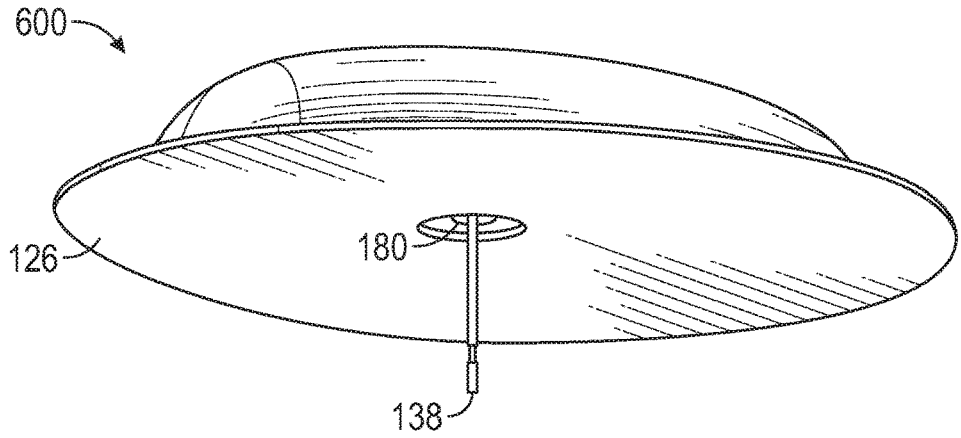

FIG. 3B

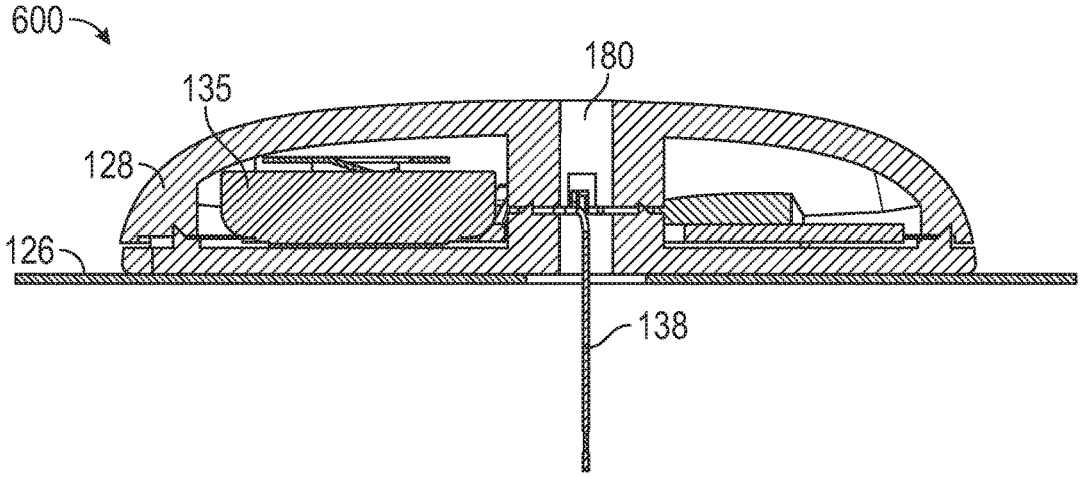

FIG. 3C

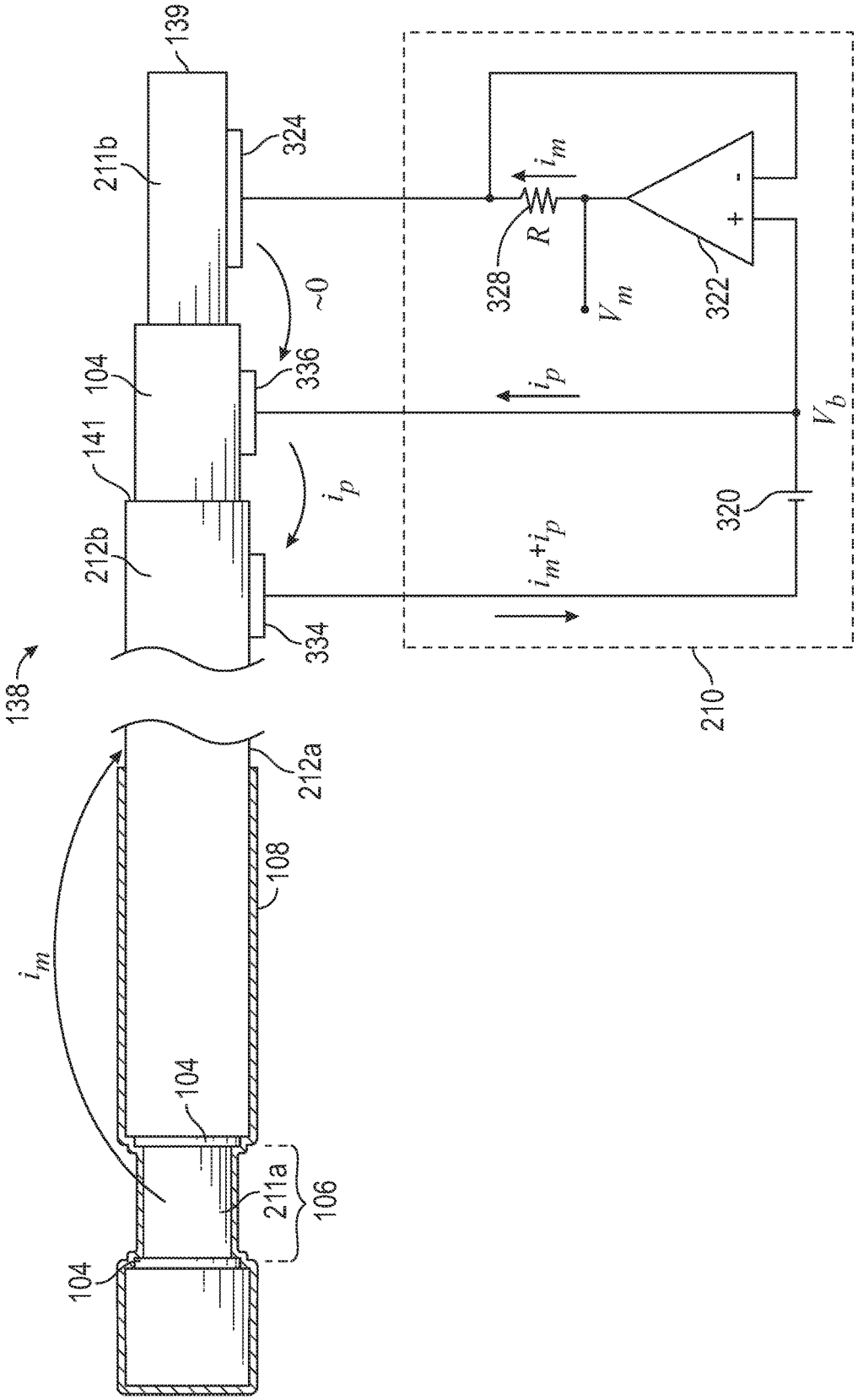
138
139
211b
324
104
336
141
212b
334
212a
108
104
211a
106
104
i_m
~0
i_p
i_m
R
328
V_m
322
i_p
V_b
320
i_m+i_p
210

FIG. 3D

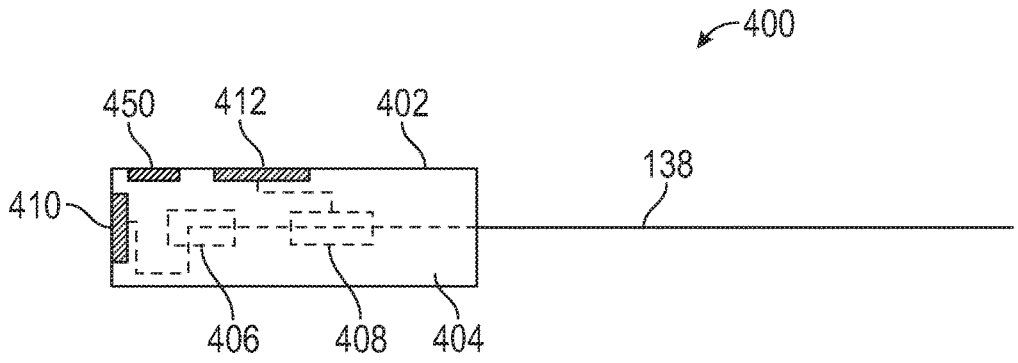

FIG. 4A

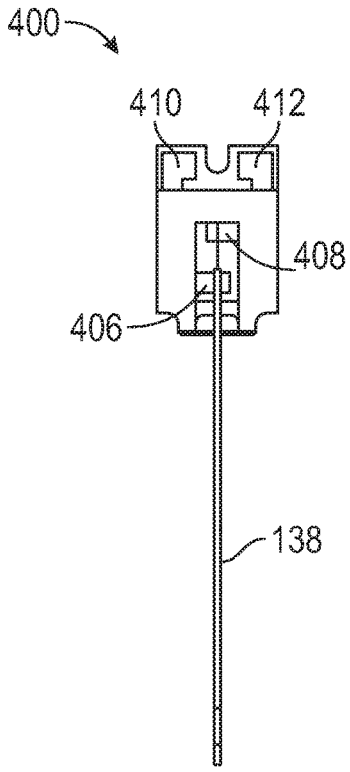

FIG. 4B

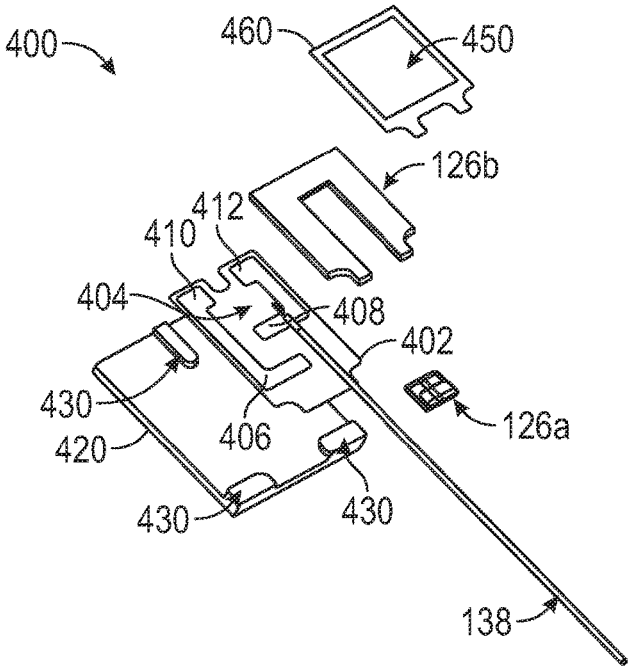

FIG. 4C

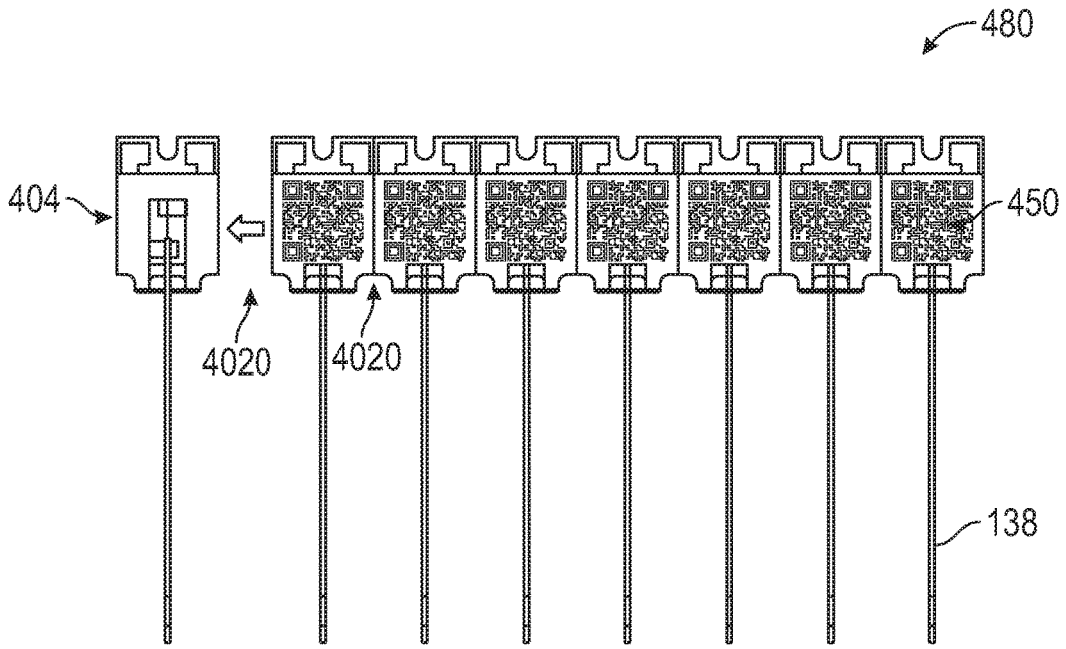

FIG. 4D

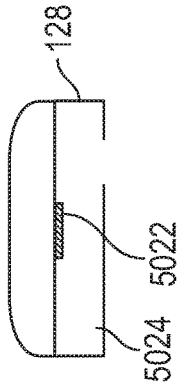

FIG. 5C

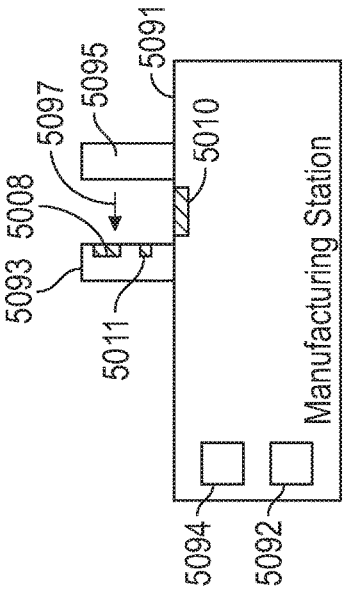

FIG. 5B

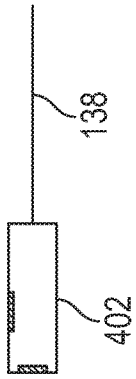

FIG. 5E

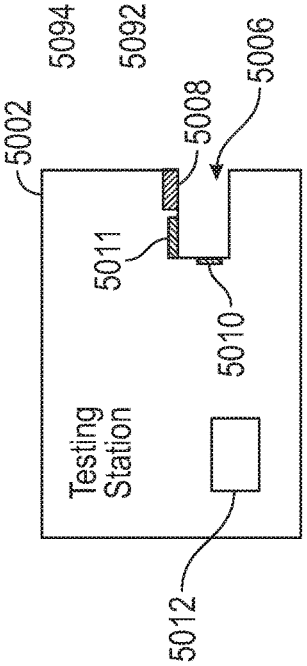

FIG. 5A

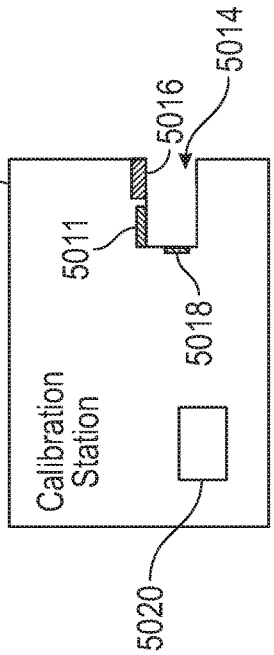

FIG. 5D

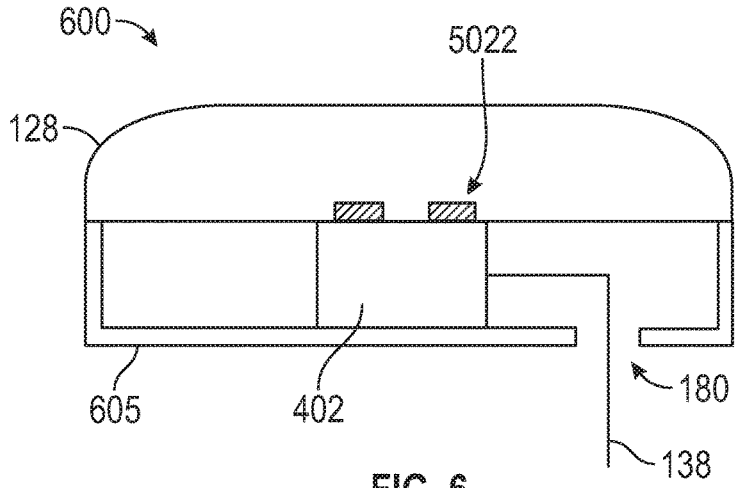

FIG. 6

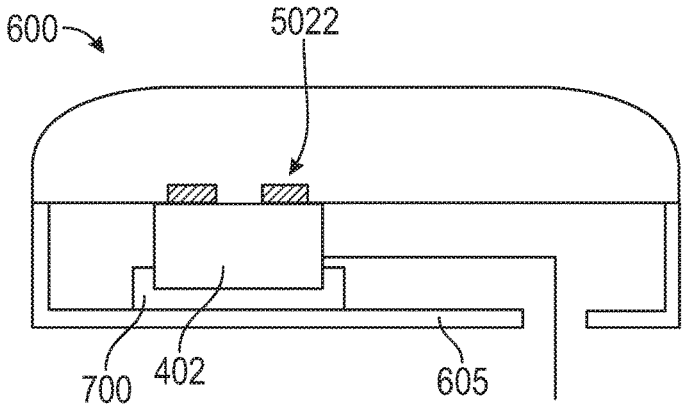

FIG. 7

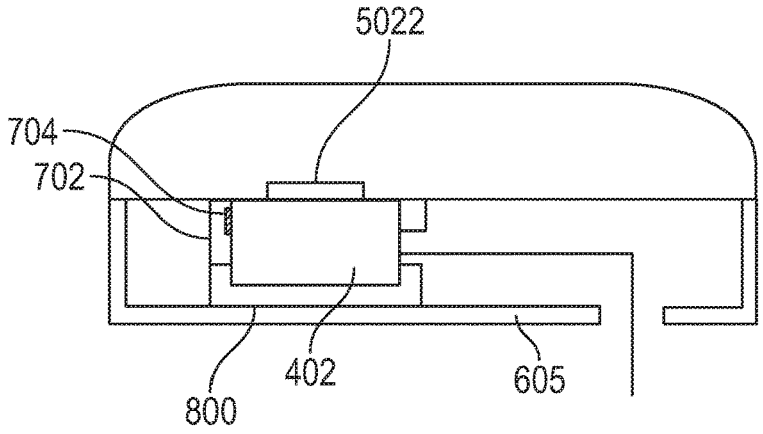

FIG. 8

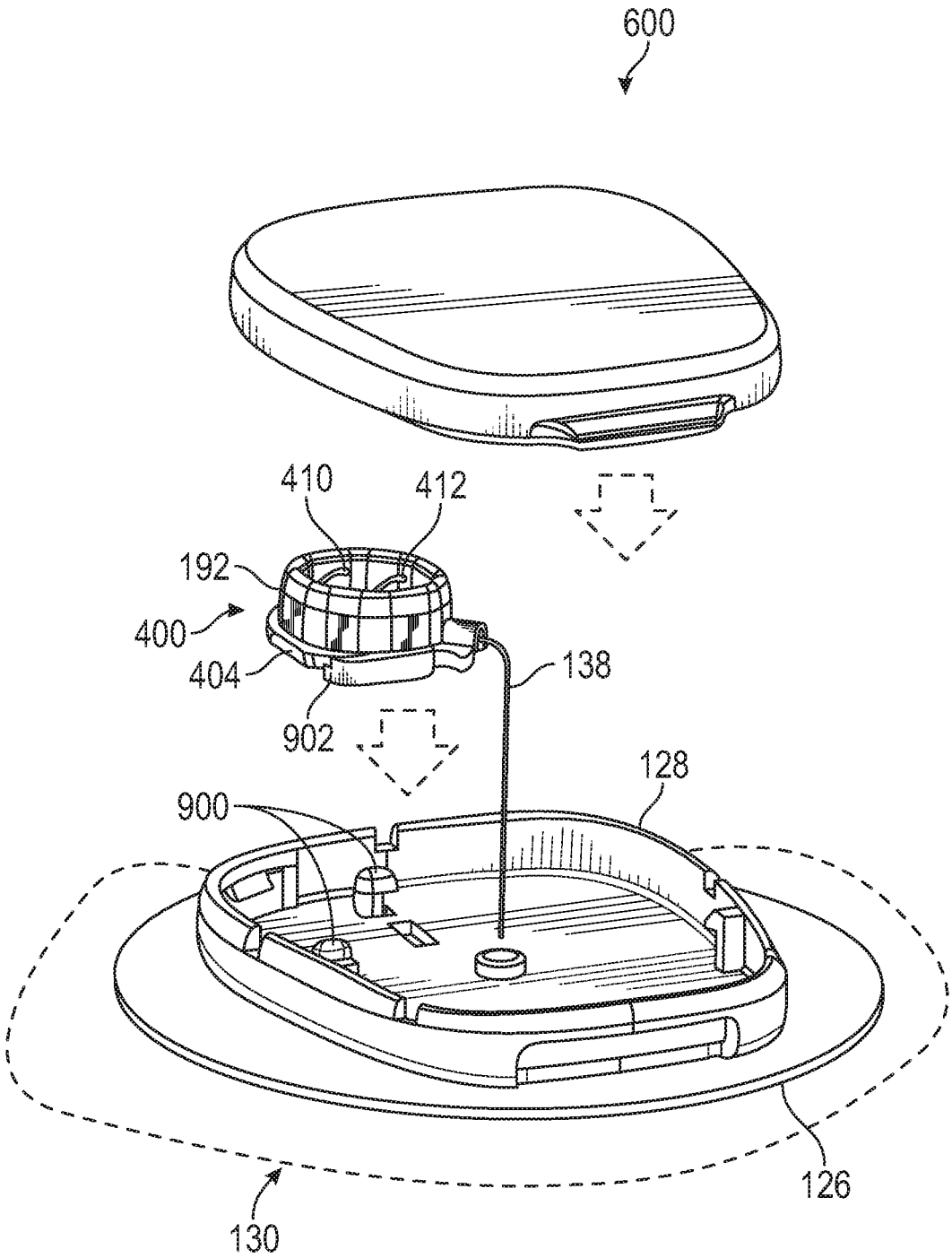

FIG. 9

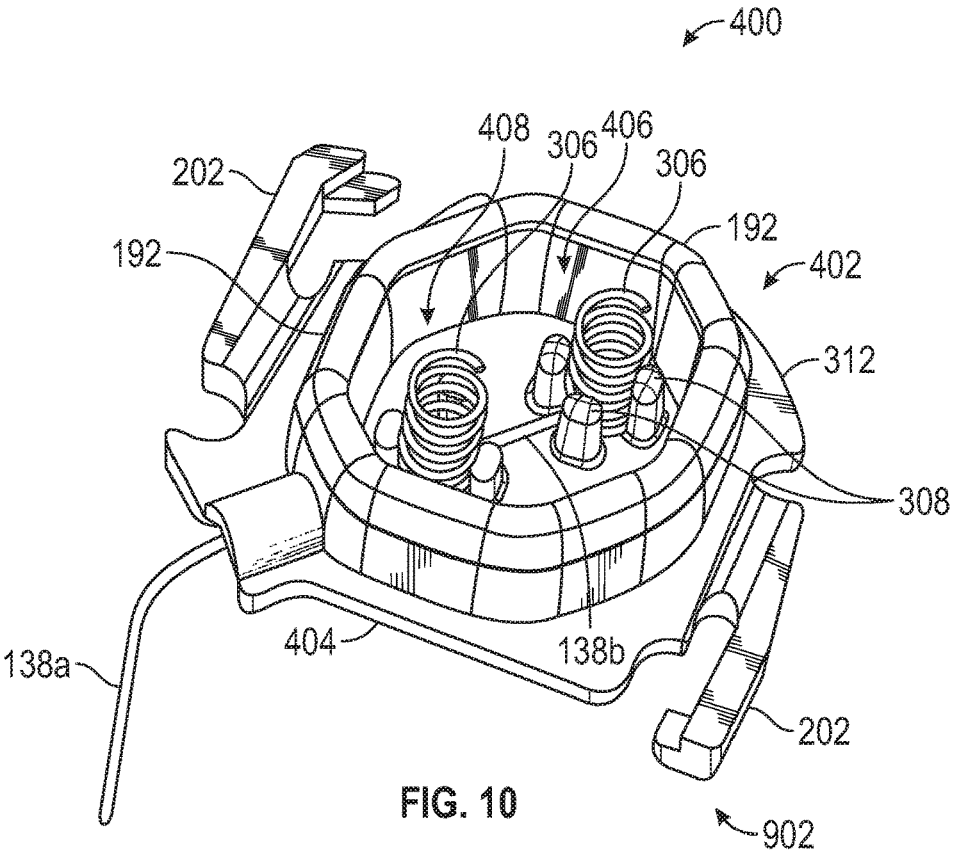
400
408
306
406
306
202
192
192
402
312
308
138a
404
138b
202
902

FIG. 10

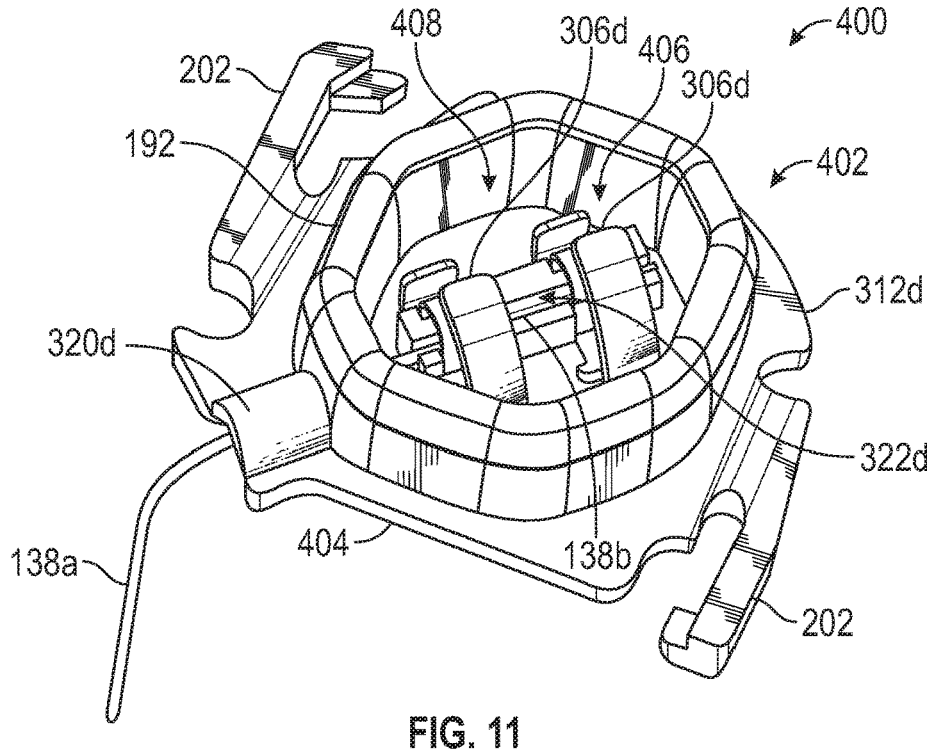
408
306d
406
400
202
306d
192
402
312d
320d
322d
138a
404
138b
202

FIG. 11

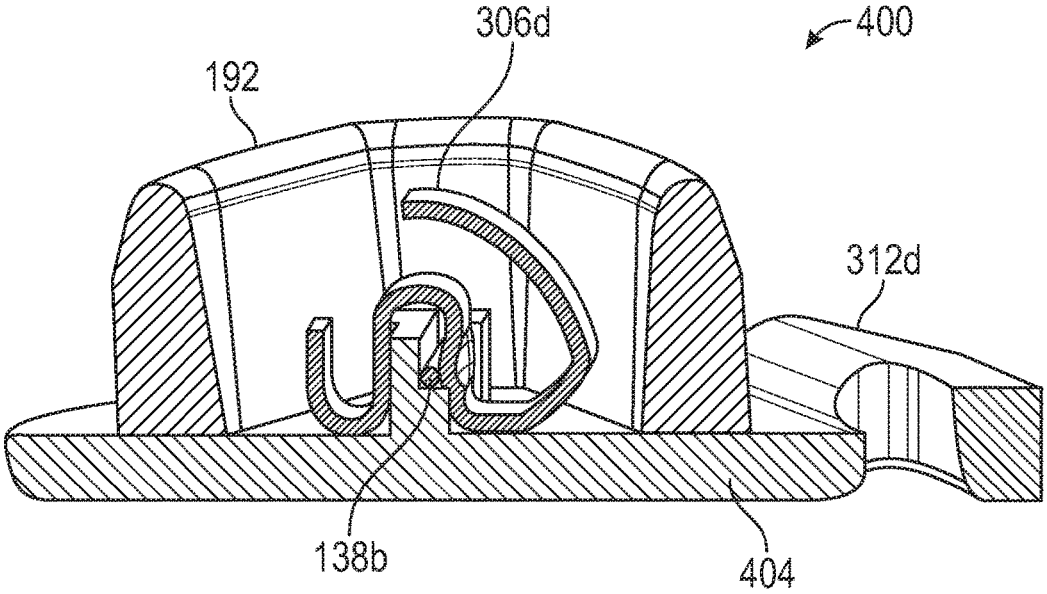

FIG. 12

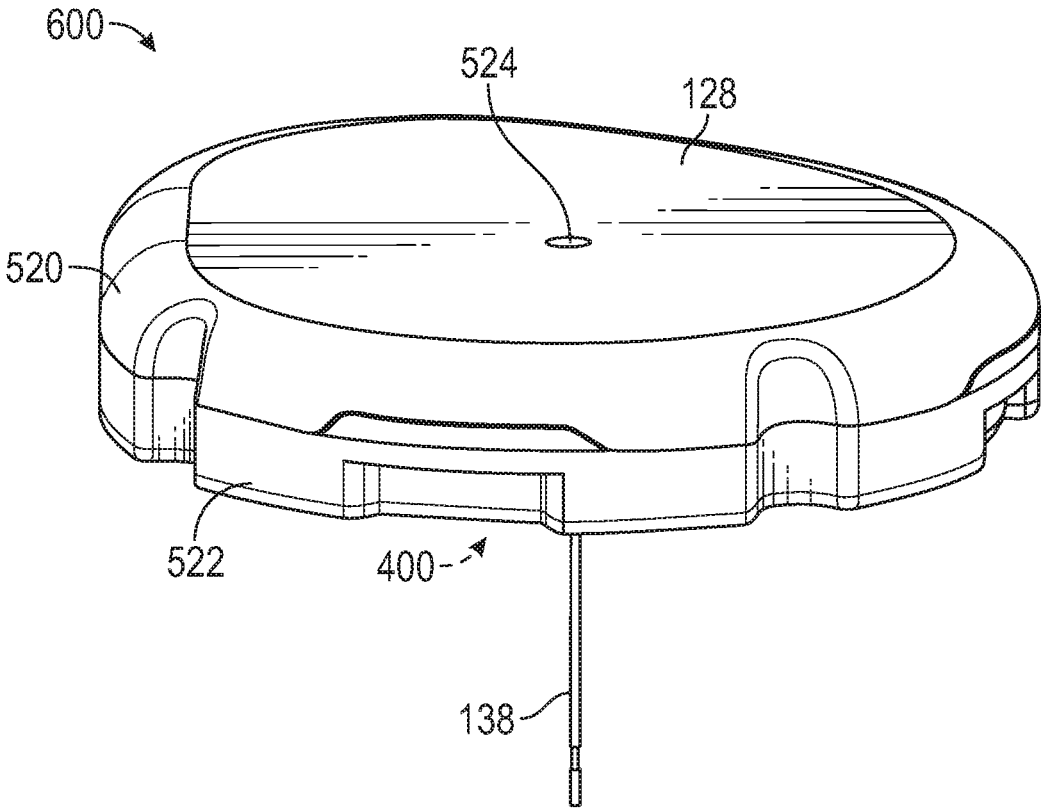

FIG. 13A

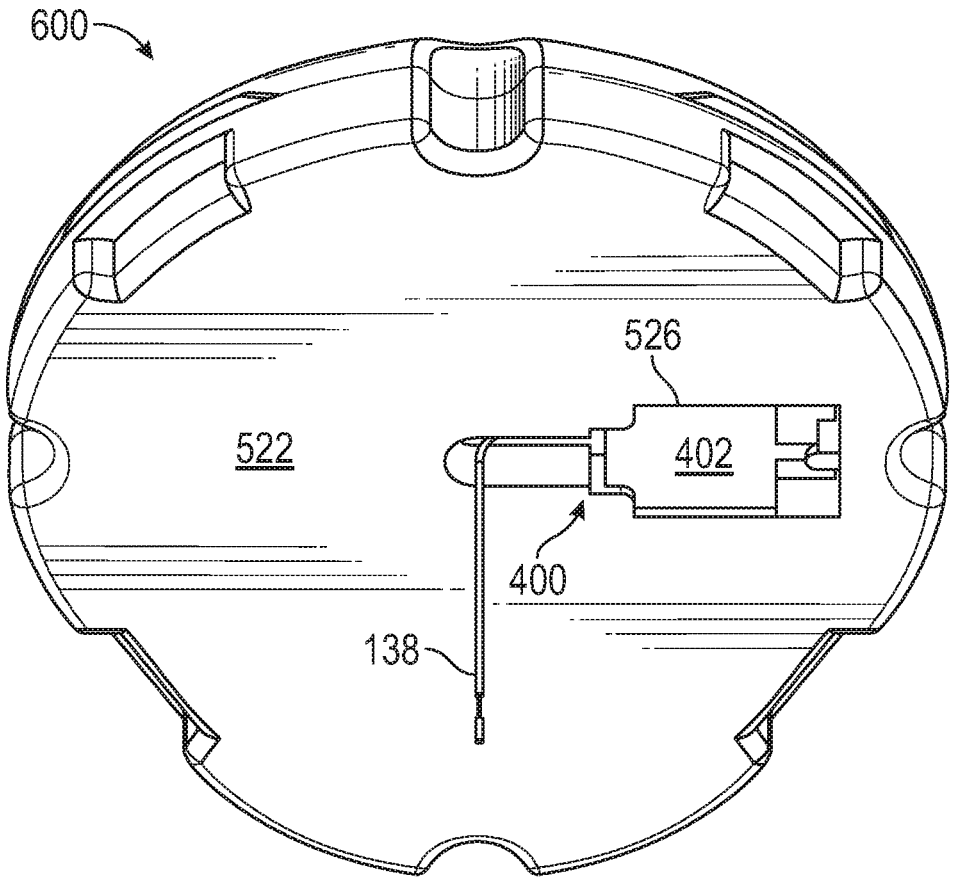

FIG. 13B

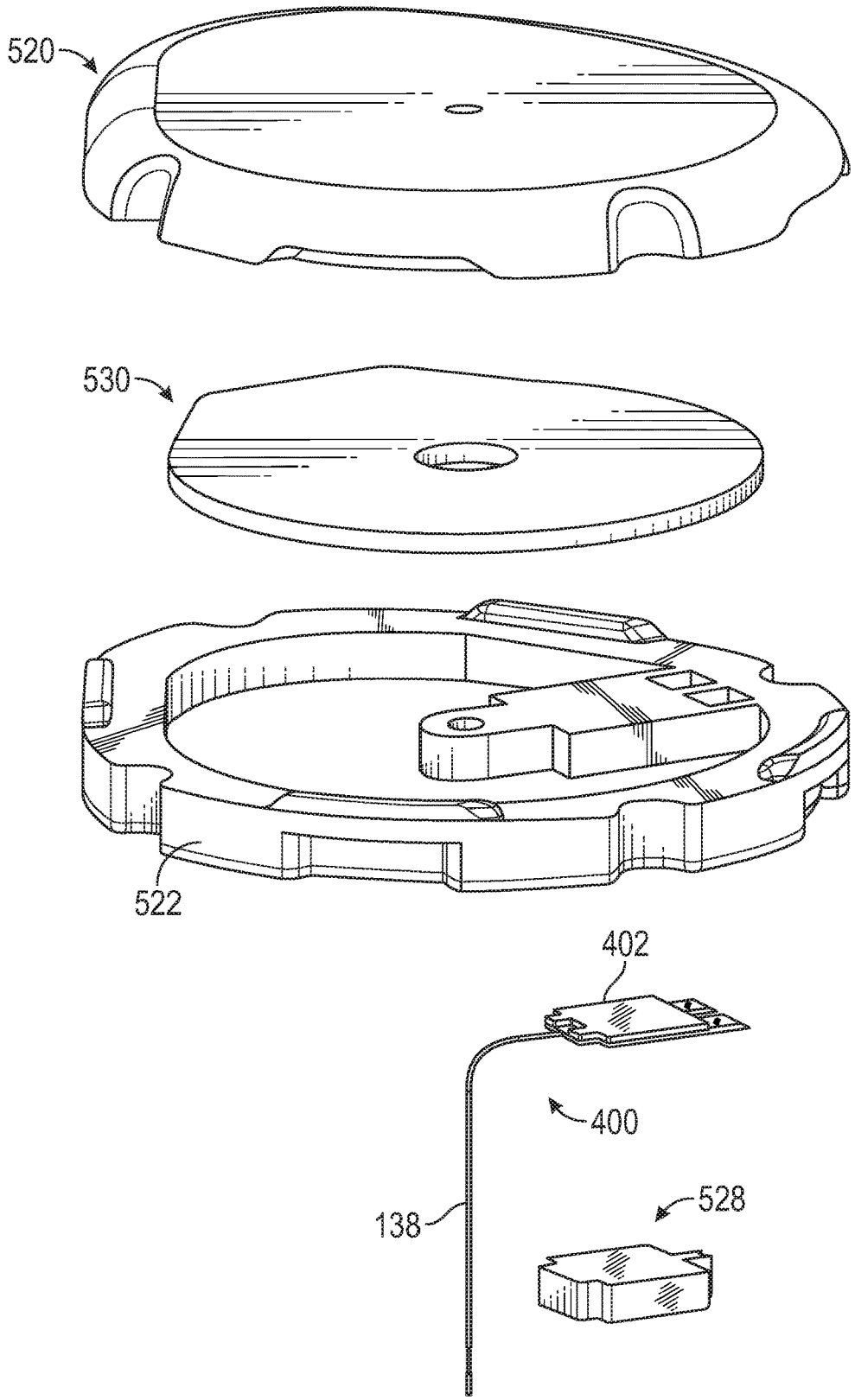

FIG. 13C

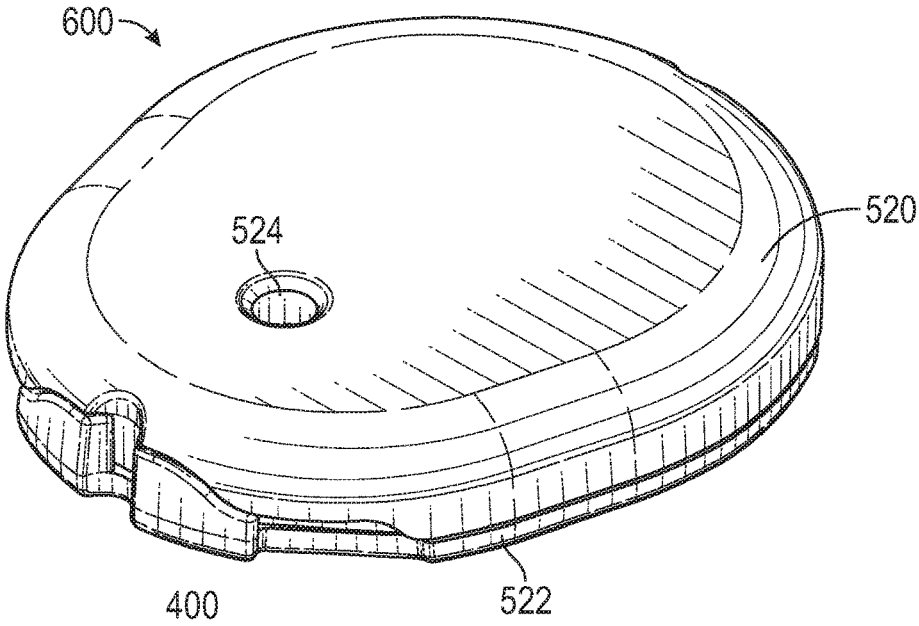

FIG. 14A

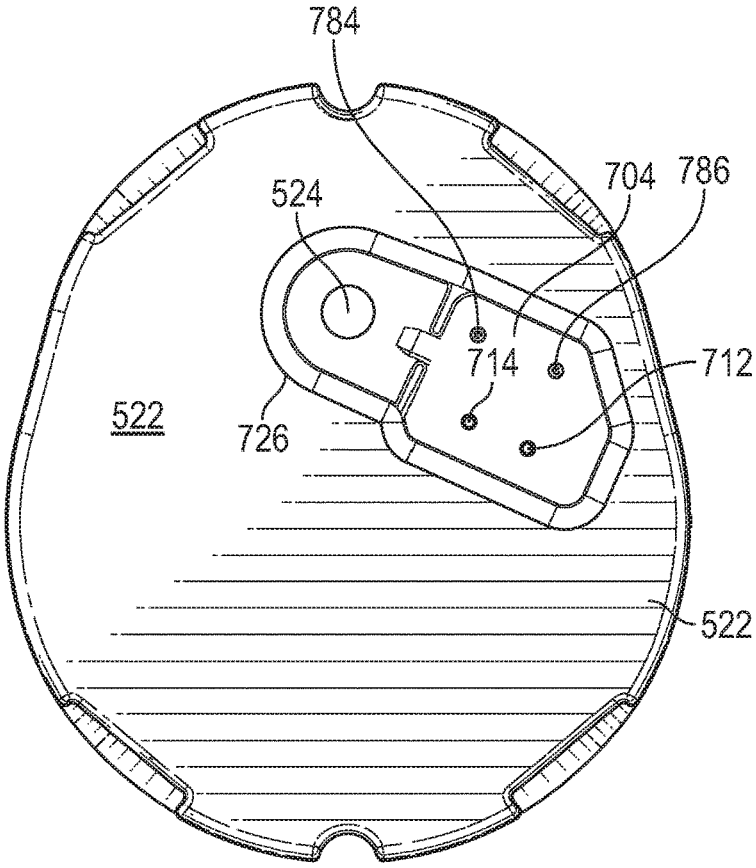

FIG. 14B

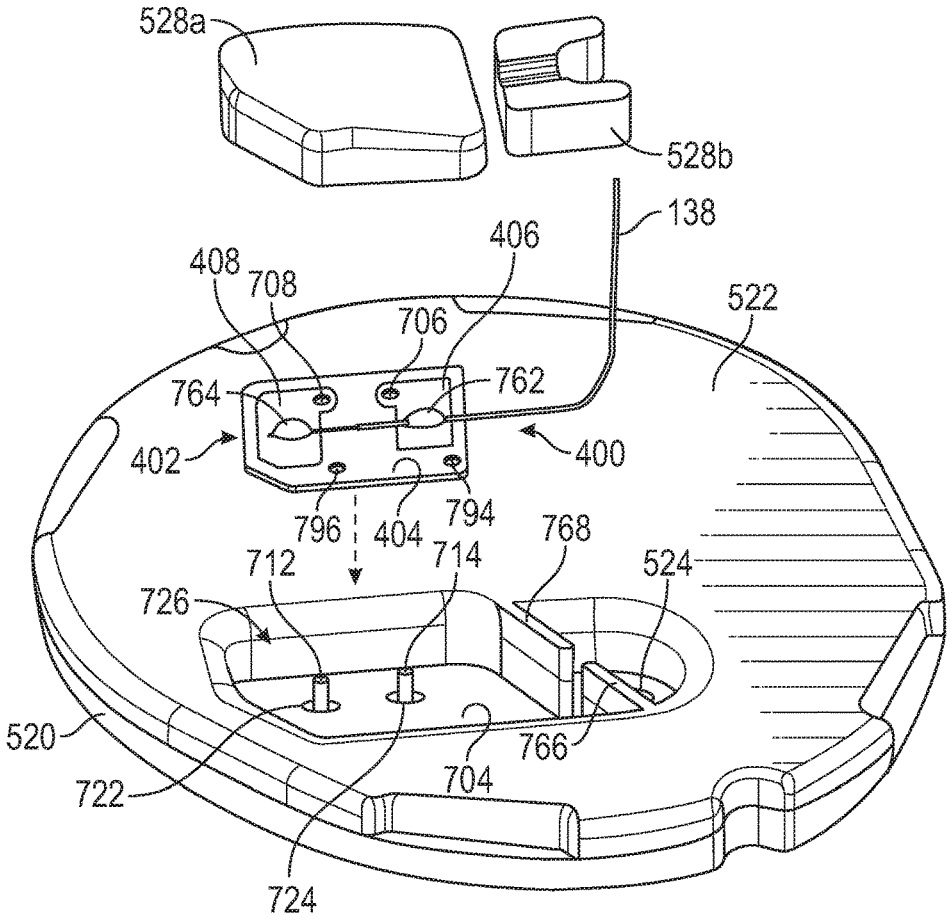

FIG. 14C

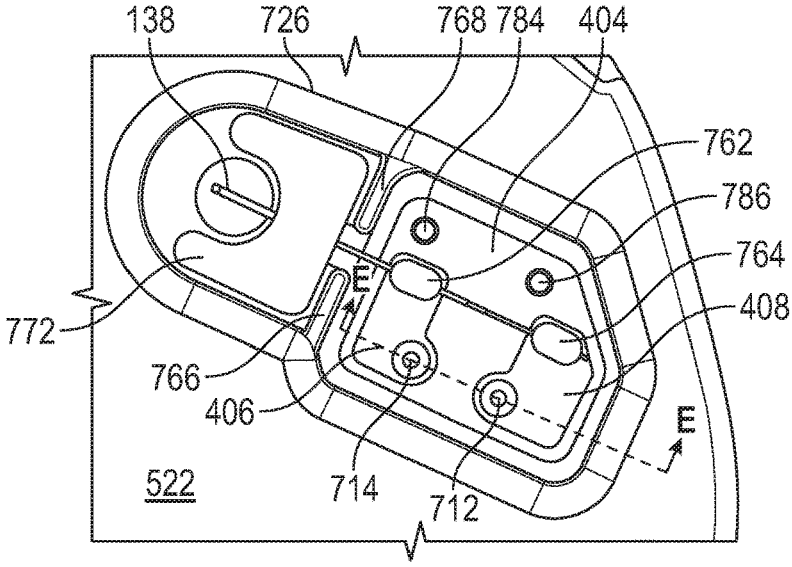

FIG. 14D

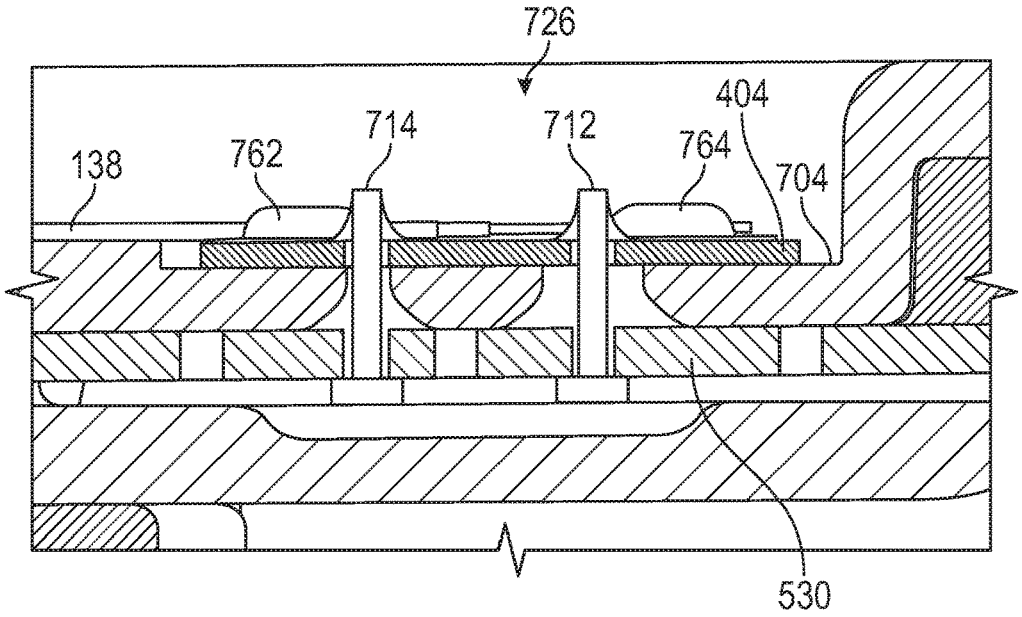

FIG. 14E

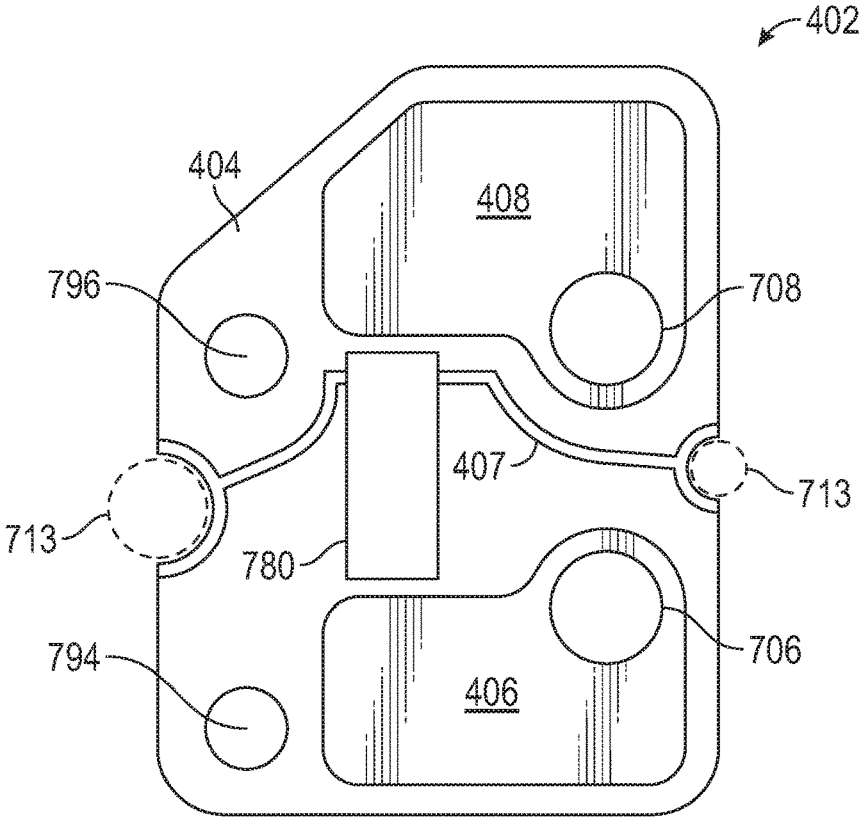

FIG. 15A

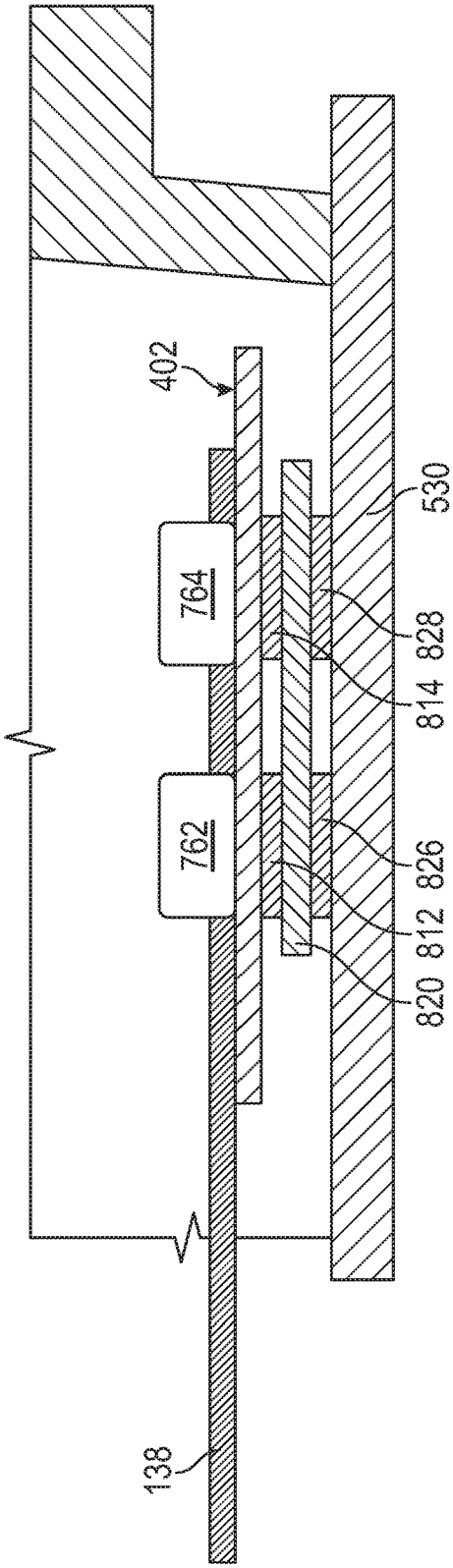

FIG. 15B

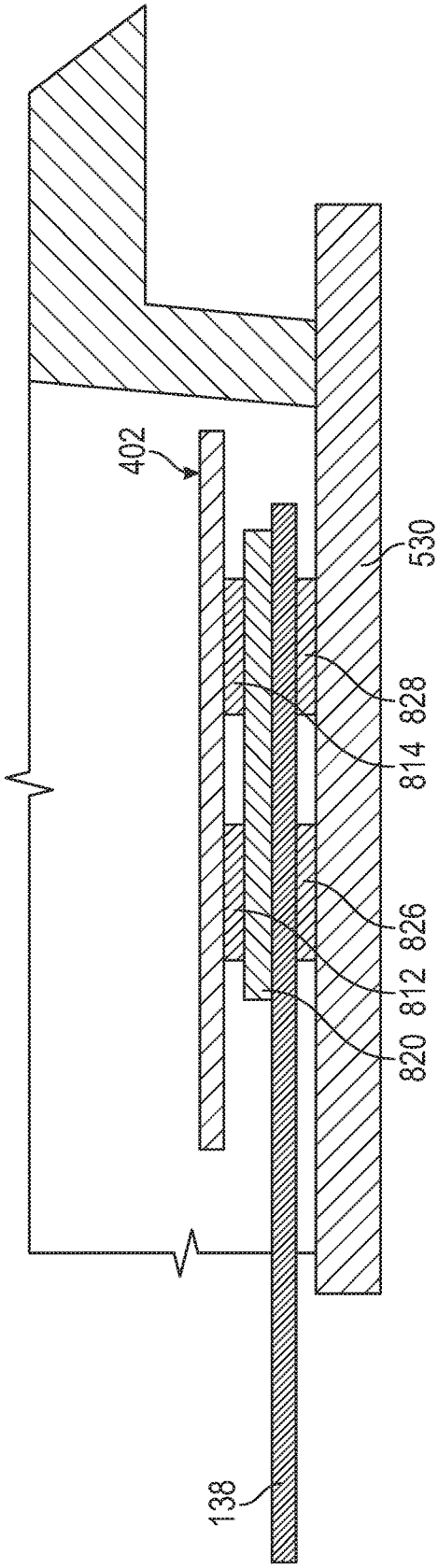

FIG. 15C

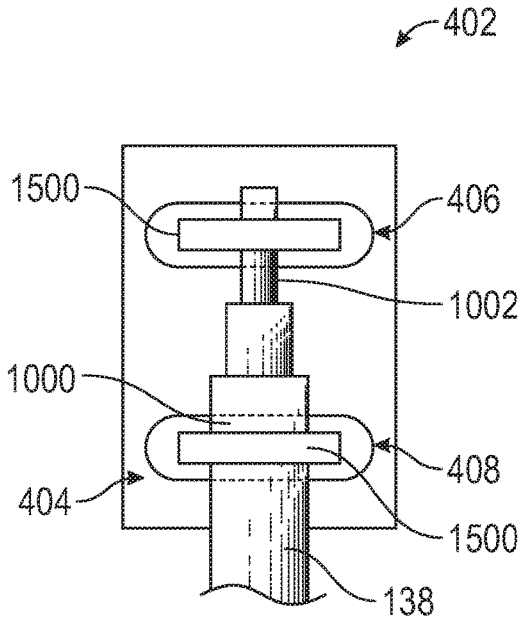

FIG. 16

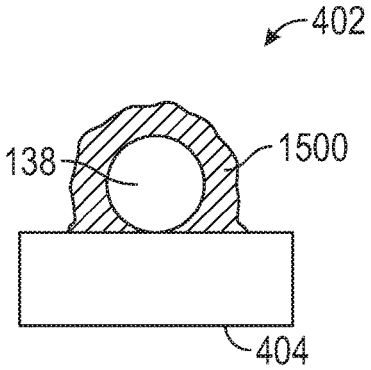

FIG. 17

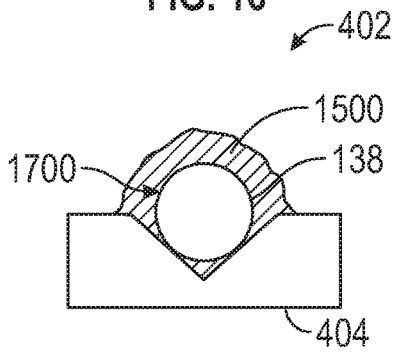

FIG. 18

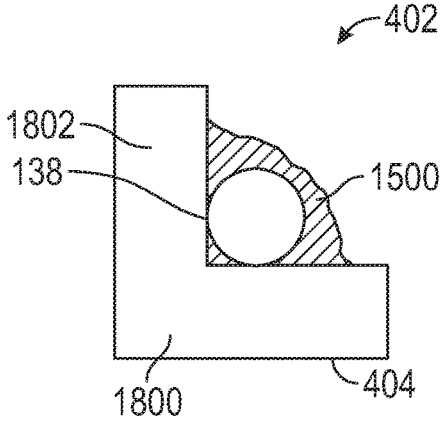

FIG. 19

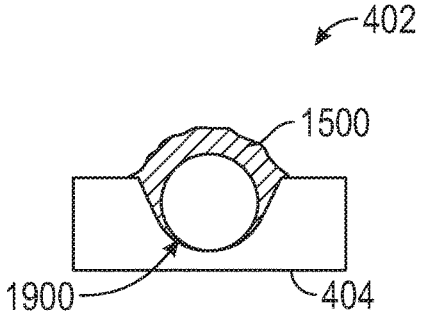

FIG. 20

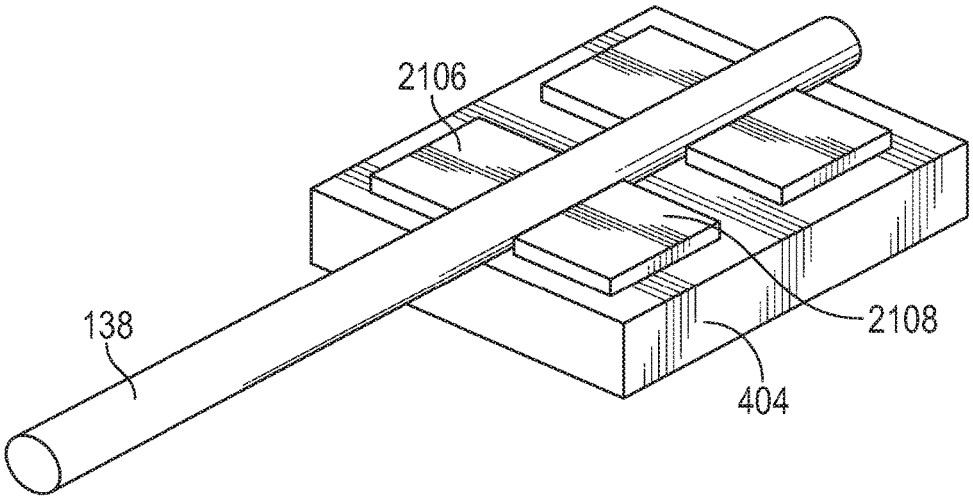

FIG. 21A

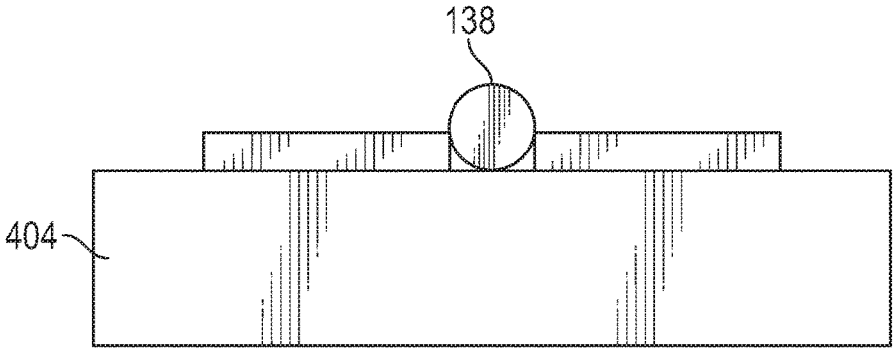

FIG. 21B

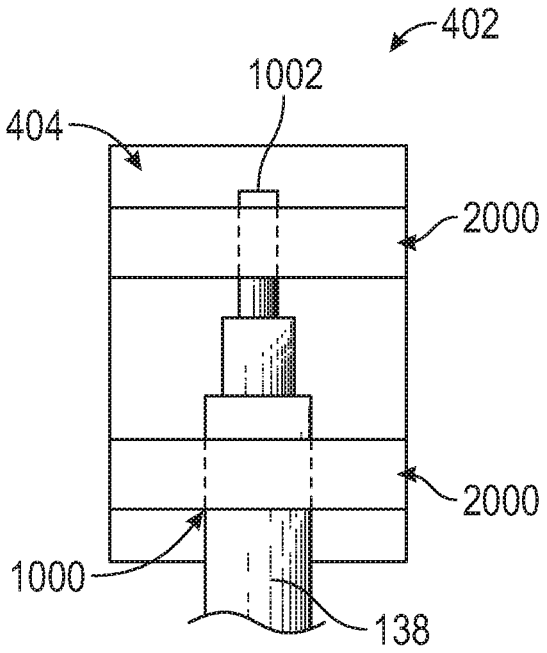

FIG. 22

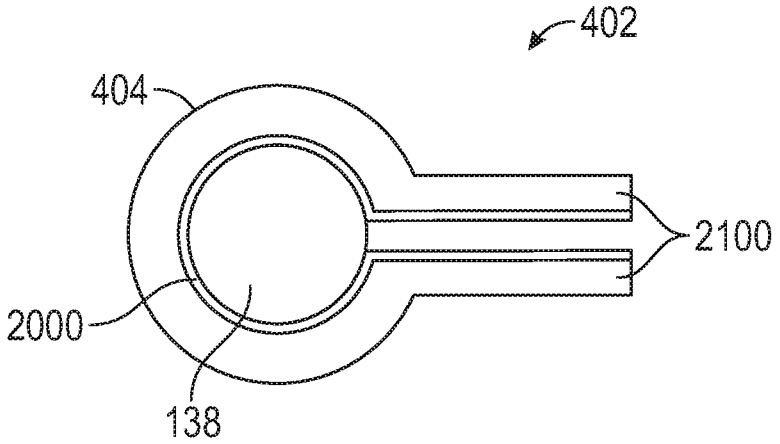

FIG. 23

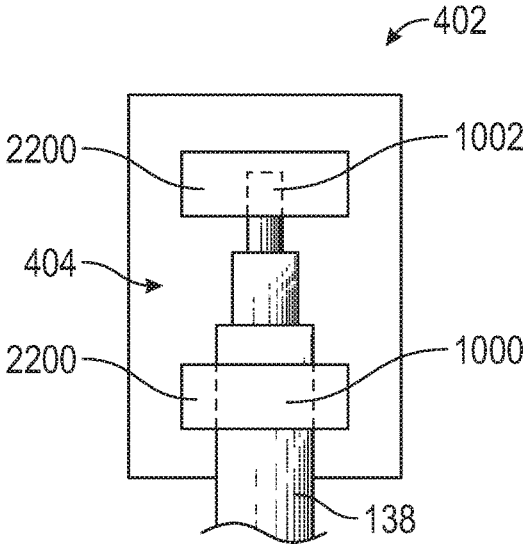

FIG. 24

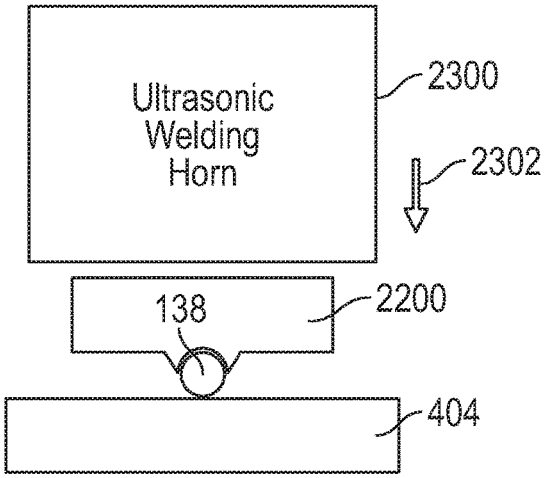

FIG. 25

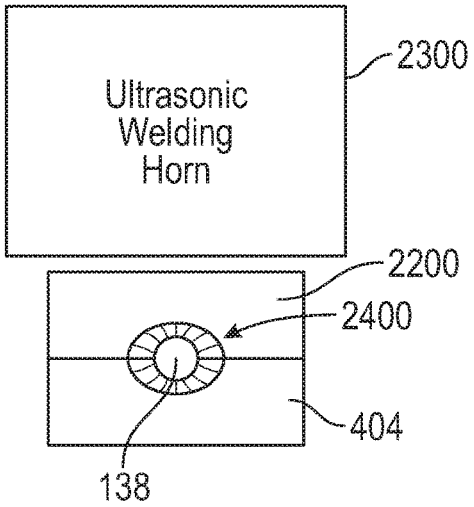

FIG. 26

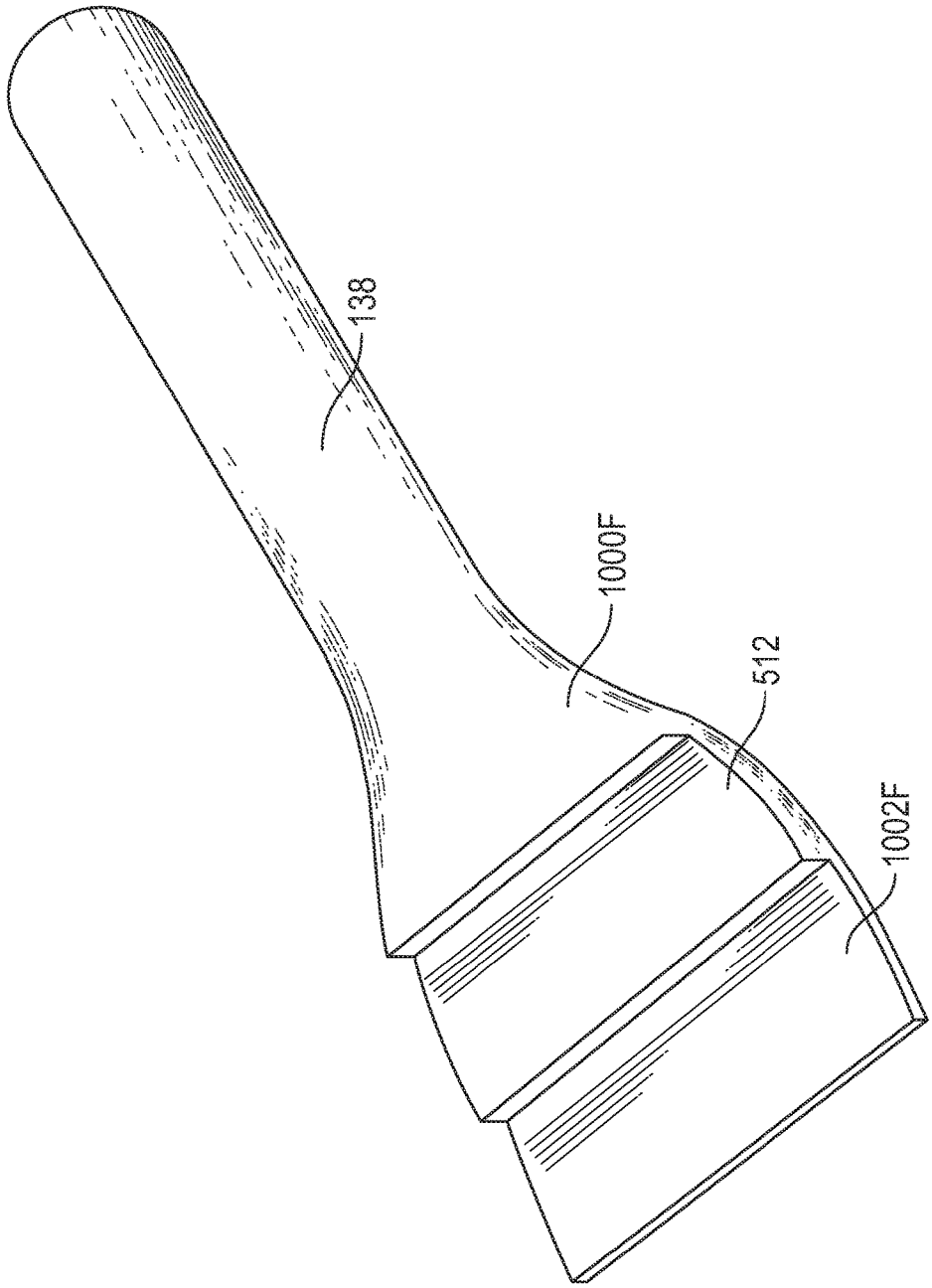

FIG. 27

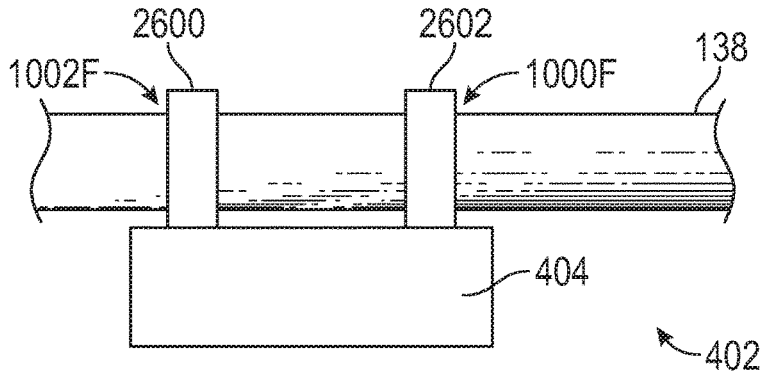

FIG. 28

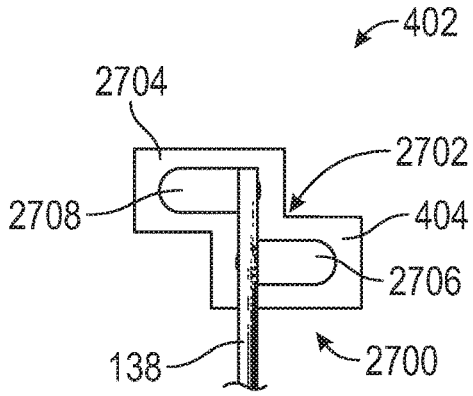

FIG. 29

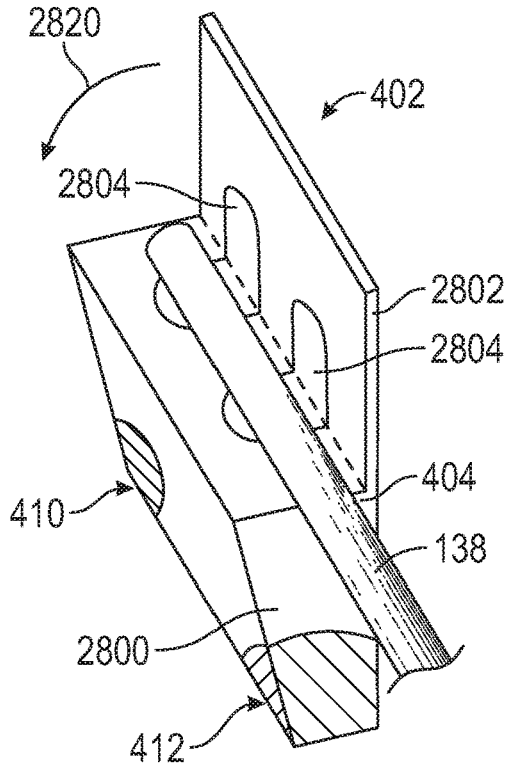

FIG. 30

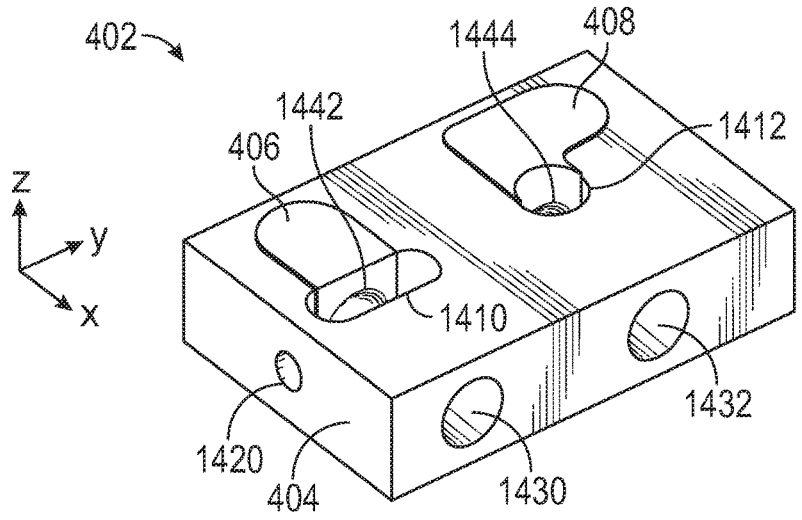

FIG. 31A

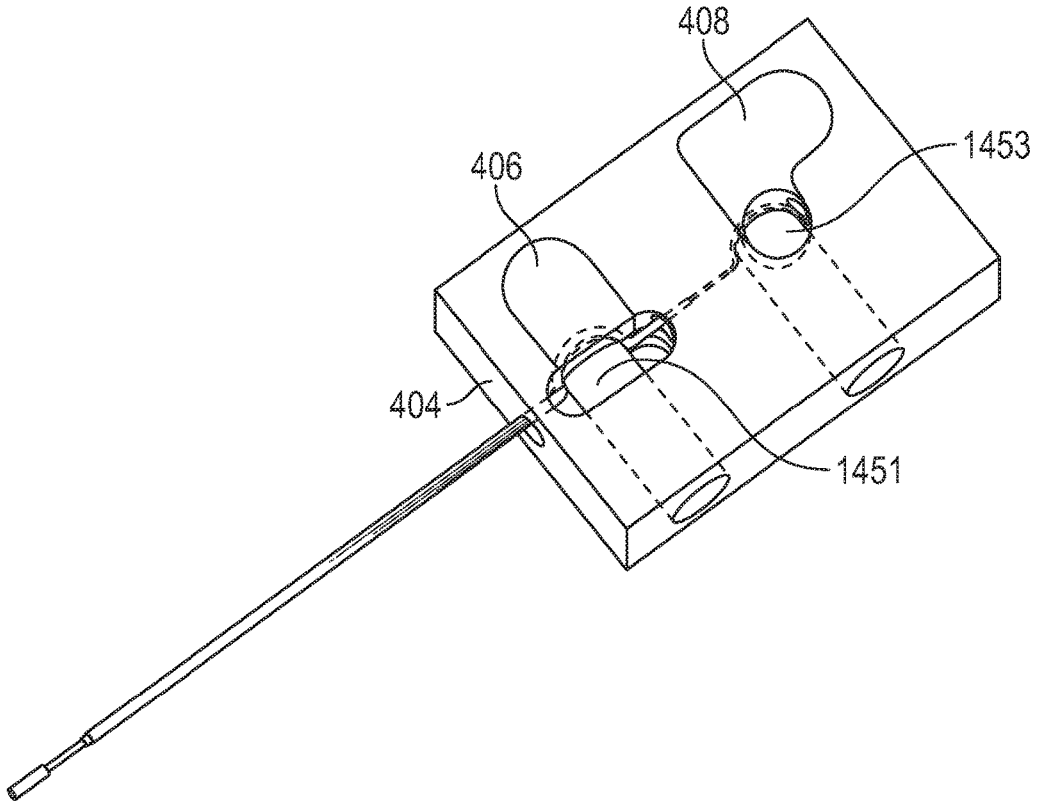

FIG. 31B

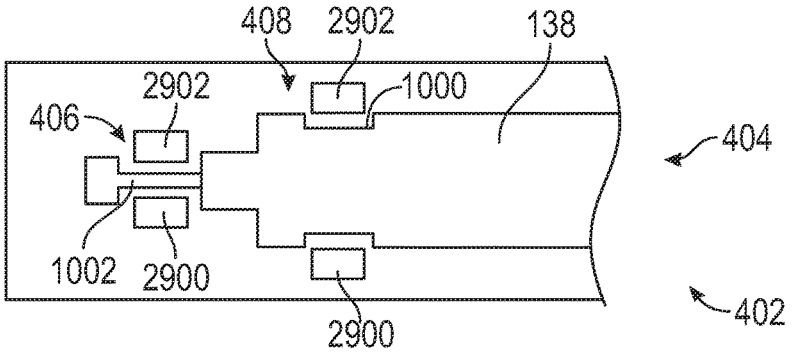

FIG. 32

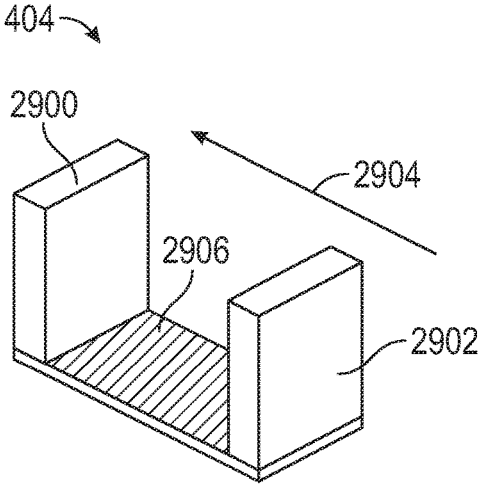

FIG. 33

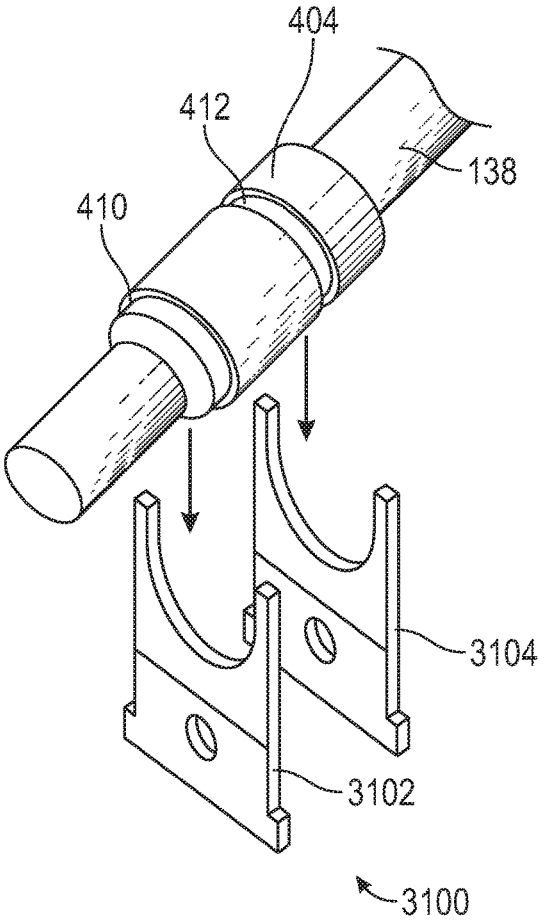

FIG. 34

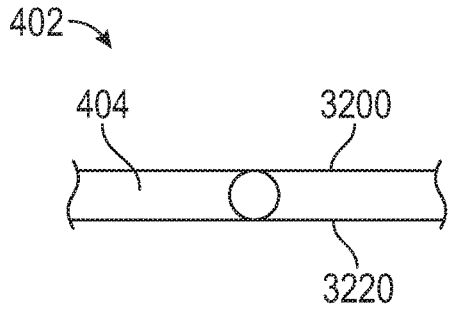

FIG. 35A

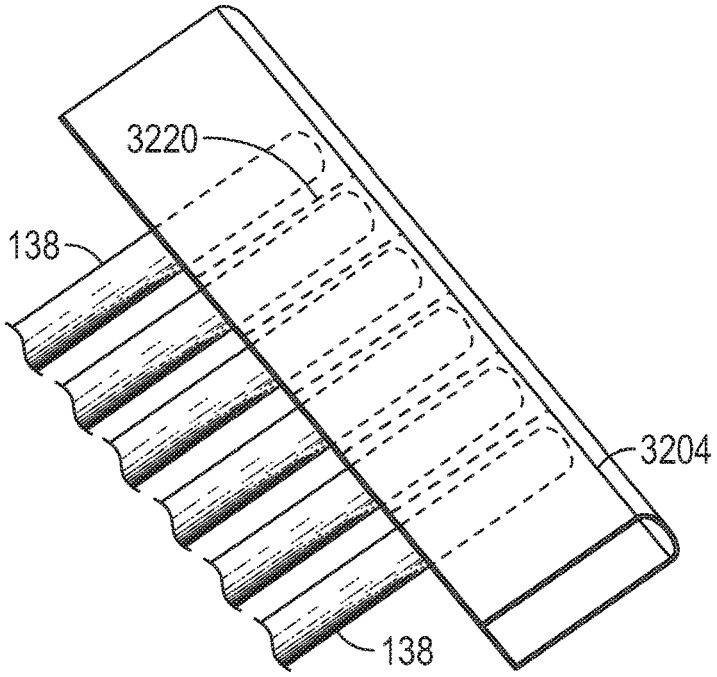

FIG. 35B

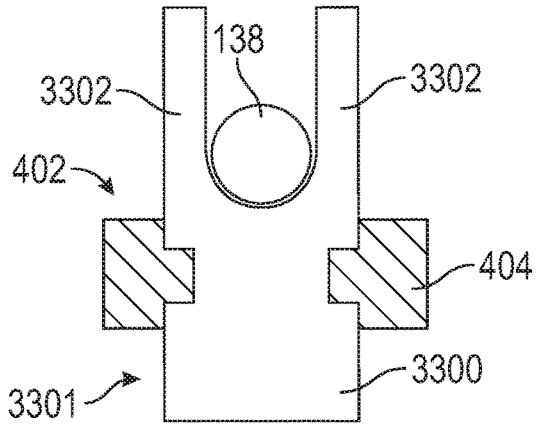

FIG. 36

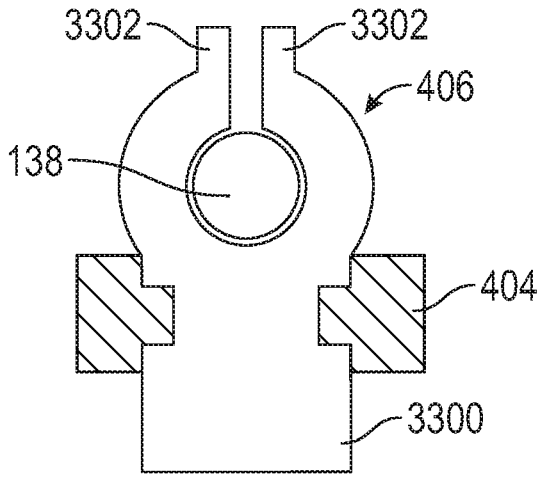

FIG. 37

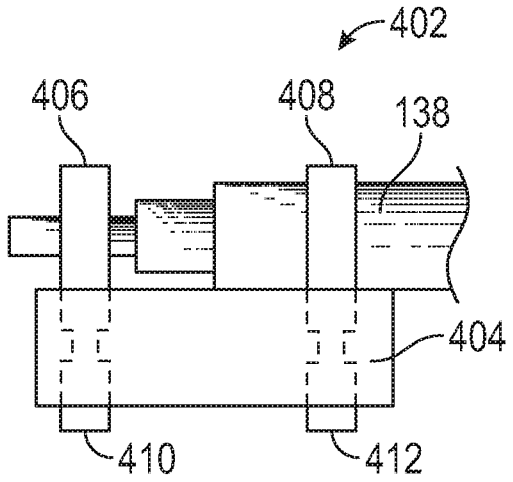

FIG. 38

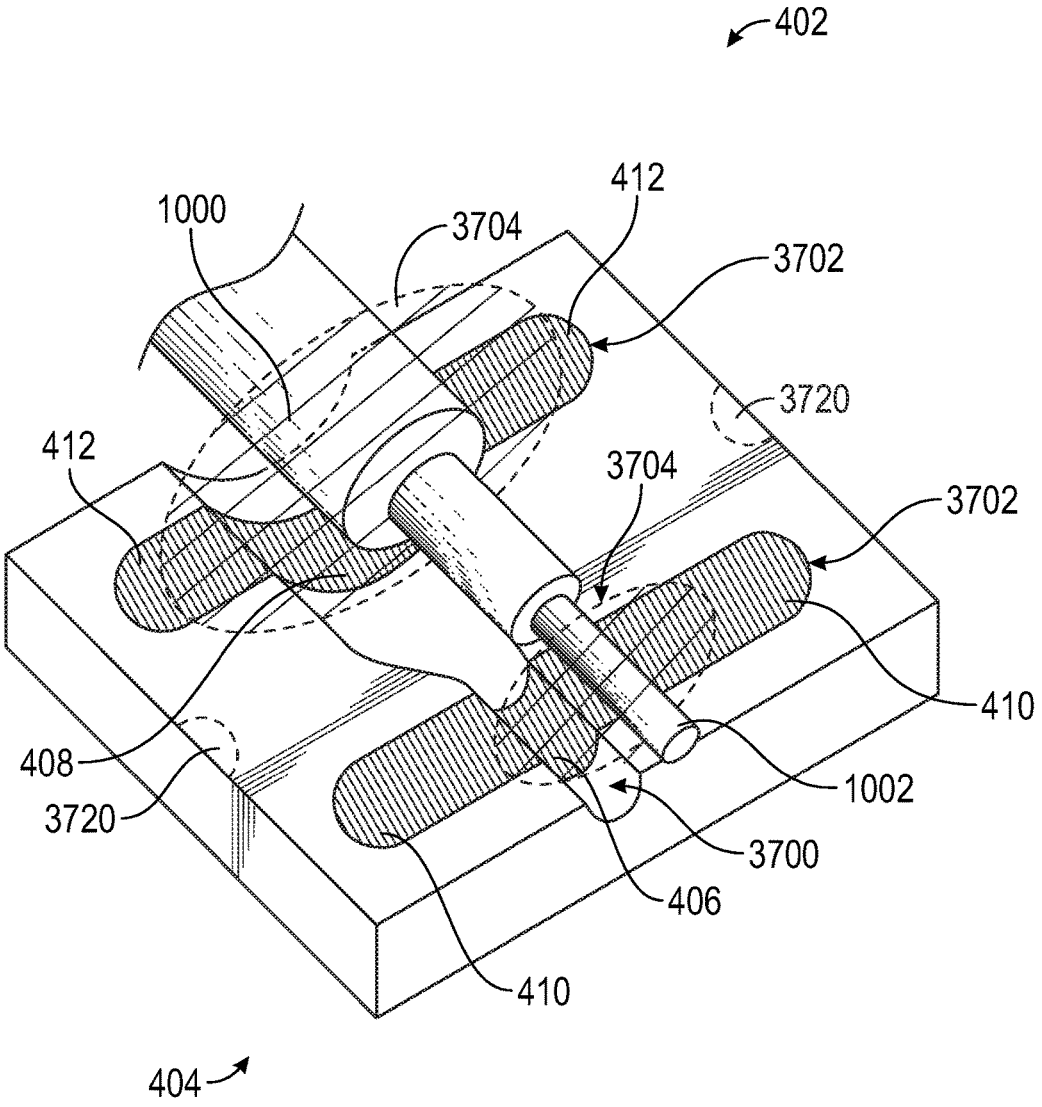
402
412
1000
3704
3702
3720
412
3704
3702
410
408
1002
3720
3700
406
410
404

FIG. 40

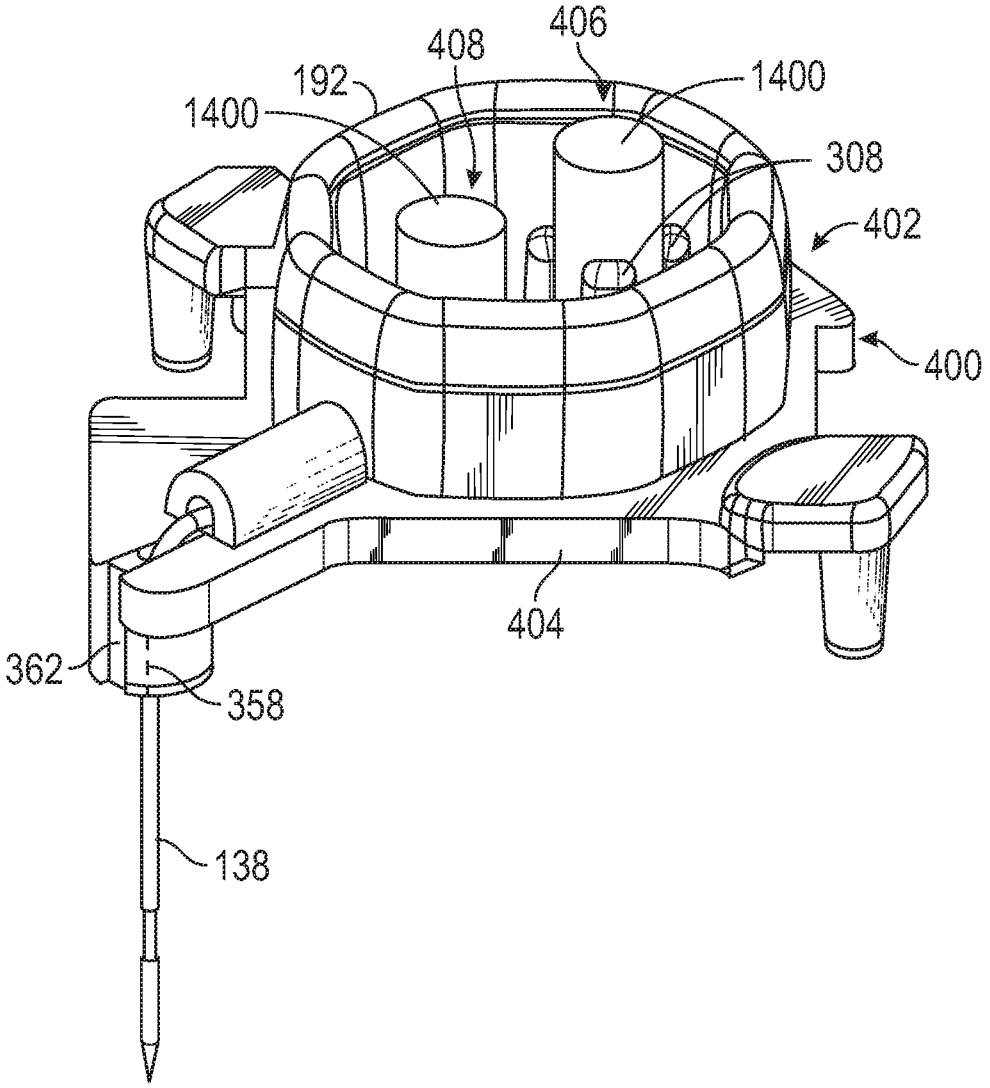

FIG. 39

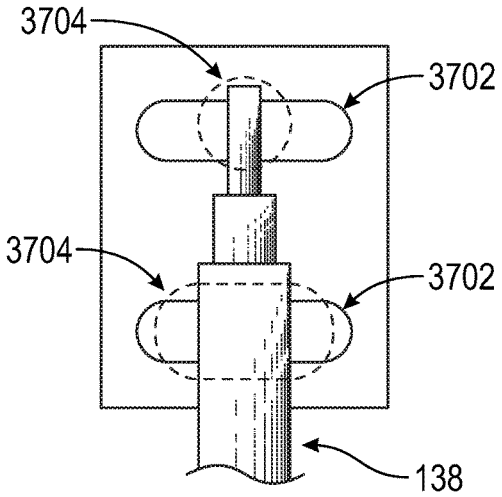

FIG. 41

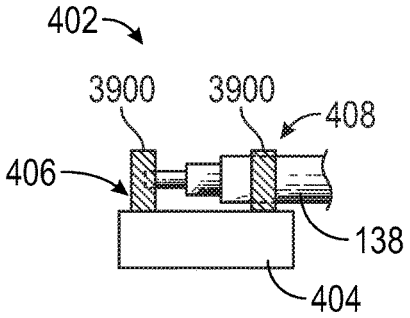

FIG. 42

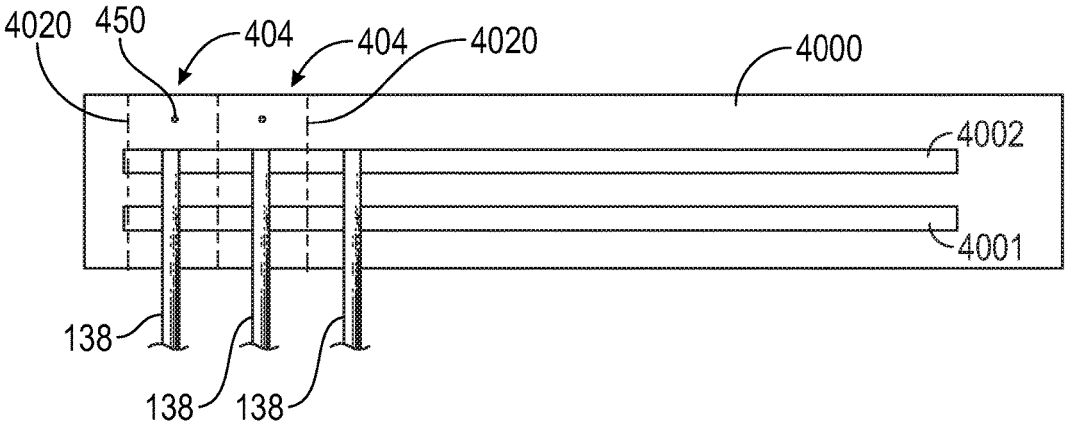

FIG. 43

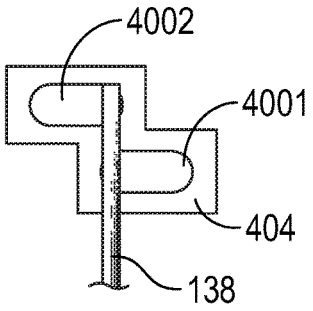

FIG. 44

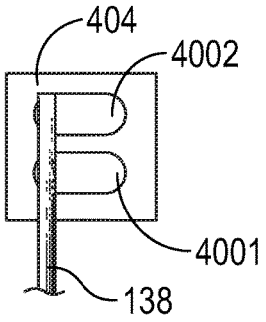

FIG. 45

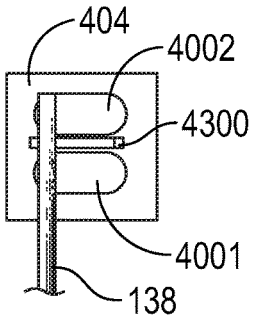

FIG. 46

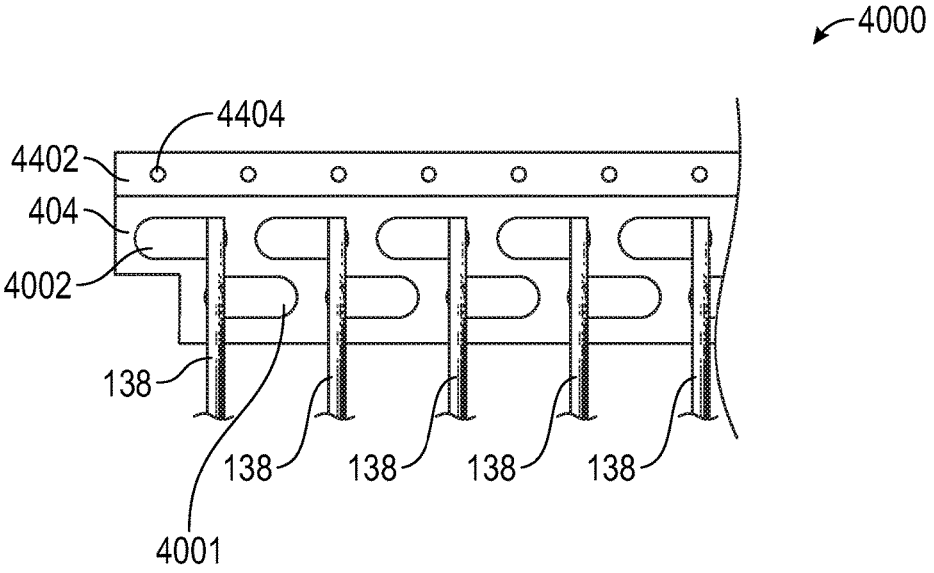

FIG. 47A

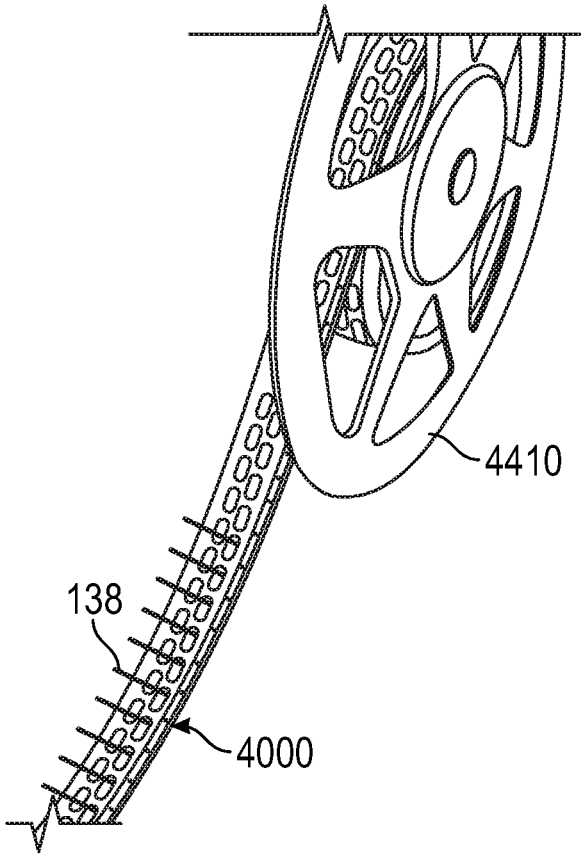

FIG. 47B

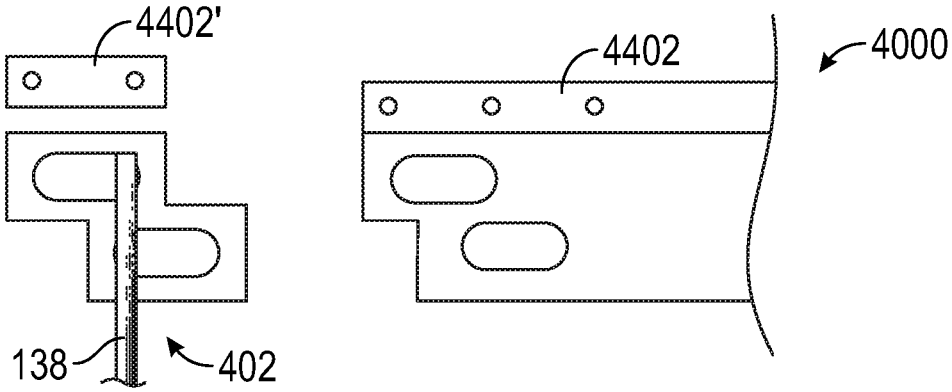

FIG. 48

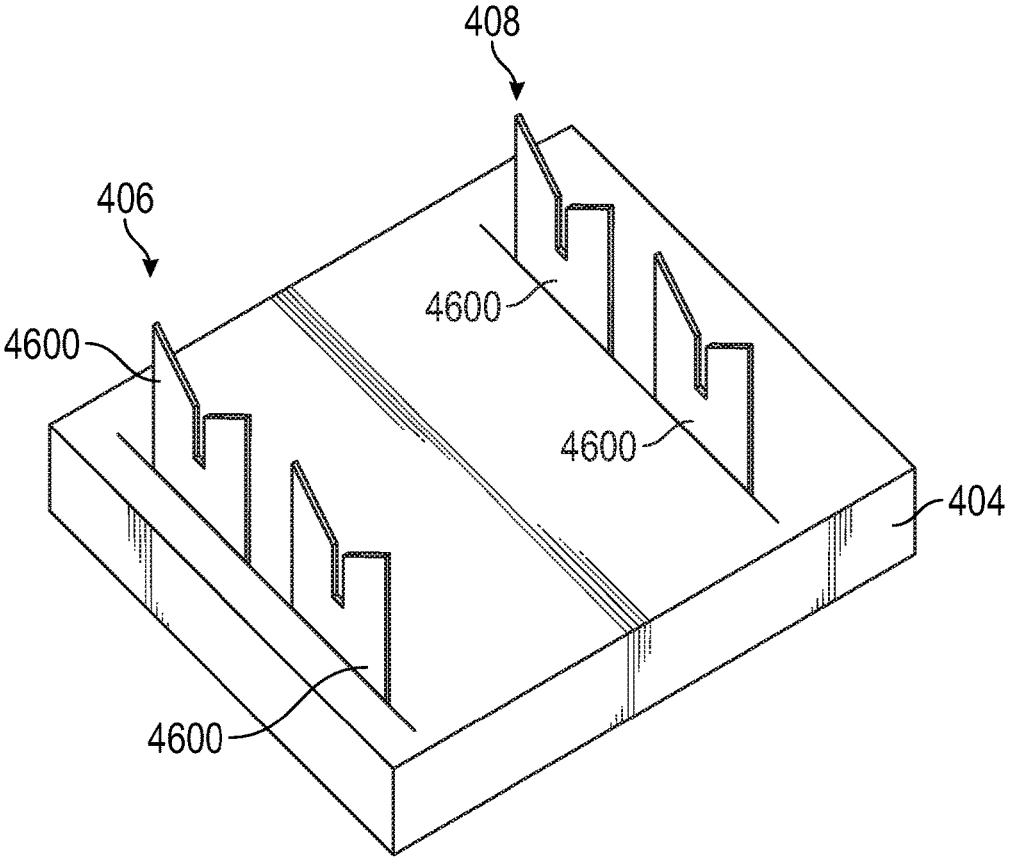

FIG. 49

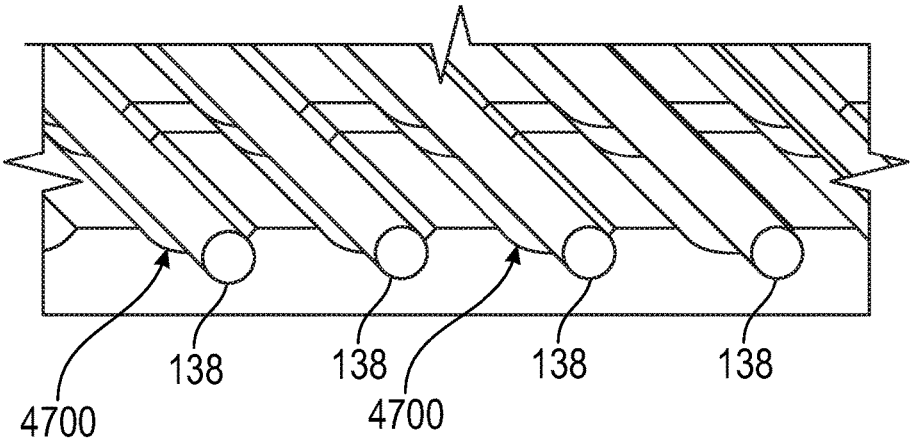

FIG. 50

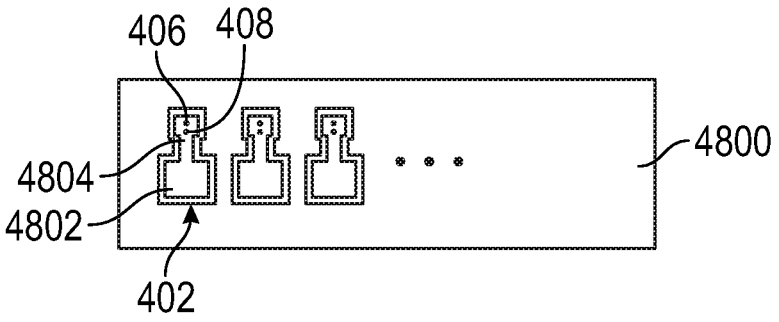

FIG. 51A

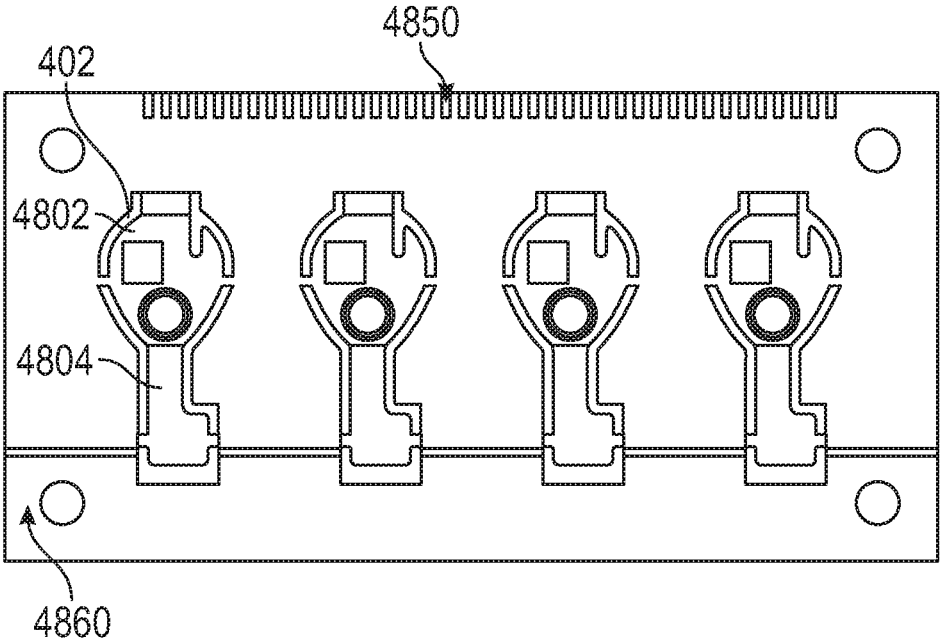

FIG. 51B

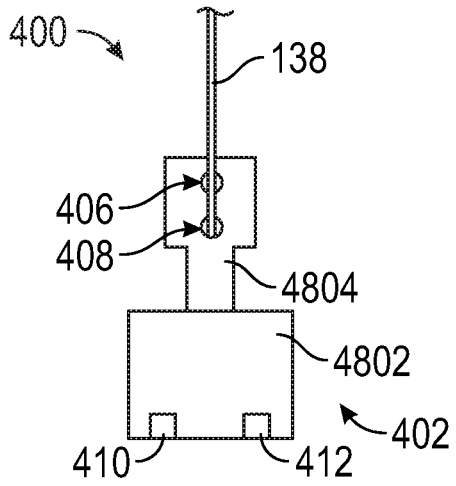

FIG. 52A

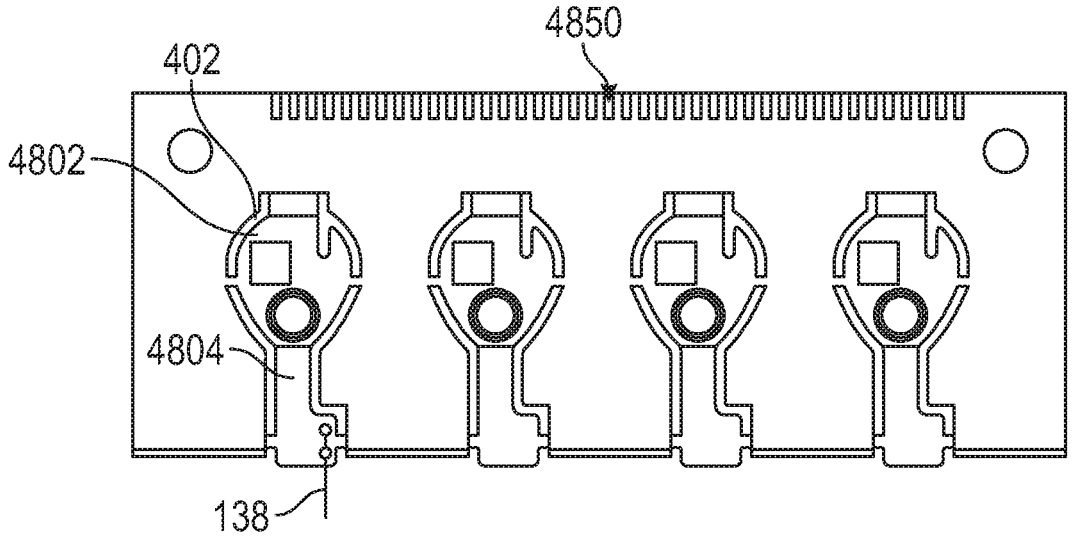

FIG. 52B

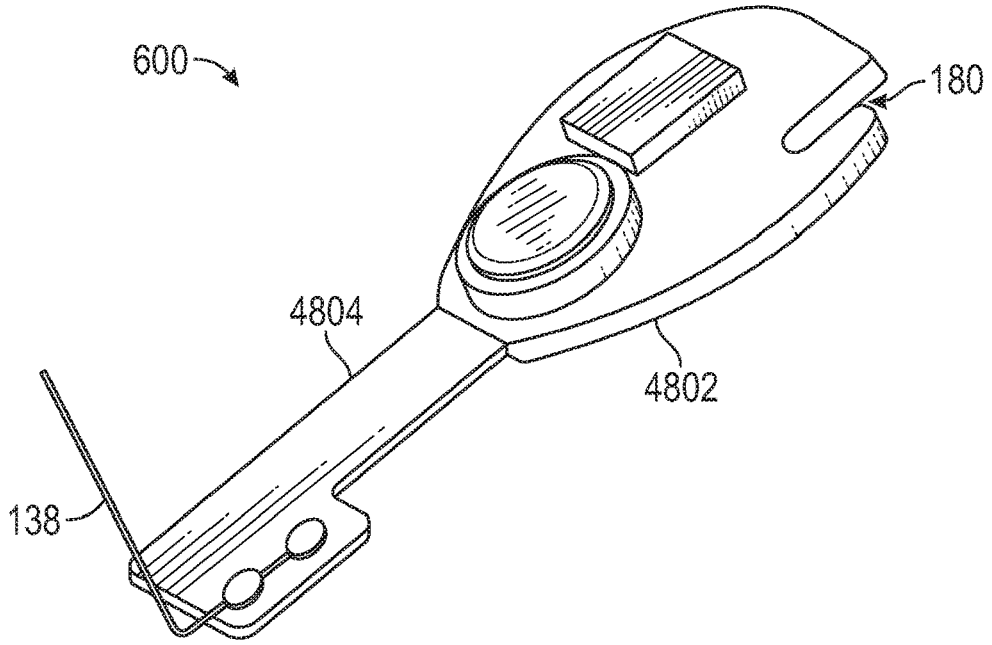

FIG. 53A

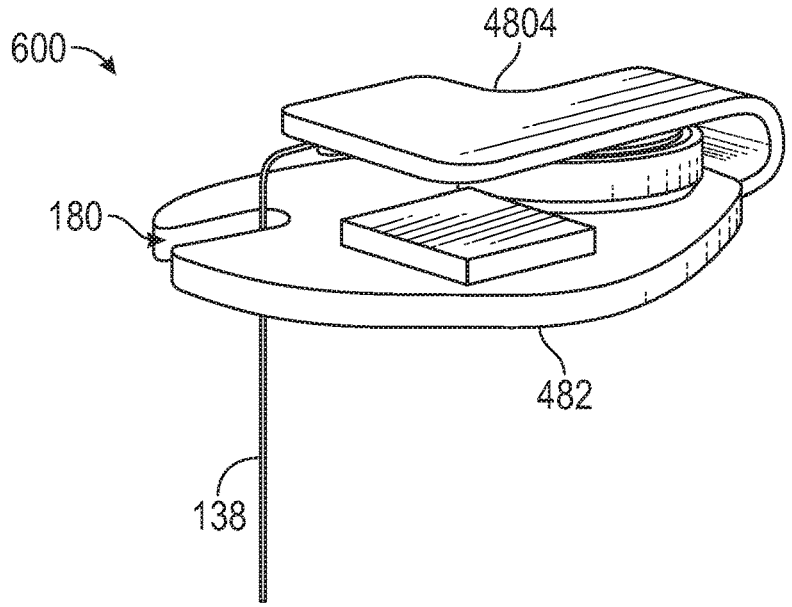

FIG. 53B

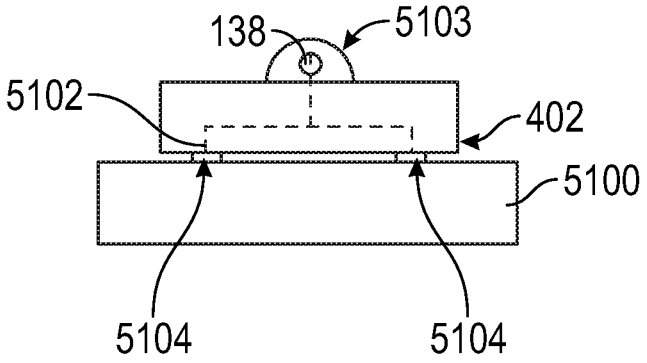

FIG. 54

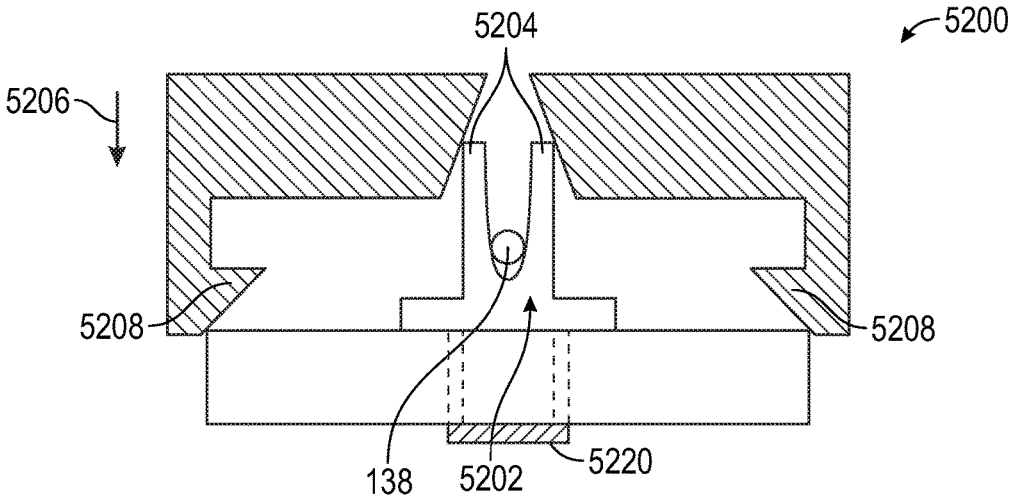
5204
5200
5206
5208
5208
138
5202
5220

FIG. 55

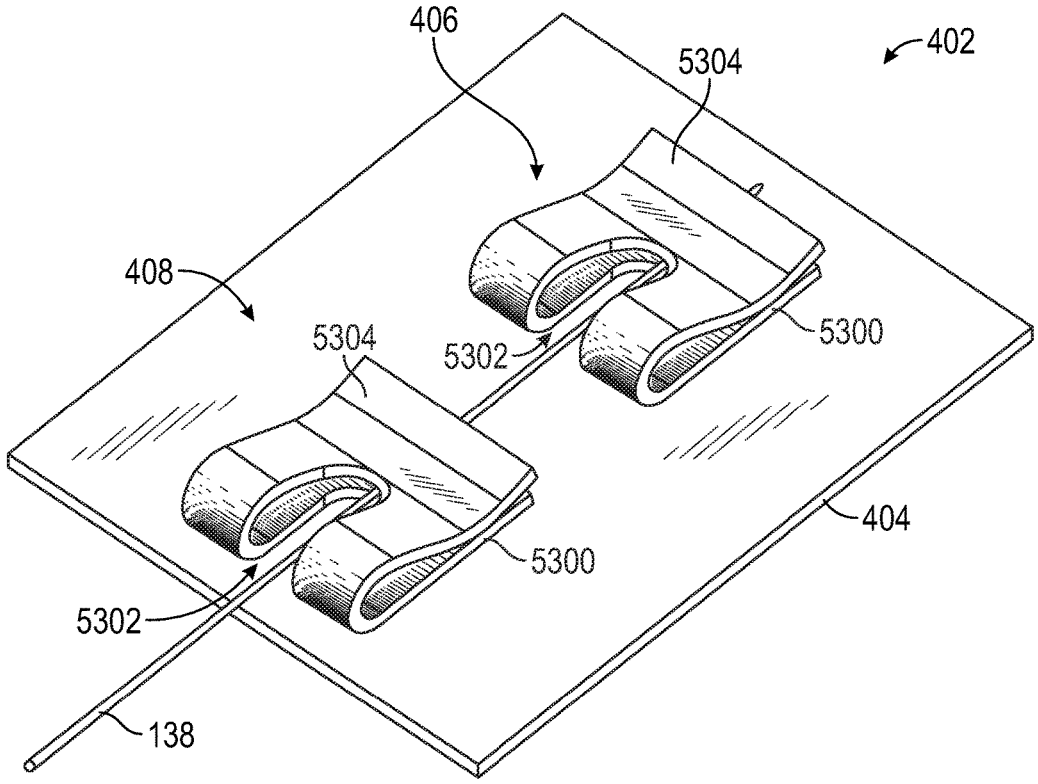
406
402
5304
408
5304
5302
5300
404
5300
5302
138

FIG. 56

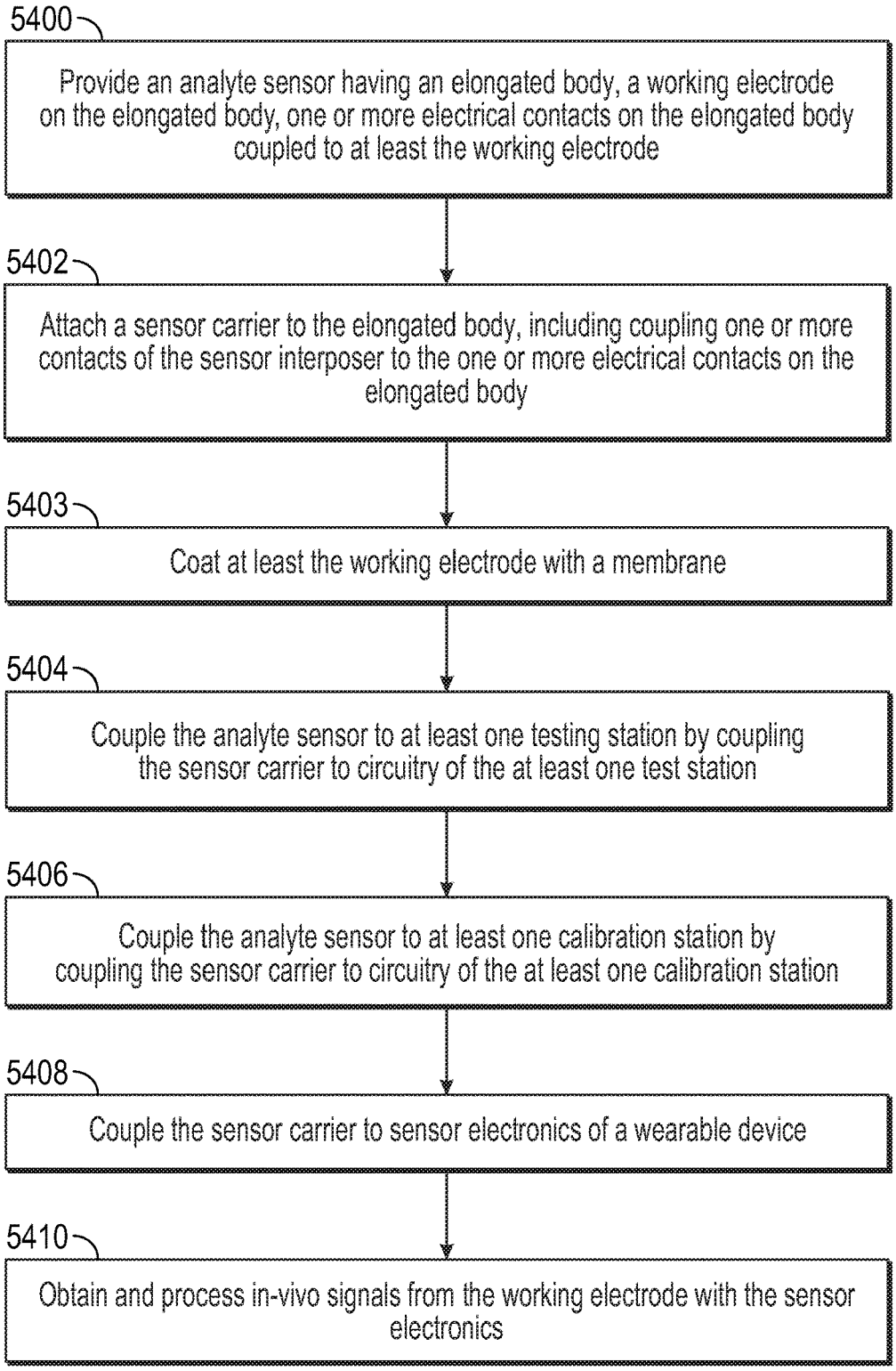
5400
Provide an analyte sensor having an elongated body, a working electrode on the elongated body, one or more electrical contacts on the elongated body coupled to at least the working electrode
5402
Attach a sensor carrier to the elongated body, including coupling one or more contacts of the sensor interposer to the one or more electrical contacts on the elongated body
5403
Coat at least the working electrode with a membrane
5404
Couple the analyte sensor to at least one testing station by coupling the sensor carrier to circuitry of the at least one test station
5406
Couple the analyte sensor to at least one calibration station by coupling the sensor carrier to circuitry of the at least one calibration station
5408
Couple the sensor carrier to sensor electronics of a wearable device
5410
Obtain and process in-vivo signals from the working electrode with the sensor electronics

FIG. 57

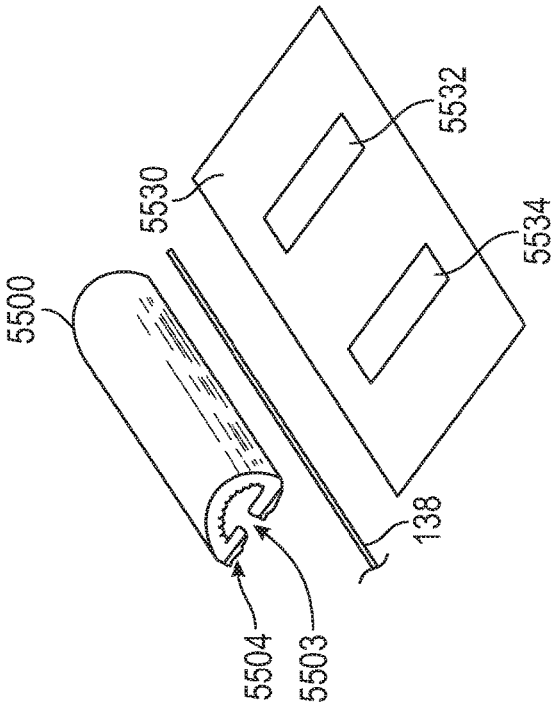

FIG. 59

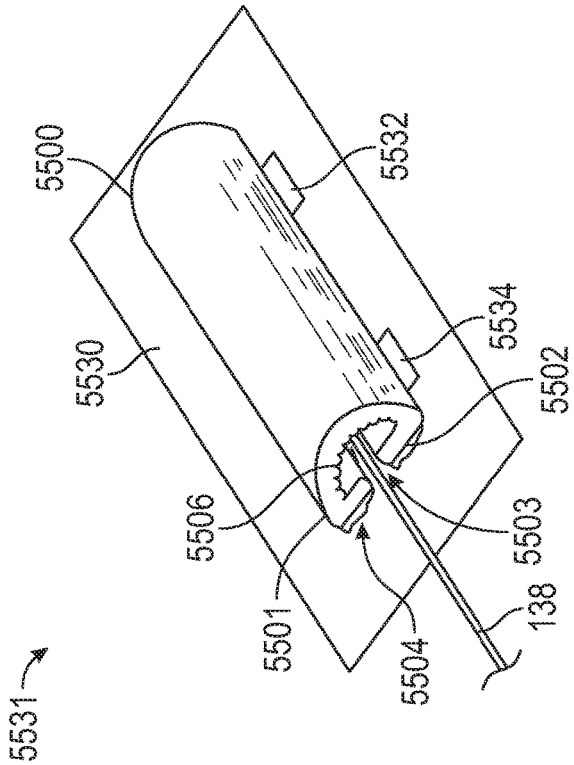

FIG. 58

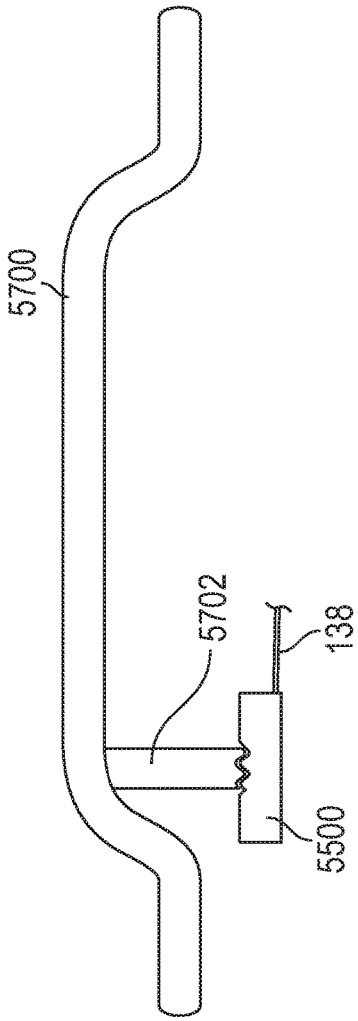

FIG. 60

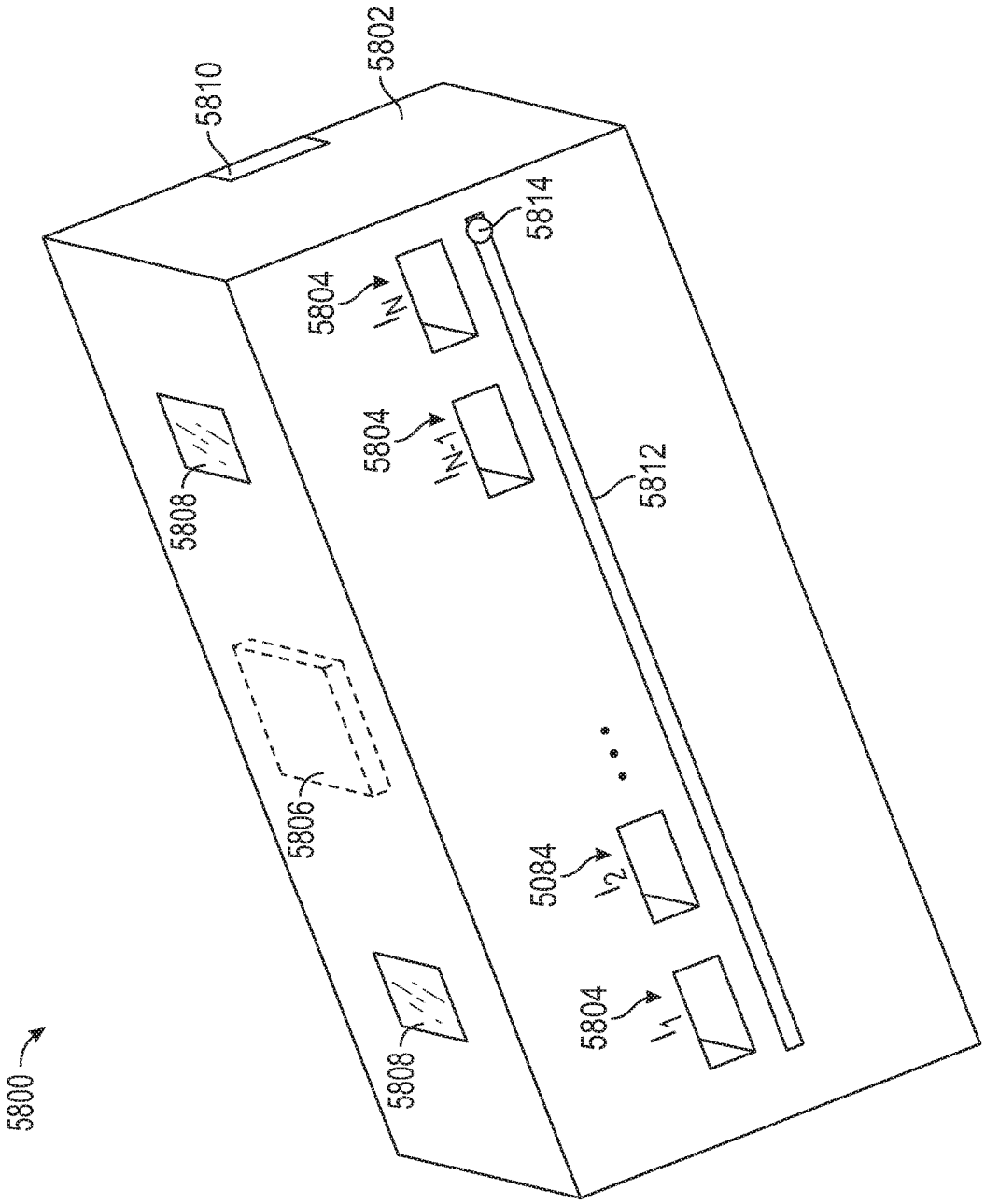
5800
5810
5802
5814
5804
I_N
5804
I_{N-1}
5808
5812
5806
5084
I_2
5808
5804
I_1

FIG. 61

PRE-CONNECTED ANALYTE SENSORS

INCORPORATION BY REFERENCE TO RELATED APPLICATIONS

[0001] Any and all priority claims identified in the Application Data Sheet, or any correction thereto, are hereby incorporated by reference under 37 CFR 1.57. This application is a continuation of U.S. application Ser. No. 16/167,976, filed Oct. 23, 2018, which claims the benefit of U.S. Provisional Application No. 62/576,560, filed on Oct. 24, 2017. Each of the aforementioned applications is incorporated by reference herein in its entirety, and each is hereby expressly made a part of this specification.

TECHNICAL FIELD

[0002] The present disclosure generally relates to sensors and, more particularly, to analyte sensors such as continuous analyte sensors.

BACKGROUND

[0003] Diabetes mellitus is a disorder in which the pancreas cannot create sufficient insulin (Type I or insulin dependent) and/or in which insulin is not effective (Type 2 or non-insulin dependent). In the diabetic state, the victim suffers from high blood sugar, which can cause an array of physiological derangements associated with the deterioration of small blood vessels, for example, kidney failure, skin ulcers, or bleeding into the vitreous of the eye. A hypoglycemic reaction (low blood sugar) can be induced by an inadvertent overdose of insulin, or after a normal dose of insulin or glucose-lowering agent accompanied by extraordinary exercise or insufficient food intake.

[0004] Conventionally, a person with diabetes carries a self-monitoring blood glucose (SMBG) monitor, which typically requires uncomfortable finger pricking methods. Due to the lack of comfort and convenience, a person with diabetes normally only measures his or her glucose levels two to four times per day. Unfortunately, such time intervals are spread so far apart that the person with diabetes likely finds out too late of a hyperglycemic or hypoglycemic condition, sometimes incurring dangerous side effects. Glucose levels may be alternatively monitored continuously by a sensor system including an on-skin sensor assembly. The sensor system may have a wireless transmitter which transmits measurement data to a receiver which can process and display information based on the measurements.

[0005] This Background is provided to introduce a brief context for the Summary and Detailed Description that follow. This Background is not intended to be an aid in determining the scope of the claimed subject matter nor be viewed as limiting the claimed subject matter to implementations that solve any or all of the disadvantages or problems presented above.

SUMMARY

[0006] There are various steps in the manufacturing process of an analyte sensor such as a continuous analyte sensor for which temporary mechanical and electrical connections between the sensor and manufacturing equipment such as testing and/or calibration equipment are used. These connections are facilitated by accurate placement and alignment of the sensor to mechanical and electrical interfaces of the testing and/or calibration equipment. A device such as an "interconnect", "interposer" or "sensor carrier" can be attached to an elongated body of the sensor, as described hereinafter, to assist with handling, and both temporary and permanent, electrical and mechanical connections. A sensor carrier (also referred to as a "sensor interposer") may also include features for tracking, data storage, and sealing sensor electrodes, from each other and from the environment. Without limiting the scope of the present embodiments as expressed by the claims that follow, their more prominent features now will be discussed briefly. After considering this discussion, and particularly after reading the section entitled "Detailed Description," one will understand how the features of the present embodiments provide the advantages described herein.

[0007] In accordance with a first aspect, a method of manufacturing a sensor is provided. The method includes providing an analyte sensor having an elongated body, a first electrode, a second electrode coaxially located within the first electrode, and at least two electrical contacts longitudinally aligned and spaced along a longitudinal axis of the sensor. The method includes attaching a sensor carrier to the analyte sensor, the sensor carrier including an intermediate body, a first conductive portion disposed on the intermediate body, the first conductive portion in electrical communication with the first electrode, a second conductive portion disposed on the intermediate body, the second conductive portion in electrical communication with the second electrode. The first and second conductive portions form a connection portion configured to establish electrical connection between the sensor and a separate device.

[0008] In a generally applicable embodiment (i.e. independently combinable with any of the aspects or embodiments identified herein) of the first aspect, the method further includes coupling an outer layer to the intermediate body. The outer layer includes an identifier. The outer layer, the sensor, and the intermediate body can form a laminated configuration. The identifier can be a QR code sheet. The identifier can include any of an optical identifier, a radio-frequency identifier, or a memory-encoded identifier. The identifier can identify the analyte sensor, calibration data for the analyte sensor, or a history of the analyte sensor.

[0009] In a generally applicable embodiment (i.e. independently combinable with any of the aspects or embodiments identified herein) of the first aspect, the method further includes coating the sensor with a membrane after attaching the sensor to the sensor carrier.

[0010] In a generally applicable embodiment (i.e. independently combinable with any of the aspects or embodiments identified herein) of the first aspect, the first conductive portion and the second conductive portion are traces. The traces can extend from a distal position of the sensor carrier and terminate at a proximal end of the sensor carrier. The traces can form exposed contact surfaces in the connection portion. The first and second conductive portions can be embedded into the intermediate body.

[0011] In a generally applicable embodiment (i.e. independently combinable with any of the aspects or embodiments identified herein) of the first aspect, the first conductive portion and the second conductive portion are solder welds. The solder welds can attach the sensor to the sensor carrier.

[0012] In a generally applicable embodiment (i.e. independently combinable with any of the aspects or embodiments identified herein) of the first aspect, the first conduc-

tive portion and the second conductive portion are conductive tapes. The conductive tapes can attach the sensor to the sensor carrier.

[0013] In a generally applicable embodiment (i.e. independently combinable with any of the aspects or embodiments identified herein) of the first aspect, the connection portion is configured to mechanically mate with the separate device.

[0014] In a generally applicable embodiment (i.e. independently combinable with any of the aspects or embodiments identified herein) of the first aspect, the separate device is an electronics unit configured to measure analyte data.

[0015] In a generally applicable embodiment (i.e. independently combinable with any of the aspects or embodiments identified herein) of the first aspect, the separate device is a component of a manufacturing station. The method can further include performing at least one of a potentiostat measurement, a dipping process, a curing process, a calibration process, or a sensitivity measurement while the electrical connection is established between the sensor and the manufacturing station. The method can further include de-establishing electrical connection between the sensor and the calibration station. The method can further include establishing electrical connection between the sensor and at least one testing station via the connection portion of the sensor carrier.

[0016] In a generally applicable embodiment (i.e. independently combinable with any of the aspects or embodiments identified herein) of the first aspect, the intermediate body further includes a datum structure that controls a position and spatial orientation of the analyte sensor relative to a substrate of the intermediate body. The datum structure can include a flexible portion of the substrate that is folded over at least a portion of the analyte sensor.

[0017] In a generally applicable embodiment (i.e. independently combinable with any of the aspects or embodiments identified herein) of the first aspect, the first conductive portion and/or the second conductive portion comprise at least one of a coil spring, a leaf spring, or a conductive elastomer.

[0018] In accordance with a second aspect, an apparatus is provided that includes an analyte sensor having an elongated body, a first electrode in electrical communication with a first conductive contact, a second electrode in electrical communication with a second conductive contact. The sensor carrier can be attached to the analyte sensor. The sensor carrier can include an intermediate body, a first conductive portion disposed on the intermediate body, the first conductive portion in electrical communication with the first conductive contact, and a second conductive portion disposed on the intermediate body, the second conductive portion in electrical communication with the second conductive contact. The first and second conductive portions can form a connection portion configured to establish electrical communication between the first and second conductive contacts and a separate device.

[0019] In a generally applicable embodiment (i.e. independently combinable with any of the aspects or embodiments identified herein) of the second aspect, the apparatus further includes an identifier coupled to the intermediate body. The identifier, the sensor, and the intermediate body can form a laminated configuration. The identifier can be a QR code sheet. The identifier can be any of an optical identifier, a radio-frequency identifier, or a memory-encoded identifier. The identifier can be configured to identify any of the analyte sensor, calibration data for the analyte sensor, and a history of the analyte sensor.

[0020] In a generally applicable embodiment (i.e. independently combinable with any of the aspects or embodiments identified herein) of the second aspect, the first conductive portion and the second conductive portion are traces. The traces can form exposed contact surfaces in the connection portion. The first and second conductive portions can be at least partially embedded into the intermediate body.

[0021] In a generally applicable embodiment (i.e. independently combinable with any of the aspects or embodiments identified herein) of the second aspect, the first conductive portion and the second conductive portion include at least one of a solder weld, a conductive tape, a coil spring, a leaf spring, or a conductive elastomer.

[0022] In a generally applicable embodiment (i.e. independently combinable with any of the aspects or embodiments identified herein) of the second aspect, the connection portion is configured to mechanically mate with the separate device.

[0023] In a generally applicable embodiment (i.e. independently combinable with any of the aspects or embodiments identified herein) of the second aspect, the separate device is an electronics unit configured to measure analyte data.

[0024] In a generally applicable embodiment (i.e. independently combinable with any of the aspects or embodiments identified herein) of the second aspect, the separate device is a component of a manufacturing station. At least one of a potentiostat measurement, a dipping process, a curing process, a calibration process, or a sensitivity measurement can be configured to be performed while the electrical connection is established between the sensor and the manufacturing station. The manufacturing station can comprise a calibration station configured to de-establish electrical connection between the sensor and the calibration station and establish electrical connection between the sensor and at least one testing station via the connection portion of the sensor carrier.

[0025] In a generally applicable embodiment (i.e. independently combinable with any of the aspects or embodiments identified herein) of the second aspect, the intermediate body further comprises a datum structure configured to control a position and spatial orientation of the analyte sensor relative to a substrate of the intermediate body.

[0026] In a generally applicable embodiment (i.e. independently combinable with any of the aspects or embodiments identified herein) of the second aspect, the first electrode may be positioned coaxially within the second electrode, and the first electrical contact and the second electrical contact may be longitudinally aligned and spaced along a longitudinal axis of the sensor.

[0027] In a generally applicable embodiment (i.e. independently combinable with any of the aspects or embodiments identified herein) of the second aspect, the first electrode and the second electrode may be affixed to a flexible planar substrate. In addition, the first electrical contact and the second electrical contact may be affixed to the flexible planar substrate.

[0028] In a generally applicable embodiment (i.e. independently combinable with any of the aspects or embodi-

ments identified herein) of the second aspect, the first conductive contact and the second conductive contact are affixed to the intermediate body with conductive adhesive.

[0029] In a generally applicable embodiment (i.e. independently combinable with any of the aspects or embodiments identified herein) of the second aspect, the first conductive contact and the second conductive contact are affixed to the intermediate body with anisotropic conductive film.

[0030] In accordance with a third aspect, an array of pre-connected analyte sensors is provided. The array includes a substrate, a first plurality of electrical contacts disposed on the substrate, a second plurality of electrical contacts disposed on the substrate, and a plurality of analyte sensors disposed on the substrate. Each of the plurality of analyte sensors includes a first sensor electrical contact coupled to a corresponding one of the first plurality of electrical contacts on the substrate, and a second sensor electrical contact coupled to a corresponding one of the second plurality of electrical contacts on the substrate. The array may comprise one or more strips.

[0031] In a generally applicable embodiment (i.e. independently combinable with any of the aspects or embodiments identified herein) of the third aspect, the first plurality of electrical contacts are aligned along the substrate. The first plurality of electrical contacts can be formed from an exposed contact surface.

[0032] In a generally applicable embodiment (i.e. independently combinable with any of the aspects or embodiments identified herein) of the third aspect, the second plurality of electrical contacts are aligned along the substrate. The second plurality of electrical contacts can be formed from an exposed contact surface.

[0033] In a generally applicable embodiment (i.e. independently combinable with any of the aspects or embodiments identified herein) of the third aspect, the first and second plurality of electrical contacts are configured to connect with a separate device. The separate device can be a component of a manufacturing station.

[0034] In a generally applicable embodiment (i.e. independently combinable with any of the aspects or embodiments identified herein) of the third aspect, the substrate includes at least one singulation feature configured to facilitate singulation of the substrate into a plurality of sensor carriers, wherein each of the plurality of sensor carriers is attached to a corresponding one of the analyte sensors.

[0035] In a generally applicable embodiment (i.e. independently combinable with any of the aspects or embodiments identified herein) of the third aspect, the strip further includes a plurality of identifiers disposed on the substrate.

[0036] In a generally applicable embodiment (i.e. independently combinable with any of the aspects or embodiments identified herein) of the third aspect, the substrate includes an elongated dimension, wherein the plurality of analyte sensors extend beyond an edge of the substrate in a direction orthogonal to the elongated dimension. The strip can further include a feed-guide strip that runs along an opposing edge of the substrate in the elongated dimension. The substrate can further include a flexible substrate configured to be rolled onto a reel. The feed-guide strip can be removable from the substrate.

[0037] In a generally applicable embodiment (i.e. independently combinable with any of the aspects or embodiments identified herein) of the third aspect, the substrate comprises a molded thermoplastic having a plurality of datum features that control a position and orientation of the plurality of analyte sensors, and wherein the a first plurality of electrical contacts and the second plurality of electrical contacts each comprise embedded conductive traces in the molded thermoplastic.

[0038] In a generally applicable embodiment (i.e. independently combinable with any of the aspects or embodiments identified herein) of the third aspect, the strip further includes a first datum structure coupled to the strip, the first datum structure configured to position the plurality of analyte sensors. The first datum structure includes at least one singulation feature configured to facilitate singulation of the first datum structure into a plurality of second datum structures, wherein each of the plurality of second datum structures is coupled to a corresponding one of a plurality of sensor carriers formed by the substrate.

[0039] In a generally applicable embodiment (i.e. independently combinable with any of the aspects or embodiments identified herein) of the third aspect, the strip further includes a carrier having processing circuitry configured to perform at least potentiostat measurements for the plurality of analyte sensors. The strip can further include communications circuitry operable by the processing circuitry to send and receive data associated with each of the analyte sensors together with an identifier for that analyte sensor.

[0040] In accordance with a fourth aspect, a method is provided. The method includes providing a pre-connected analyte sensor, the pre-connected analyte sensor comprising an intermediate body, an analyte sensor permanently attached to the intermediate body, and an identifier coupled to the intermediate body. The method includes communicatively coupling the analyte sensor to a processing circuitry of a manufacturing station by coupling the intermediate body to a corresponding feature of the manufacturing station. The method includes operating the processing circuitry of the manufacturing station to communicate with the pre-connected analyte sensor.

[0041] In a generally applicable embodiment (i.e. independently combinable with any of the aspects or embodiments identified herein) of the fourth aspect, operating the processing circuitry includes obtaining a signal from the analyte sensor via the connection portion. Operating the processing circuitry can include operating an optical, infrared, or radio-frequency reader of the manufacturing station to obtain the identifier.

[0042] In a generally applicable embodiment (i.e. independently combinable with any of the aspects or embodiments identified herein) of the fourth aspect, the method further includes storing, with the processing circuitry of the manufacturing station and in connection with the identifier, sensor data corresponding to the signal. The identifier can identify any of the analyte sensor, calibration data for the analyte sensor, and a history of the analyte sensor.

[0043] In a generally applicable embodiment (i.e. independently combinable with any of the aspects or embodiments identified herein) of the fourth aspect, the signal includes a glucose sensitivity signal.

[0044] In a generally applicable embodiment (i.e. independently combinable with any of the aspects or embodiments identified herein) of the fourth aspect, the method further includes removing the pre-connected analyte sensor from the manufacturing station and communicatively coupling the analyte sensor to processing circuitry of a wearable

device by mechanically coupling an anchoring feature of the intermediate body to a corresponding feature of a wearable device. The method can further include obtaining in vivo measurement data from the analyte sensor with the processing circuitry of the wearable device.

[0045] In a generally applicable embodiment (i.e. independently combinable with any of the aspects or embodiments identified herein) of the fourth aspect, the analyte sensor is permanently attached to the intermediate body with conductive adhesive.

[0046] In a generally applicable embodiment (i.e. independently combinable with any of the aspects or embodiments identified herein) of the fourth aspect, the analyte sensor is permanently attached to the intermediate body with anisotropic conductive film.

[0047] In accordance with a fifth aspect, a wearable device is provided. The wearable device comprises a housing and electronic circuitry configured to process analyte sensor signals. The electronic circuitry is enclosed within the housing. An analyte sensor has a distal portion positioned outside the housing. An intermediate body has an electrical connection to both a proximal portion of the analyte sensor and the electronics, wherein the electrical connection between the intermediate body and the proximal portion of the analyte sensor is external to the housing.

[0048] In generally applicable embodiments (i.e. independently combinable with any of the aspects or embodiments identified herein) of the fifth aspect the intermediate body may be positioned adjacent to an exterior surface of the housing. The device may include electrical contacts coupled to both the electronics and the intermediate body. The intermediate body may be electrically connected to the electrical contacts with conductive epoxy. The intermediate body is electrically connected to the electrical contacts with anisotropic conductive film. The intermediate body may be sealed. The electrical contacts may extend through the housing. The intermediate body may be positioned in a recess on the exterior surface of the housing. The electrical contacts may extend through the housing in the recess to electrically couple the intermediate body to the electronic circuitry enclosed within the housing. The intermediate body may be covered with a polymer in the recess.

[0049] In generally applicable embodiments (i.e. independently combinable with any of the aspects or embodiments identified herein) of the fifth aspect the analyte sensor is formed as an elongated body with a distal portion configured for percutaneous implantation in a subject and a proximal portion configured for electrically connecting to the intermediate body. The distal portion of the analyte sensor may extend away from an opening through the housing. The electronic circuitry may comprise a potentiostat and/or a wireless transmitter.

[0050] In accordance with a sixth aspect, a method of making a pre-connected analyte sensor is provided. The method comprises mechanically and electrically connecting a proximal portion of an elongated conductor to a conductive portion of an intermediate body, and after the connecting, coating a distal portion of the elongated conductor with a polymer membrane to form an analyte sensor having a working electrode region configured to support electrochemical reactions for analyte detection in the distal portion of the elongated conductor.

[0051] In generally applicable embodiments (i.e. independently combinable with any of the aspects or embodiments identified herein) of the sixth aspect, the method additionally comprises testing the analyte sensor, wherein the testing comprises electrically coupling the intermediate body to a testing station. The method may additionally comprise calibrating the analyte sensor, wherein the calibrating comprises electrically coupling the intermediate body to a testing station. The coating may comprise dip coating.

[0052] In generally applicable embodiments (i.e. independently combinable with any of the aspects or embodiments identified herein) of the sixth aspect, the intermediate body may be part of an array formed by a plurality of coupled intermediate bodies, wherein the method further comprises mechanically and electrically connecting a proximal portion of each of a plurality of elongated electrodes to a conductive portion of each intermediate body of the array. The coating may be performed in parallel on each distal portion of each of the plurality of elongated electrodes connected to the intermediate bodies of the array. The method may comprise singulating one or more of the intermediate bodies of the array after the coating.

[0053] In generally applicable embodiments (i.e. independently combinable with any of the aspects or embodiments identified herein) of the sixth aspect, mechanically and electrically connecting comprises applying conductive paste to the elongated conductor and the conductive portion of the intermediate body. In some embodiments, mechanically and electrically connecting comprises compressing anisotropic conductive film between the proximal portion of the elongated conductor and the conductive portion of the intermediate body. The connecting may be performed at a location remote from the coating. In some embodiments, the coating, testing, and calibrating are all performed at a location remote from the connecting.

[0054] In accordance with a seventh aspect, a method of making an on-skin wearable percutaneous analyte sensor comprises assembling electronic circuitry into an internal volume of a housing, wherein the electronic circuitry is configured for (1) detecting signals generated from an electrochemical reaction under the skin of a subject at a working electrode of an analyte sensor, and (2) wirelessly transmitting data derived from the detected signals outside of the housing for processing and/or display by a separate device. After assembling the electronic circuitry into the internal volume of the housing, attaching a proximal portion of the analyte sensor to an external electrical interface coupled to the electronic circuitry such that the electronic circuitry becomes connected to the analyte sensor to receive signals therefrom without opening the housing.

[0055] In generally applicable embodiments (i.e. independently combinable with any of the aspects or embodiments identified herein) of the seventh aspect, the method comprises sealing the interface after attaching the proximal portion of the analyte sensor. The method may comprise testing the electronic circuitry for functionality prior to the attaching. The method may comprise testing the analyte sensor for functionality prior to the attaching. The assembling may be performed at a location remote from the attaching.

[0056] In generally applicable embodiments (i.e. independently combinable with any of the aspects or embodiments identified herein) of the seventh aspect, the method may comprise coupling an intermediate body to the proximal portion of the analyte sensor, and the attaching may comprise attaching the intermediate body to the external elec-

trical interface. The method may then comprise performing at least one manufacturing or testing procedure on the working electrode using the intermediate body prior to the attaching. The performing may comprise coating the working electrode of the analyte sensor. The coupling may be performed at a first location, the assembling may be performed at a second location, and the performing may be performed at a third location, wherein the first, second, and third locations are remote from one another. The attaching and/or the coupling may be performed with anisotropic conductive film The method may further comprise attaching an inserter to the housing for implanting the working electrode into a subject.

[0057] It is understood that various configurations of the subject technology will become readily apparent to those skilled in the art from the disclosure, wherein various configurations of the subject technology are shown and described by way of illustration. As will be realized, the subject technology is capable of other and different configurations and its several details are capable of modification in various other respects, all without departing from the scope of the subject technology. Accordingly, the summary, drawings and detailed description are to be regarded as illustrative in nature and not as restrictive.

BRIEF DESCRIPTION OF THE DRAWINGS

[0058] The present embodiments now will be discussed in detail with an emphasis on highlighting the advantageous features. These embodiments are for illustrative purposes only and are not to scale, instead emphasizing the principles of the disclosure. These drawings include the following figures, in which like numerals indicate like parts:

[0059] FIG. **1** is a schematic view of an analyte sensor system attached to a host and communicating with a plurality of example devices, according to some embodiments.

[0060] FIG. **2** is a block diagram that illustrates electronics associated with the sensor system of FIG. **1**, according to some embodiments.

[0061] FIGS. **3**A-**3**C illustrate a wearable device having an analyte sensor, according to some embodiments.

[0062] FIG. **3**D illustrates one implementation of an elongated sensor connected to a potentiostat.

[0063] FIG. **4**A illustrates a schematic of a pre-connected analyte sensor, according to some embodiments.

[0064] FIG. **4**B illustrates another schematic of a pre-connected analyte sensor, according to some embodiments.

[0065] FIG. **4**C illustrates a layered view of a pre-connected analyte sensor, according to some embodiments.

[0066] FIG. **4**D illustrates a schematic view of an array of pre-connected analyte sensors, according to some embodiments.

[0067] FIGS. **5**A-**5**E illustrate block diagrams of a system having a manufacturing system and a wearable device for an analyte sensor, according to some embodiments.

[0068] FIG. **6** illustrates a cross-sectional schematic view of a wearable device with a pre-connected analyte sensor, according to some embodiments.

[0069] FIG. **7** illustrates a cross-sectional schematic view of a wearable device with a pre-connected analyte sensor, according to some embodiments.

[0070] FIG. **8** illustrates a cross-sectional schematic view of a wearable device with a pre-connected analyte sensor, according to some embodiments.

[0071] FIG. **9** illustrates a perspective view of an on-skin sensor assembly, according to some embodiments.

[0072] FIGS. **10** and **11** illustrate perspective views of sensor carriers that have springs, according to some embodiments.

[0073] FIG. **12** illustrates a cross-sectional perspective view of a portion of a sensor carrier, according to some embodiments.

[0074] FIGS. **13**A-**13**B illustrate perspective views of a wearable sensor assembly, according to some embodiments.

[0075] FIG. **13**C illustrates an exploded view of components of a wearable sensor assembly, according to some embodiments.

[0076] FIGS. **14**A-**14**B illustrate perspective views of another wearable sensor assembly, according to some embodiments.

[0077] FIG. **14**C illustrates an exploded view of components of another wearable sensor assembly, according to some embodiments, including an external electrical interface embodiment.

[0078] FIG. **14**D illustrates a top plan view of the external electrical interface of FIG. **14**C with a pre-connected sensor assembly installed.

[0079] FIG. **14**E is a cross section along lines E-E in FIG. **14**D.

[0080] FIG. **15**A illustrates another embodiment of a printed circuit board substrate for a sensor carrier.

[0081] FIGS. **15**B and **15**C illustrate alternative embodiments for coupling a sensor and sensor carrier to an electrical interface of a wearable sensor assembly.

[0082] FIG. **16** illustrates a top view of a sensor carrier attached to an analyte sensor with conductive adhesive, according to some embodiments.

[0083] FIG. **17** illustrates an end view of a sensor carrier attached to an analyte sensor with conductive adhesive, according to some embodiments.

[0084] FIG. **18** illustrates an end view of a sensor carrier attached to an analyte sensor with conductive adhesive in a recess of a sensor carrier substrate, according to some embodiments.

[0085] FIG. **19** illustrates an end view of a sensor carrier attached to an analyte sensor with conductive adhesive in a corner of a sensor carrier substrate, according to some embodiments.

[0086] FIG. **20** illustrates an end view of a sensor carrier attached to an analyte sensor with conductive adhesive in a rounded recess of a sensor carrier substrate, according to some embodiments.

[0087] FIGS. **21**A and **21**B illustrate a perspective view and an end view respectively of an analyte sensor attached to a sensor carrier in guide structures.

[0088] FIG. **22** illustrates a top view of a sensor carrier attached to an analyte sensor with conductive tape, according to some embodiments.

[0089] FIG. **23** illustrates a top view of a sensor carrier having a substrate attached to and wrapped around an analyte sensor, according to some embodiments.

[0090] FIG. **24** illustrates a top view of a sensor carrier attached to an analyte sensor with welded conductive plastic, according to some embodiments.

[0091] FIGS. **25** and **26** illustrate manufacturing equipment for attaching a sensor carrier to an analyte sensor with conductive plastic, according to some embodiments.

[0092] FIG. **27** is a perspective-view schematic illustrating a proximal portion of an analyte sensor having flattened electrical connector portions, according to some embodiments.

[0093] FIG. **28** illustrates a side view of the analyte sensor of FIG. **24** attached to a sensor carrier, according to some embodiments.

[0094] FIG. **29** illustrates a top view of a sensor carrier having a flexible substrate configured to wrap around an analyte sensor, according to some embodiments.

[0095] FIG. **30** illustrates a perspective view of a sensor carrier having substrate with a flexible portion configured to wrap around an analyte sensor, according to some embodiments.

[0096] FIGS. **31**A and **31**B illustrate another embodiment of a sensor carrier attached to an analyte sensor.

[0097] FIG. **32** illustrates a top view of a sensor carrier having a movable fastener for attaching an analyte sensor, according to some embodiments.

[0098] FIG. **33** illustrates a perspective view of the movable fastener of FIG. **29**, according to some embodiments.

[0099] FIG. **34** illustrates a perspective view of a sensor carrier implemented as a barrel fastener, according to some embodiments.

[0100] FIG. **35**A illustrates a face-on view of a sensor carrier having a flexible substrate wrapped around an analyte sensor, according to some embodiments.

[0101] FIG. **35**B illustrates a perspective view of a sensor carrier having a flexible substrate wrapped around multiple analyte sensors, according to some embodiments.

[0102] FIG. **36** illustrates an end view of a sensor carrier having a crimp connector, according to some embodiments.

[0103] FIG. **37** illustrates an end view of a sensor carrier attached to an analyte sensor by a crimp connector, according to some embodiments.

[0104] FIG. **38** illustrates a side view of a sensor carrier having crimp connectors, according to some embodiments.

[0105] FIG. **39** illustrates a perspective view of a sensor carrier, according to some embodiments.

[0106] FIG. **40** illustrates a perspective view of a sensor carrier formed from a molded interconnect device, according to some embodiments.

[0107] FIG. **41** illustrates a top view of a sensor carrier formed from a molded interconnect device, according to some embodiments.

[0108] FIG. **42** illustrates a side view of a sensor carrier attached to an analyte sensor by a conductive coupler, according to some embodiments.

[0109] FIG. **43** illustrates a side view of a sensor carrier having an elongated dimension for attachment to multiple analyte sensors, according to some embodiments.

[0110] FIG. **44** illustrates a top view of a sensor carrier having a flexible substrate for wrapping around an analyte sensor, according to some embodiments.

[0111] FIG. **45** illustrates a top view of another sensor carrier having a flexible substrate for wrapping around an analyte sensor, according to some embodiments.

[0112] FIG. **46** illustrates a top view of another sensor carrier having a flexible substrate for wrapping around an analyte sensor, according to some embodiments.

[0113] FIG. **47**A illustrates a side view of a sensor carrier having a feed-guide strip on an elongated dimension for attachment to multiple analyte sensors, according to some embodiments.

[0114] FIG. **47**B illustrates a perspective view of the sensor carrier of FIG. **47**A wrapped on a reel, according to some embodiments.

[0115] FIG. **48** illustrates a top view of the sensor carrier of FIG. **47**A with a sensor carrier singulated from the sensor carrier, according to some embodiments.

[0116] FIG. **49** illustrates a perspective view of a sensor carrier having spring-loaded receptacles for attachment of multiple analyte sensors, according to some embodiments.

[0117] FIG. **50** illustrates a perspective view of a sensor carrier having magnetic datum features for positioning and orientation of multiple analyte sensors, according to some embodiments.

[0118] FIG. **51**A illustrates a top view of a sensor carrier having a rigid flex panel for attachment to multiple analyte sensors, according to some embodiments.

[0119] FIG. **51**B illustrates a top view of a sensor carrier having a rigid flex panel for attachment to multiple analyte sensors having an edge card connector pad for electronic connection, according to some embodiments.

[0120] FIG. **52**A illustrates a top view of a sensor carrier singulated from the sensor carrier of FIG. **48** and attached to an analyte sensor to form a pre-connected sensor, according to some embodiments.

[0121] FIG. **52**B illustrates a sensor carrier having a rigid flex panel for attachment to multiple analyte sensors of FIG. **48**B without the V-score portion, according to some embodiments.

[0122] FIG. **53**A illustrates the pre-connected sensor to be installed in a wearable device, according to some embodiments.

[0123] FIG. **53**B illustrates the pre-connected sensor in a folded position to be installed in a wearable device, according to some embodiments.

[0124] FIG. **54** illustrates a sensor carrier implemented as a daughter board for connection to an analyte sensor, according to some embodiments.

[0125] FIG. **55** illustrates a sensor carrier implemented with a pinch clip, according to some embodiments.

[0126] FIG. **56** illustrates a sensor carrier having clips for connection to an analyte sensor, according to some embodiments.

[0127] FIG. **57** is a flow chart of illustrative operations that may be performed for manufacturing and using a pre-connected sensor, according to some embodiments.

[0128] FIG. **58** illustrates a perspective view of a sensor-holding apparatus having a fluted flexible tube, according to some embodiments

[0129] FIG. **59** illustrates an exploded perspective view of the apparatus of FIG. **58**, according to some embodiments.

[0130] FIG. **60** illustrates a device that includes a sensor mounted in the apparatus of FIG. **55**, according to some embodiments.

[0131] FIG. **61** illustrates a diagram of a carrier for pre-connected sensors, according to some embodiments.

[0132] Like reference numerals refer to like elements throughout. Elements are not to scale unless otherwise noted.

DETAILED DESCRIPTION

[0133] The following description and examples illustrate some exemplary implementations, embodiments, and arrangements of the disclosed invention in detail. Those of skill in the art will recognize that there are numerous

variations and modifications of this invention that are encompassed by its scope. Accordingly, the description of a certain example embodiment should not be deemed to limit the scope of the present invention.

Definitions

[0134] In order to facilitate an understanding of the various embodiments described herein, a number of terms are defined below.

[0135] The term "analyte" as used herein is a broad term and is to be given its ordinary and customary meaning to a person of ordinary skill in the art (and is not to be limited to a special or customized meaning), and furthermore refers without limitation to a substance or chemical constituent in a biological fluid (for example, blood, interstitial fluid, cerebral spinal fluid, lymph fluid or urine) that can be analyzed. Analytes can include naturally occurring substances, artificial substances, metabolites, and/or reaction products. In some embodiments, the analyte for measurement by the sensor heads, devices, and methods is analyte. However, other analytes are contemplated as well, including but not limited to acarboxyprothrombin; acylcarnitine; adenine phosphoribosyl transferase; adenosine deaminase; albumin; alpha-fetoprotein; amino acid profiles (arginine (Krebs cycle), histidine/urocanic acid, homocysteine, phenylalanine/tyrosine, tryptophan); andrenostenedione; antipyrine; arabinitol enantiomers; arginase; benzoylecgonine (cocaine); biotinidase; biopterin; c-reactive protein; carnitine; carnosinase; CD4; ceruloplasmin; chenodeoxycholic acid; chloroquine; cholesterol; cholinesterase; conjugated 1-13 hydroxy-cholic acid; cortisol; creatine kinase; creatine kinase MM isoenzyme; cyclosporin A; D-penicillamine; de-ethylchloroquine; dehydroepiandrosterone sulfate; DNA (acetylator polymorphism, alcohol dehydrogenase, alpha 1-antitrypsin, cystic fibrosis, Duchenne/Becker muscular dystrophy, analyte-6-phosphate dehydrogenase, hemoglobin A, hemoglobin S, hemoglobin C, hemoglobin D, hemoglobin E, hemoglobin F, D-Punjab, beta-thalassemia, hepatitis B virus, HCMV, HIV-1, HTLV-1, Leber hereditary optic neuropathy, MCAD, RNA, PKU, *Plasmodium vivax*, sexual differentiation, 21-deoxycortisol); desbutylhalofantrine; dihydropteridine reductase; diptheria/tetanus antitoxin; erythrocyte arginase; erythrocyte protoporphyrin; esterase D; fatty acids/acylglycines; free β-human chorionic gonadotropin; free erythrocyte porphyrin; free thyroxine (FT4); free tri-iodothyronine (FT3); fumarylacetoacetase; galactose/gal-1-phosphate; galactose-1-phosphate uridyltransferase; gentamicin; analyte-6-phosphate dehydrogenase; glutathione; glutathione perioxidase; glycocholic acid; glycosylated hemoglobin; halofantrine; hemoglobin variants; hexosaminidase A; human erythrocyte carbonic anhydrase I; 17-alpha-hydroxyprogesterone; hypoxanthine phosphoribosyl transferase; immunoreactive trypsin; lactate; lead; lipoproteins ((a), B/A-1, β); lysozyme; mefloquine; netilmicin; phenobarbitone; phenytoin; phytanic/pristanic acid; progesterone; prolactin; prolidase; purine nucleoside phosphorylase; quinine; reverse tri-iodothyronine (rT3); selenium; serum pancreatic lipase; sissomicin; somatomedin C; specific antibodies (adenovirus, anti-nuclear antibody, anti-zeta antibody, arbovirus, Aujeszky's disease virus, dengue virus, *Dracunculus medinensis, Echinococcus granulosus, Entamoeba histolytica*, enterovirus, *Giardia duodenalisa, Helicobacter pylori*, hepatitis B virus, herpes virus, HIV-1, IgE (atopic disease), influenza virus, *Leishmania donovani*, leptospira, measles/mumps/rubella, *Mycobacterium leprae, Mycoplasma pneumoniae*, Myoglobin, *Onchocerca volvulus*, parainfluenza virus, *Plasmodium falciparum*, poliovirus, *Pseudomonas aeruginosa*, respiratory syncytial virus, *rickettsia* (scrub typhus), *Schistosoma mansoni, Toxoplasma gondii, Trepenoma pallidium, Trypanosoma cruzi*/rangeli, vesicular *stomatis* virus, *Wuchereria bancrofti*, yellow fever virus); specific antigens (hepatitis B virus, HIV-1); succinylacetone; sulfadoxine; theophylline; thyrotropin (TSH); thyroxine (T4); thyroxine-binding globulin; trace elements; transferrin; UDP-galactose-4-epimerase; urea; uroporphyrinogen I synthase; vitamin A; white blood cells; and zinc protoporphyrin. Salts, sugar, protein, fat, vitamins, and hormones naturally occurring in blood or interstitial fluids can also constitute analytes in certain embodiments. The analyte can be naturally present in the biological fluid, for example, a metabolic product, a hormone, an antigen, an antibody, and the like. Alternatively, the analyte can be introduced into the body, for example, a contrast agent for imaging, a radioisotope, a chemical agent, a fluorocarbon-based synthetic blood, or a drug or pharmaceutical composition, including but not limited to insulin; ethanol; cannabis (marijuana, tetrahydrocannabinol, hashish); inhalants (nitrous oxide, amyl nitrite, butyl nitrite, chlorohydrocarbons, hydrocarbons); cocaine (crack cocaine); stimulants (amphetamines, methamphetamines, Ritalin, Cylert, Preludin, Didrex, PreState, Voranil, Sandrex, Plegine); depressants (barbituates, methaqualone, tranquilizers such as Valium, Librium, Miltown, Serax, Equanil, Tranxene); hallucinogens (phencyclidine, lysergic acid, mescaline, peyote, psilocybin); narcotics (heroin, codeine, morphine, opium, meperidine, Percocet, Percodan, Tussionex, Fentanyl, Darvon, Talwin, Lomotil); designer drugs (analogs of fentanyl, meperidine, amphetamines, methamphetamines, and phencyclidine, for example, Ecstasy); anabolic steroids; and nicotine. The metabolic products of drugs and pharmaceutical compositions are also contemplated analytes. Analytes such as neurochemicals and other chemicals generated within the body can also be analyzed, such as, for example, ascorbic acid, uric acid, dopamine, noradrenaline, 3-methoxytyramine (3MT), 3,4-Dihydroxyphenylacetic acid (DOPAC), Homovanillic acid (HVA), 5-Hydroxytryptamine (5HT), and 5-Hydroxyindoleacetic acid (FHIAA).

[0136] The terms "microprocessor" and "processor" as used herein are broad terms and are to be given their ordinary and customary meaning to a person of ordinary skill in the art (and are not to be limited to a special or customized meaning), and furthermore refer without limitation to a computer system, state machine, and the like that performs arithmetic and logic operations using logic circuitry that responds to and processes the basic instructions that drive a computer.

[0137] The term "calibration" as used herein is a broad term and is to be given its ordinary and customary meaning to a person of ordinary skill in the art (and is not to be limited to a special or customized meaning), and furthermore refers without limitation to the process of determining the relationship between the sensor data and the corresponding reference data, which can be used to convert sensor data into meaningful values substantially equivalent to the reference data, with or without utilizing reference data in real time. In some embodiments, namely, in analyte sensors, calibration can be updated or recalibrated (at the factory, in real time and/or retrospectively) over time as changes in the relation-

ship between the sensor data and reference data occur, for example, due to changes in sensitivity, baseline, transport, metabolism, and the like.

[0138] The terms "calibrated data" and "calibrated data stream" as used herein are broad terms and are to be given their ordinary and customary meaning to a person of ordinary skill in the art (and are not to be limited to a special or customized meaning), and furthermore refer without limitation to data that has been transformed from its raw state to another state using a function, for example a conversion function, including by use of a sensitivity, to provide a meaningful value to a user.

[0139] The term "algorithm" as used herein is a broad term and is to be given its ordinary and customary meaning to a person of ordinary skill in the art (and is not to be limited to a special or customized meaning), and furthermore refers without limitation to a computational process (for example, programs) involved in transforming information from one state to another, for example, by using computer processing.

[0140] The term "sensor" as used herein is a broad term and is to be given its ordinary and customary meaning to a person of ordinary skill in the art (and is not to be limited to a special or customized meaning), and furthermore refers without limitation to the component or region of a device by which an analyte can be quantified. A "lot" of sensors generally refers to a group of sensors that are manufactured on or around the same day and using the same processes and tools/materials. Additionally, sensors that measure temperature, pressure etc. may be referred to as a "sensor".

[0141] The terms "glucose sensor" and "member for determining the amount of glucose in a biological sample" as used herein are broad terms and are to be given their ordinary and customary meaning to a person of ordinary skill in the art (and are not to be limited to a special or customized meaning), and furthermore refer without limitation to any mechanism (e.g., enzymatic or non-enzymatic) by which glucose can be quantified. For example, some embodiments utilize a membrane that contains glucose oxidase that catalyzes the conversion of oxygen and glucose to hydrogen peroxide and gluconate, as illustrated by the following chemical reaction:

$$\text{Glucose}+O_2 \rightarrow \text{Gluconate}+H_2O_2$$

[0142] Because for each glucose molecule metabolized, there is a proportional change in the co-reactant O_2 and the product H_2O_2, one can use an electrode to monitor the current change in either the co-reactant or the product to determine glucose concentration.

[0143] The terms "operably connected" and "operably linked" as used herein are broad terms and are to be given their ordinary and customary meaning to a person of ordinary skill in the art (and are not to be limited to a special or customized meaning), and furthermore refer without limitation to one or more components being linked to another component(s) in a manner that allows transmission of signals between the components. For example, one or more electrodes can be used to detect the amount of glucose in a sample and convert that information into a signal, e.g., an electrical or electromagnetic signal; the signal can then be transmitted to an electronic circuit. In this case, the electrode is "operably linked" to the electronic circuitry. These terms are broad enough to include wireless connectivity.

[0144] The term "determining" encompasses a wide variety of actions. For example, "determining" may include calculating, computing, processing, deriving, investigating, looking up (e.g., looking up in a table, a database or another data structure), ascertaining and the like. Also, "determining" may include receiving (e.g., receiving information), accessing (e.g., accessing data in a memory) and the like. Also, "determining" may include resolving, selecting, choosing, calculating, deriving, establishing and/or the like. Determining may also include ascertaining that a parameter matches a predetermined criterion, including that a threshold has been met, passed, exceeded, and so on.

[0145] The term "substantially" as used herein is a broad term and is to be given its ordinary and customary meaning to a person of ordinary skill in the art (and is not to be limited to a special or customized meaning), and furthermore refers without limitation to being largely but not necessarily wholly that which is specified.

[0146] The term "host" as used herein is a broad term and is to be given its ordinary and customary meaning to a person of ordinary skill in the art (and is not to be limited to a special or customized meaning), and furthermore refers without limitation to mammals, particularly humans.

[0147] The term "continuous analyte (or glucose) sensor" as used herein is a broad term and is to be given its ordinary and customary meaning to a person of ordinary skill in the art (and is not to be limited to a special or customized meaning), and furthermore refers without limitation to a device that continuously or continually measures a concentration of an analyte, for example, at time intervals ranging from fractions of a second up to, for example, 1, 2, or 5 minutes, or longer. In one exemplary embodiment, the continuous analyte sensor is a glucose sensor such as described in U.S. Pat. No. 6,001,067, which is incorporated herein by reference in its entirety.

[0148] The term "sensing membrane" as used herein is a broad term and is to be given its ordinary and customary meaning to a person of ordinary skill in the art (and is not to be limited to a special or customized meaning), and furthermore refers without limitation to a permeable or semi-permeable membrane that can be comprised of two or more domains and is typically constructed of materials of a few microns thickness or more, which are permeable to oxygen and may or may not be permeable to glucose. In one example, the sensing membrane comprises an immobilized glucose oxidase enzyme, which enables an electrochemical reaction to occur to measure a concentration of glucose.

[0149] The term "sensor data," as used herein is a broad term and is to be given its ordinary and customary meaning to a person of ordinary skill in the art (and are not to be limited to a special or customized meaning), and furthermore refers without limitation to any data associated with a sensor, such as a continuous analyte sensor. Sensor data includes a raw data stream, or simply data stream, of analog or digital signals directly related to a measured analyte from an analyte sensor (or other signal received from another sensor), as well as calibrated and/or filtered raw data. In one example, the sensor data comprises digital data in "counts" converted by an A/D converter from an analog signal (e.g., voltage or amps) and includes one or more data points representative of a glucose concentration. Thus, the terms "sensor data point" and "data point" refer generally to a digital representation of sensor data at a particular time. The terms broadly encompass a plurality of time spaced data points from a sensor, such as from a substantially continuous glucose sensor, which comprises individual measurements

taken at time intervals ranging from fractions of a second up to, e.g., 1, 2, or 5 minutes or longer. In another example, the sensor data includes an integrated digital value representative of one or more data points averaged over a time period. Sensor data may include calibrated data, smoothed data, filtered data, transformed data, and/or any other data associated with a sensor.

[0150] The term "sensor electronics," as used herein, is a broad term, and is to be given its ordinary and customary meaning to a person of ordinary skill in the art (and is not to be limited to a special or customized meaning), and refers without limitation to the components (for example, hardware and/or software) of a device configured to process data. As described in further detail hereinafter (see, e.g., FIG. **2**) "sensor electronics" may be arranged and configured to measure, convert, store, transmit, communicate, and/or retrieve sensor data associated with an analyte sensor.

[0151] The terms "sensitivity" or "sensor sensitivity," as used herein, are broad terms, and are to be given their ordinary and customary meaning to a person of ordinary skill in the art (and is not to be limited to a special or customized meaning), and refer without limitation to an amount of signal produced by a certain concentration of a measured analyte, or a measured species (e.g., H_2O_2) associated with the measured analyte (e.g., glucose). For example, in one embodiment, a sensor has a sensitivity from about 1 to about 300 picoAmps of current for every 1 mg/dL of glucose analyte.

[0152] The term "sample," as used herein, is a broad term, and is to be given its ordinary and customary meaning to a person of ordinary skill in the art (and it is not to be limited to a special or customized meaning), and refers without limitation to a sample of a host body, for example, body fluids, including, blood, serum, plasma, interstitial fluid, cerebral spinal fluid, lymph fluid, ocular fluid, saliva, oral fluid, urine, excretions, or exudates.

[0153] The term "distal to," as used herein, is a broad term, and is to be given its ordinary and customary meaning to a person of ordinary skill in the art (and is not to be limited to a special or customized meaning), and refers without limitation to the spatial relationship between various elements in comparison to a particular point of reference. In general, the term indicates an element is located relatively far from the reference point than another element.

[0154] The term "proximal to," as used herein, is a broad term, and is to be given its ordinary and customary meaning to a person of ordinary skill in the art (and is not to be limited to a special or customized meaning), and refers without limitation to the spatial relationship between various elements in comparison to a particular point of reference. In general, the term indicates an element is located relatively near to the reference point than another element.

[0155] The terms "electrical connection" and "electrical contact," as used herein, are broad terms, and are to be given their ordinary and customary meaning to a person of ordinary skill in the art (and are not to be limited to a special or customized meaning), and refer without limitation to any connection between two electrical conductors known to those in the art. In one embodiment, electrodes are in electrical connection with (e.g., electrically connected to) the electronic circuitry of a device. In another embodiment, two materials, such as but not limited to two metals, can be in electrical contact with each other, such that an electrical current can pass from one of the two materials to the other material and/or an electrical potential can be applied.

[0156] The term "elongated conductive body," as used herein, is a broad term, and is to be given its ordinary and customary meaning to a person of ordinary skill in the art (and is not to be limited to a special or customized meaning), and refers without limitation to an elongated body formed at least in part of a conductive material and includes any number of coatings that may be formed thereon. By way of example, an "elongated conductive body" may mean a bare elongated conductive core (e.g., a metal wire), an elongated conductive core coated with one, two, three, four, five, or more layers of material, each of which may or may not be conductive, or an elongated non-conductive core with conductive coatings, traces, and/or electrodes thereon and coated with one, two, three, four, five, or more layers of material, each of which may or may not be conductive.

[0157] The term "ex vivo portion," as used herein, is a broad term, and is to be given its ordinary and customary meaning to a person of ordinary skill in the art (and is not to be limited to a special or customized meaning), and refers without limitation to a portion of a device (for example, a sensor) adapted to remain and/or exist outside of a living body of a host.

[0158] The term "in vivo portion," as used herein, is a broad term, and is to be given its ordinary and customary meaning to a person of ordinary skill in the art (and is not to be limited to a special or customized meaning), and refers without limitation to a portion of a device (for example, a sensor) adapted for insertion into and/or existence within a living body of a host.

[0159] The term "potentiostat," as used herein, is a broad term, and is to be given its ordinary and customary meaning to a person of ordinary skill in the art (and is not to be limited to a special or customized meaning), and refers without limitation to an electronic instrument that controls the electrical potential between the working and reference electrodes at one or more preset values.

[0160] The term "processor module," as used herein, is a broad term, and is to be given its ordinary and customary meaning to a person of ordinary skill in the art (and are not to be limited to a special or customized meaning), and refers without limitation to a computer system, state machine, processor, components thereof, and the like designed to perform arithmetic or logic operations using logic circuitry that responds to and processes the basic instructions that drive a computer.

[0161] The term "sensor session," as used herein, is a broad term and is to be given its ordinary and customary meaning to a person of ordinary skill in the art (and is not to be limited to a special or customized meaning), and refers without limitation to a period of time a sensor is in use, such as but not limited to a period of time starting at the time the sensor is implanted (e.g., by the host) to removal of the sensor (e.g., removal of the sensor from the host's body and/or removal of (e.g., disconnection from) system electronics).

[0162] The terms "substantial" and "substantially," as used herein, are broad terms, and are to be given their ordinary and customary meaning to a person of ordinary skill in the art (and are not to be limited to a special or customized meaning), and refer without limitation to a sufficient amount that provides a desired function.

[0163] "Coaxial two conductor wire based sensor": A round wire sensor consisting of a conductive center core, an insulating middle layer and a conductive outer layer with the conductive layers exposed at one end for electrical contact.

[0164] "Pre-connected sensor": A sensor that has a "sensor interconnect/interposer/sensor carrier" attached to it. Therefore this "Pre-connected sensor" consists of two parts that are joined: the sensor itself, and the interconnect/interposer/sensor carrier. The term "pre-connected sensor" unit refers to the unit that is formed by the permanent union of these two distinct parts.

[0165] Other definitions will be provided within the description below, and in some cases from the context of the term's usage.

[0166] As employed herein, the following abbreviations apply: Eq and Eqs (equivalents); mEq (milliequivalents); M (molar); mM (millimolar) μM (micromolar); N (Normal); mol (moles); mmol (millimoles); μmol (micromoles); nmol (nanomoles); g (grams); mg (milligrams); μg (micrograms); Kg (kilograms); L (liters); mL (milliliters); dL (deciliters); μL (microliters); cm (centimeters); mm (millimeters); μm (micrometers); nm (nanometers); h and hr (hours); min. (minutes); s and sec. (seconds); ° C. (degrees Centigrade) ° F. (degrees Fahrenheit), Pa (Pascals), kPa (kiloPascals), MPa (megaPascals), GPa (gigaPascals), Psi (pounds per square inch), kPsi (kilopounds per square inch).

Overview/General Description of System

[0167] In vivo analyte sensing technology may rely on in vivo sensors. In vivo sensors may include an elongated conductive body having one or more electrodes such as a working electrode and a reference electrode.

[0168] For example, a platinum metal-clad, tantalum wire is sometimes used as a core bare sensing element with one or more reference or counter electrodes for an analyte sensor. This sensing element is coated in membranes to yield the final sensor.

[0169] Described herein are pre-connected sensors that include an analyte sensor attached to a sensor carrier (also referred to herein as a "sensor interposer"). The analyte sensor may include a working electrode and a reference electrode at a distal end of an elongated conductive body. The sensor carrier may include a substrate, one or more electrical contacts coupled to one or more electrical contacts of the sensor, and circuitry such as one or more additional or external electrical contacts for coupling the one or more electrical contacts that are coupled to the sensor contact(s) to external equipment such as a membrane dip coating station, a testing station, a calibration station, or sensor electronics of a wearable device. In some embodiments, the substrate can be referred to as an intermediate body.

[0170] The following description and examples described the present embodiments with reference to the drawings. In the drawings, reference numbers label elements of the present embodiments. These reference numbers are reproduced below in connection with the discussion of the corresponding drawing features.

Sensor System

[0171] FIG. **1** depicts an example system **100**, in accordance with some example implementations. The system **100** includes an analyte sensor system **101** including sensor electronics **112** and an analyte sensor **138**. The system **100** may include other devices and/or sensors, such as medicament delivery pump **102** and glucose meter **104**. The analyte sensor **138** may be physically connected to sensor electronics **112** and may be integral with (e.g., non-releasably attached to) or releasably attachable to the sensor electronics. For example, continuous analyte sensor **138** may be connected to sensor electronics **112** via a sensor carrier that mechanically and electrically interfaces the analyte sensor **138** with the sensor electronics. The sensor electronics **112**, medicament delivery pump **102**, and/or glucose meter **104** may couple with one or more devices, such as display devices **114**, **116**, **118**, and/or **120**.

[0172] In some example implementations, the system **100** may include a cloud-based analyte processor **490** configured to analyze analyte data (and/or other patient-related data) provided via network **409** (e.g., via wired, wireless, or a combination thereof) from sensor system **101** and other devices, such as display devices **114**, **116**, **118**, and/or **120** and the like, associated with the host (also referred to as a patient) and generate reports providing high-level information, such as statistics, regarding the measured analyte over a certain time frame. A full discussion of using a cloud-based analyte processing system may be found in U.S. patent application Ser. No. 13/788,375, entitled "Cloud-Based Processing of Analyte Data" and filed on Mar. 7, 2013, published as U.S. Patent Application Publication 2013/0325352, herein incorporated by reference in its entirety. In some implementations, one or more steps of the factory calibration algorithm can be performed in the cloud.

[0173] In some example implementations, the sensor electronics **112** may include electronic circuitry associated with measuring and processing data generated by the analyte sensor **138**. This generated analyte sensor data may also include algorithms, which can be used to process and calibrate the analyte sensor data, although these algorithms may be provided in other ways as well. The sensor electronics **112** may include hardware, firmware, software, or a combination thereof, to provide measurement of levels of the analyte via an analyte sensor, such as a glucose sensor. An example implementation of the sensor electronics **112** is described further below with respect to FIG. **2**.

[0174] In one implementation, the factory calibration algorithms described herein may be performed by the sensor electronics.

[0175] The sensor electronics **112** may, as noted, couple (e.g., wirelessly and the like) with one or more devices, such as display devices **114**, **116**, **118**, and/or **120**. The display devices **114**, **116**, **118**, and/or **120** may be configured for presenting information (and/or alarming), such as sensor information transmitted by the sensor electronics **112** for display at the display devices **114**, **116**, **118**, and/or **120**.

[0176] In one implementation, the factory calibration algorithms described herein may be performed at least in part by the display devices.

[0177] In some example implementations, the relatively small, key fob-like display device **114** may comprise a wrist watch, a belt, a necklace, a pendent, a piece of jewelry, an adhesive patch, a pager, a key fob, a plastic card (e.g., credit card), an identification (ID) card, and/or the like. This small display device **114** may include a relatively small display (e.g., smaller than the large display device **116**) and may be configured to display certain types of displayable sensor information, such as a numerical value, and an arrow, or a color code.

[0178] In some example implementations, the relatively large, hand-held display device **116** may comprise a hand-held receiver device, a palm-top computer, and/or the like. This large display device may include a relatively larger display (e.g., larger than the small display device **114**) and may be configured to display information, such as a graphical representation of the sensor data including current and historic sensor data output by sensor system **100**.

[0179] In some example implementations, the analyte sensor **138** may comprise a glucose sensor configured to measure glucose in the blood or interstitial fluid using one or more measurement techniques, such as enzymatic, chemical, physical, electrochemical, spectrophotometric, polarimetric, calorimetric, iontophoretic, radiometric, immunochemical, and the like. In implementations in which the analyte sensor **138** includes a glucose sensor, the glucose sensor may comprise any device capable of measuring the concentration of glucose and may use a variety of techniques to measure glucose including invasive, minimally invasive, and non-invasive sensing techniques (e.g., fluorescence monitoring), to provide data, such as a data stream, indicative of the concentration of glucose in a host. The data stream may be sensor data (raw and/or filtered), which may be converted into a calibrated data stream used to provide a value of glucose to a host, such as a user, a patient, or a caretaker (e.g., a parent, a relative, a guardian, a teacher, a doctor, a nurse, or any other individual that has an interest in the wellbeing of the host). Moreover, the analyte sensor **138** may be implanted as at least one of the following types of analyte sensors: an implantable glucose sensor, a transcutaneous glucose sensor, implanted in a host vessel or extracorporeally, a subcutaneous sensor, a refillable subcutaneous sensor, an intravascular sensor.

[0180] Although the disclosure herein refers to some implementations that include an analyte sensor **138** comprising a glucose sensor, the analyte sensor **138** may comprise other types of analyte sensors as well. Moreover, although some implementations refer to the glucose sensor as an implantable glucose sensor, other types of devices capable of detecting a concentration of glucose and providing an output signal representative of glucose concentration may be used as well. Furthermore, although the description herein refers to glucose as the analyte being measured, processed, and the like, other analytes may be used as well including, for example, ketone bodies (e.g., acetone, acetoacetic acid and beta hydroxybutyric acid, lactate, etc.), glucagon, acetyl-CoA, triglycerides, fatty acids, intermediaries in the citric acid cycle, choline, insulin, cortisol, testosterone, and the like.

[0181] In some manufacturing systems, sensors **138** are manually sorted, placed and held in fixtures. These fixtures are manually moved from station to station during manufacturing for various process steps including interfacing electrical measurement equipment for testing and calibration operations. However, manual handling of sensors can be inefficient, can cause delays due to non-ideal mechanical and electrical connections, and can risk damage to the sensor and/or testing and calibration equipment and can induce sensor variability that can lead to inaccurate verification data being collected in manufacturing. In addition, the process of packaging sensor **138** with the sensor electronics **112** into a wearable device involves further manual manipulation of the sensor that can damage the sensor **138**.

[0182] Various systems, devices, and methods described herein help to reduce or eliminate manual interaction with a sensor. For example, a pre-connected sensor may be provided that includes a sensor interconnect or sensor carrier electrically coupled to sensor electrodes and having mechanical and electrical features configured to accurately interface with wearable electronics, automation equipment and/or robustly connect to measurement equipment.

[0183] Identification and other data associated with each sensor may be stored on the sensor carrier for logging and tracking of each sensor during manufacturing, testing, calibration, and in vivo operations. Following testing and calibration operations, the sensor carrier may be used to connect the sensor to sensor electronics of a wearable device, such as an on-skin sensor assembly, in an arrangement that is sealed and electrically robust.

[0184] FIG. **2** depicts an example of electronics **112** that may be used in sensor electronics **112** or may be implemented in a manufacturing station such as a testing station, a calibration station, a smart carrier, or other equipment used during manufacturing of device **101**, in accordance with some example implementations. The sensor electronics **112** may include electronics components that are configured to process sensor information, such as sensor data, and generate transformed sensor data and displayable sensor information, e.g., via a processor module. For example, the processor module may transform sensor data into one or more of the following: filtered sensor data (e.g., one or more filtered analyte concentration values), raw sensor data, calibrated sensor data (e.g., one or more calibrated analyte concentration values), rate of change information, trend information, rate of acceleration/deceleration information, sensor diagnostic information, location information, alarm/alert information, calibration information such as may be determined by factory calibration algorithms as disclosed herein, smoothing and/or filtering algorithms of sensor data, and/or the like.

[0185] In some embodiments, a processor module **214** is configured to achieve a substantial portion, if not all, of the data processing, including data processing pertaining to factory calibration. Processor module **214** may be integral to sensor electronics **112** and/or may be located remotely, such as in one or more of devices **114**, **116**, **118**, and/or **120** and/or cloud **490**. For example, in some embodiments, processor module **214** may be located at least partially within a cloud-based analyte processor **490** or elsewhere in network **409**.

[0186] In some example implementations, the processor module **214** may be configured to calibrate the sensor data, and the data storage memory **220** may store the calibrated sensor data points as transformed sensor data. Moreover, the processor module **214** may be configured, in some example implementations, to wirelessly receive calibration information from a display device, such as devices **114**, **116**, **118**, and/or **120**, to enable calibration of the sensor data from sensor **138**. Furthermore, the processor module **214** may be configured to perform additional algorithmic processing on the sensor data (e.g., calibrated and/or filtered data and/or other sensor information), and the data storage memory **220** may be configured to store the transformed sensor data and/or sensor diagnostic information associated with the algorithms. The processor module **214** may further be configured to store and use calibration information determined from a factory calibration, as described below.

[0187] In some example implementations, the sensor electronics **112** may comprise an application-specific integrated circuit (ASIC) **205** coupled to a user interface **222**. The ASIC **205** may further include a potentiostat **210**, a telemetry module **232** for transmitting data from the sensor electronics **112** to one or more devices, such as devices **114**, **116**, **118**, and/or **120**, and/or other components for signal processing and data storage (e.g., processor module **214** and data storage memory **220**). Although FIG. **2** depicts ASIC **205**, other types of circuitry may be used as well, including field programmable gate arrays (FPGA), one or more microprocessors configured to provide some (if not all of) the processing performed by the sensor electronics **12**, analog circuitry, digital circuitry, or a combination thereof.

[0188] In the example depicted in FIG. **2**, through a first input port **211** for sensor data the potentiostat **210** is coupled to an analyte sensor **138**, such as a glucose sensor to generate sensor data from the analyte. The potentiostat **210** may be coupled to a working electrode **211** and reference electrode **212** that form a part of the sensor **138**. The potentiostat may provide a voltage to one of the electrodes **211**, **212** of the analyte sensor **138** to bias the sensor for measurement of a value (e.g., a current) indicative of the analyte concentration in a host (also referred to as the analog portion of the sensor). The potentiostat **210** may have one or more connections to the sensor **138** depending on the number of electrodes incorporated into the analyte sensor **138** (such as a counter electrode as a third electrode).

[0189] In some example implementations, the potentiostat **210** may include a resistor that translates a current value from the sensor **138** into a voltage value, while in some example implementations, a current-to-frequency converter (not shown) may also be configured to integrate continuously a measured current value from the sensor **138** using, for example, a charge-counting device. In some example implementations, an analog-to-digital converter (not shown) may digitize the analog signal from the sensor **138** into so-called "counts" to allow processing by the processor module **214**. The resulting counts may be directly related to the current measured by the potentiostat **210**, which may be directly related to an analyte level, such as a glucose level, in the host.

[0190] The telemetry module **232** may be operably connected to processor module **214** and may provide the hardware, firmware, and/or software that enable wireless communication between the sensor electronics **112** and one or more other devices, such as display devices, processors, network access devices, and the like. A variety of wireless radio technologies that can be implemented in the telemetry module **232** include Bluetooth, Bluetooth Low-Energy, ANT, ANT+, ZigBee, IEEE 802.11, IEEE 802.16, cellular radio access technologies, radio frequency (RF), infrared (IR), paging network communication, magnetic induction, satellite data communication, spread spectrum communication, frequency hopping communication, near field communications, and/or the like. In some example implementations, the telemetry module **232** comprises a Bluetooth chip, although Bluetooth technology may also be implemented in a combination of the telemetry module **232** and the processor module **214**.

[0191] The processor module **214** may control the processing performed by the sensor electronics **112**. For example, the processor module **214** may be configured to process data (e.g., counts), from the sensor, filter the data, calibrate the data, perform fail-safe checking, and/or the like.

[0192] Potentiostat **210** may measure the analyte (e.g., glucose and/or the like) at discrete time intervals or continuously, for example, using a current-to-voltage or current-to-frequency converter.

[0193] The processor module **214** may further include a data generator (not shown) configured to generate data packages for transmission to devices, such as the display devices **114**, **116**, **118**, and/or **120**. Furthermore, the processor module **214** may generate data packets for transmission to these outside sources via telemetry module **232**. In some example implementations, the data packages may include an identifier code for the sensor and/or sensor electronics **112**, raw data, filtered data, calibrated data, rate of change information, trend information, error detection or correction, and/or the like.

[0194] The processor module **214** may also include a program memory **216** and other memory **218**. The processor module **214** may be coupled to a communications interface, such as a communication port **238**, and a source of power, such as a battery **234**. Moreover, the battery **234** may be further coupled to a battery charger and/or regulator **236** to provide power to sensor electronics **112** and/or charge the battery **234**.

[0195] The program memory **216** may be implemented as a semi-static memory for storing data, such as an identifier for a coupled sensor **138** (e.g., a sensor identifier (ID)) and for storing code (also referred to as program code) to configure the ASIC **205** to perform one or more of the operations/functions described herein. For example, the program code may configure processor module **214** to process data streams or counts, filter, perform the calibration methods described below, perform fail-safe checking, and the like.

[0196] The memory **218** may also be used to store information. For example, the processor module **214** including memory **218** may be used as the system's cache memory, where temporary storage is provided for recent sensor data received from the sensor. In some example implementations, the memory may comprise memory storage components, such as read-only memory (ROM), random-access memory (RAM), dynamic-RAM, static-RAM, non-static RAM, electrically erasable programmable read only memory (EEPROM), rewritable ROMs, flash memory, and the like.

[0197] The data storage memory **220** may be coupled to the processor module **214** and may be configured to store a variety of sensor information. In some example implementations, the data storage memory **220** stores one or more days of analyte sensor data. The stored sensor information may include one or more of the following: a time stamp, raw sensor data (one or more raw analyte concentration values), calibrated data, filtered data, transformed sensor data, and/or any other displayable sensor information, calibration information (e.g., reference BG values and/or prior calibration information such as from factory calibration), sensor diagnostic information, and the like.

[0198] The user interface **222** may include a variety of interfaces, such as one or more buttons **224**, a liquid crystal display (LCD) **226**, a vibrator **228**, an audio transducer (e.g., speaker) **230**, a backlight (not shown), and/or the like. The components that comprise the user interface **222** may provide controls to interact with the user (e.g., the host).

[0199] The battery **234** may be operatively connected to the processor module **214** (and possibly other components of the sensor electronics **12**) and provide the necessary power for the sensor electronics **112**. In other implementations, the receiver can be transcutaneously powered via an inductive coupling, for example.

[0200] A battery charger and/or regulator **236** may be configured to receive energy from an internal and/or external charger. In some example implementations, the battery **234** (or batteries) is configured to be charged via an inductive and/or wireless charging pad, although any other charging and/or power mechanism may be used as well.

[0201] One or more communication ports **238**, also referred to as external connector(s), may be provided to allow communication with other devices, for example a PC communication (com) port can be provided to enable communication with systems that are separate from, or integral with, the sensor electronics **112**. The communication port, for example, may comprise a serial (e.g., universal serial bus or "USB") communication port, and allow for communicating with another computer system (e.g., PC, personal digital assistant or "PDA," server, or the like). In some example implementations, factory information may be sent to the algorithm from the sensor or from a cloud data source.

[0202] The one or more communication ports **238** may further include an input port **237** in which calibration data may be received, and an output port **239** which may be employed to transmit calibrated data, or data to be calibrated, to a receiver or mobile device. FIG. **2** illustrates these aspects schematically. It will be understood that the ports may be separated physically, but in alternative implementations a single communication port may provide the functions of both the second input port and the output port.

[0203] In some analyte sensor systems, an on-skin portion of the sensor electronics may be simplified to minimize complexity and/or size of on-skin electronics, for example, providing only raw, calibrated, and/or filtered data to a display device configured to run calibration and other algorithms required for displaying the sensor data. However, the sensor electronics **112** (e.g., via processor module **214**) may be implemented to execute prospective algorithms used to generate transformed sensor data and/or displayable sensor information, including, for example, algorithms that: evaluate a clinical acceptability of reference and/or sensor data, evaluate calibration data for best calibration based on inclusion criteria, evaluate a quality of the calibration, compare estimated analyte values with time corresponding measured analyte values, analyze a variation of estimated analyte values, evaluate a stability of the sensor and/or sensor data, detect signal artifacts (noise), replace signal artifacts, determine a rate of change and/or trend of the sensor data, perform dynamic and intelligent analyte value estimation, perform diagnostics on the sensor and/or sensor data, set modes of operation, evaluate the data for aberrancies, and/or the like.

[0204] FIGS. **3**A, **3**B, and **3**C illustrate an exemplary implementation of analyte sensor system **101** implemented as a wearable device such as an on-skin sensor assembly **600**. As shown in FIG. **3**, on-skin sensor assembly comprises a housing **128**. An adhesive patch **126** can couple the housing **128** to the skin of the host. The adhesive **126** can be a pressure sensitive adhesive (e.g. acrylic, rubber based, or other suitable type) bonded to a carrier substrate (e.g., spun lace polyester, polyurethane film, or other suitable type) for skin attachment. The housing **128** may include a through-hole **180** that cooperates with a sensor inserter device (not shown) that is used for implanting the sensor **138** under the skin of a subject.

[0205] The wearable sensor assembly **600** can include sensor electronics **112** operable to measure and/or analyze glucose indicators sensed by glucose sensor **138**. Sensor electronics **112** within sensor assembly **600** can transmit information (e.g., measurements, analyte data, and glucose data) to a remotely located device (e.g., **114**, **116**, **118**, **120** shown in FIG. **1**). As shown in FIG. **3**C, in this implementation the sensor **138** extends from its distal end up into the through-hole **180** and is routed to an electronics module **135** inside the enclosure **128**. The working electrode **211** and reference electrode **212** are connected to circuitry in the electronics module **135** which includes the potentiostat.

[0206] FIG. **3**D illustrates one exemplary embodiment of an analyte sensor **138** which includes an elongated body portion. The elongated body portion may be long and thin, yet flexible and strong. For example, in some embodiments, the smallest dimension of the elongated conductive body is less than about 0.1 inches, 0.075 inches, 0.05 inches, 0.025 inches, 0.01 inches, 0.004 inches, or 0.002 inches. While the elongated conductive body is illustrated herein as having a circular cross-section, in other embodiments the cross-section of the elongated conductive body can be ovoid, rectangular, triangular, or polyhedral, star-shaped, C-shaped, T-shaped, X-shaped, Y-shaped, irregular, or the like.

[0207] In the implementation of FIG. **3**D, the analyte sensor **138** comprises a wire core **139**. At a distal, in vivo portion of the sensor **138**, the wire core **139** forms anelectrode **211***a*. At a proximal, ex vivo portion of the sensor **138**, the wire core **139** forms a contact **211***b*. The electrode **211***a* and the contact **211***b* are in electrical communication over the length of the wire core **139** as it extends along the elongated body portion of the sensor **138**. The wire core can be made from a single material such as platinum or tantalum, or may be formed as multiple layers, such as a conducting or non-conducting material with an outer coating of a different conducting material.

[0208] A layer **104** surrounds a least a portion of the wire core **139**. The layer **104** may be formed of an insulating material, such as polyimide, polyurethane, parylene, or any other known insulating materials. For example, in one embodiment the layer **104** is disposed on the wire core **139** and configured such that the electrode **211***a* is exposed via window **106**.

[0209] In some embodiments, the sensor **138** further comprises a layer **141** surrounding the insulating layer **104** like a sleeve that comprises a conductive material. At a distal, in vivo portion of the sensor **138**, the sleeve layer **141** forms an electrode **212***a*. At a proximal, ex vivo portion of the sensor **138**, the sleeve layer **141** forms a contact **212***b*. The electrode **212***a* and the contact **212***b* are in electrical communication over the length of the sleeve layer **141** as it extends along the elongated body portion of the sensor **138**. This sleeve layer **141** may be formed of a silver-containing material that is applied onto the insulating layer **104**. The silver-containing material may include any of a variety of materials and be in various forms, such as, Ag/AgCl-polymer pastes, paints, polymer-based conducting mixture, and/or inks that are commercially available, for example. This layer **141** can be processed using a pasting/dipping/coating step, for example, using a die-metered dip coating

process. In one exemplary embodiment, an Ag/AgCl polymer paste is applied to an elongated body by dip-coating the body (e.g., using a meniscus coating technique) and then drawing the body through a die to meter the coating to a precise thickness. In some embodiments, multiple coating steps are used to build up the coating to a predetermined thickness.

[0210] The sensor **138** shown in FIG. **3**D also includes a membrane **108** covering at least a portion of the distal in vivo portion of the sensor **138**. This membrane is typically formed of multiple layers, which may include one or more of an interference domain, an enzyme domain, a diffusion resistance domain, and a bioprotective domain. This membrane is important to support the electrochemical processes that allow analyte detection and it is generally manufactured with great care by dip-coating, spraying, or other manufacturing steps. It is preferable for the distal in vivo portion of the sensor **138** to be subject to as little handling as possible from the time the membrane **108** is formed to the time the distal in vivo portion of the sensor **138** is implanted into a subject. In some embodiments, electrode **211***a* forms a working electrode of an electrochemical measuring system, and electrode **212***a* forms a reference electrode for that system. In use, both electrodes may be implanted into a host for analyte monitoring.

[0211] Although the above description is applicable specifically to a coaxial wire type structure, the embodiments herein are also applicable to other physical configurations of electrodes. For example, the two electrodes **211***a* and **212***a* could be affixed to a distal in vivo portion of an elongated flexible strip of a planar substrate such as a thin, flat, polymer flex circuit. The two contacts **211***b* and **212***b* could be affixed to the proximal ex vivo portion of this flexible planar substrate. Electrodes **211***a*, **212***a* could be electrically connected to their respective contacts **211***b*, **212***b* a circuit traces on the planar substrate. In this case, the electrodes **211***a* and **212***a* and the contacts **211***b* and **212***b* may be adjacent to one another on a flat surface rather than being coaxial as shown in FIG. **3**D.

[0212] Also shown in FIG. **3**D is an illustration of the contact **211***b* and the contact **212***b* electrically coupled to a simple current-to-voltage converter based potentiostat **210**. The potentiostat includes a battery **320** that has an output coupled to an input of an operational amplifier **322**. The output of the operational amplifier **322** is coupled to a contact **324** that is electrically coupled to the working electrode contact **211***b* through a resistor **328**. The amplifier **322** will bias the contact **324** to the battery voltage V_b, and will drive the current i_m required to maintain that bias. This current will flow from the working electrode **211***a* through the interstitial fluid surrounding the sensor **138** and to the reference electrode **212***a*. The reference electrode contact **212***b* is electrically coupled to another contact **334** which is connected to the other side of the battery **320**. For this circuit, the current i_m is equal to $(V_b-V_m)/R$, where V_m is the voltage measured at the output of the amplifier **322**. The magnitude of this current for a given bias on the working electrode **211***a* is a measure of analyte concentration in the vicinity of the window **106**.

[0213] The contacts **324** and **334** are typically conductive pads/traces on a circuit board. There is always some level of parasitic leakage current i_p over the surface of this board during the test. If possible, this leakage current should not form part of the measurement of current due to analyte. To reduce the effect this leakage current has on the measured current, an optional additional pad/trace **336** may be provided between the biased contact **324** and the return contact **334** that is connected directly to the battery output. This optional additional pad/trace may be referred to as a "guard trace." Because they are held at the same potential, there will be essentially no leakage current from the biased contact **324** and the guard trace **336**. Furthermore, leakage current from the guard trace **336** to the return contact **334** does not pass through the amplifier output resistor **328**, and therefore is not included in the measurement. Additional aspects and implementations of a guard trace may be found in paragraphs **[0128]** and **[0129]** of U.S. Patent Publication 2017/0281092, which are incorporated herein by reference.

[0214] During manufacturing, various coating, testing, calibration, and assembly operations are performed on the sensor **138**. However, it can be difficult to transport individual sensors and electrically interface the sensors with multiple testing and calibration equipment installations. These processes also subject the sensors to damage from handling. To help address these issues, the sensor **138** may be provided as a part of a pre-connected sensor that includes a sensor carrier as described in greater detail below.

[0215] FIG. **4**A shows a schematic illustration of a pre-connected sensor **400**. As shown in FIG. **4**A, pre-connected sensor **400** includes sensor carrier **402** permanently attached to sensor **138**. In the example of FIG. **4**A, sensor carrier **402** includes an intermediate body such as substrate **404**, and also includes one or more contacts such as first internal contact **406**, and second internal contact **408**. First internal contact **406** is electrically coupled to a first contact on a proximal end of sensor **138** and contact internal contact **408** is electrically coupled to a second contact on the proximal end of sensor **138**. The distal end of sensor **138** is a free end configured for insertion into the skin of the host. Contacts **406** and **408** may, for example, correspond to contacts **324** and **334** of FIG. **3**D in some implementations.

[0216] As shown in FIG. **4**A, first internal contact **406** may be electrically coupled to a first external contact **410** and second internal contact **408** may be electrically coupled to a second external contact **412**. As described in further detail hereinafter, external contacts **410** and **412** may be configured to electrically interface with sensor electronics **112** in wearable device **600**. Furthermore, external contacts **410** and **412** may be configured to electrically interface with processing circuitry of manufacturing equipment such one or more testing stations and/or one or more calibration stations. Although various examples are described herein in which two external contacts **410** and **412** on the sensor carrier are coupled to two corresponding contacts on sensor **138**, this is merely illustrative. In other implementations, sensor carrier **402** and sensor **138** may each be provided with a single contact or may each be provided with more than two contacts, for example, any N number of external contacts (e.g., more than two external contacts **410** and **412**) of the sensor carrier and any M number of contacts (e.g., more than two contacts **406** and **408**) of sensor **138** that can be coupled. In some implementations, sensor carrier **402** and sensor **138** may have the same number of contacts (i.e., N=M). In some implementations, sensor carrier **402** and sensor **138** may have a different number of contacts (i.e., N≠M). For example, in some implementations, sensor carrier **402** may have additional contacts for coupling to or between various components of a manufacturing station.

[0217] As described in further detail hereinafter, substrate **404** may be configured to couple with sensor electronics **112** in wearable device **600**. In some embodiments, substrate **404** may be sized and shaped to mechanically interface with housing **128** and electrically interface with sensor electronics **112** inside housing **128**. Further, substrate **404** may be sized and shaped to mechanically interface with manufacturing equipment, assembly equipment, testing stations and/or one or more calibration stations. As described in further detail hereinafter, sensor carrier **402** may be attached and/or electrically coupled to sensor **138**. Sensor **138** may be permanently coupled to a component of sensor carrier **402** (e.g. substrate **404**) by using, for example, adhesive (e.g. UV cure, moisture cure, multi part activated, heat cure, hot melt, etc.), including conductive adhesive (e.g. carbon filled, carbon nanotube filled, silver filled, conductive additive, etc.), conductive ink, spring contacts, clips, wrapped flexible circuitry, a conductive polymer (e.g. conductive elastomer, conductive plastic, carbon filled PLA, conductive graphene PLA), conductive foam, conductive fabric, a barrel connector, a molded interconnect device structure, sewing, wire wrapping, wire bonding, wire threading, spot welding, swaging, crimping, stapling, clipping, soldering or brazing, plastic welding, or overmolding. In some embodiments, sensor **138** may be permanently coupled to substrate **404** by rivets, magnets, anisotropic conductive films, metallic foils, or other suitable structures or materials for mechanically and electrically attaching sensor carrier **402** to sensor **138** before or during assembly, manufacturing, testing and/or calibration operations. In some embodiments, sensor carrier **402** may be 3-D printed around sensor **138** to form pre-connected sensor **400**. Additionally, sensor carrier **402** may include datum features **430** (sometimes referred to as datum structures) such as a recess, an opening, a surface or a protrusion for aligning, positioning, and orienting sensor **138** relative to sensor carrier **402**. Sensor carrier **402** may also include, or may itself form, one or more anchoring features for securing and aligning the analyte sensor during manufacturing (e.g., relative to a manufacturing station). Additionally, sensor carrier **402** may include an identifier **450** configured to identify the sensor. In some embodiments, identifier **450** is formed on substrate **404**. Identifier **450** will be explained further below.

[0218] FIG. **4**B illustrates another schematic of a pre-connected analyte sensor **400**. The pre-connected analyte sensor **400** shown in FIG. **4**B may include similar components of pre-connected analyte sensor **400** shown in FIG. **4**A. FIG. **4**B is shown without optional cover **460** for clarity. FIG. **4**C illustrated an exploded view of pre-connected analyte sensor **400** shown in FIG. **4**B.

[0219] In the example of FIG. **4**B, sensor carrier **402** includes an intermediate body such as a substrate **404**, and also includes one or more traces such as first trace **414** and second trace **416**. First trace **414** may include a first internal contact **406** and a first external contact **410**. Second trace **416** may include a second internal contact **408** and a second external contact **412**. In some embodiments, first internal contact **406** is electrically coupled to a first contact on a proximal end of sensor **138** and second internal contact **408** is electrically coupled to a second contact on the proximal end of sensor **138**. The distal end of sensor **138** is a free end configured for insertion into the skin of the host. The electrical coupling is described in connection with various embodiments herein, such as clips, conductive adhesive, conductive polymer, conductive ink, metallic foil, conductive foam, conductive fabric, wire wrapping, wire threading or any other suitable methods. In some embodiments, a non-conductive adhesive **426** (e.g. epoxy, cyanoacrylate, acrylic, rubber, urethane, hot melt, etc.) can be used to attach the sensor **138** to substrate **404**. Non-conductive adhesive **426** may be configured to affix, seal, insulate, or provide a strain relief to the sensor **138**. Sensor **138** may be attached to substrate **404** by other methods, such as those described in FIG. **4**A above.

[0220] As shown in FIG. **4**C, a pressure sensitive adhesive **428** may be configured to isolate an exposed end of traces **414** and **416**. For instance, pressure sensitive adhesive **428** may laminate sensor **138** between substrate **404** and cover **460**. In such instances, sensor **138**, substrate **404**, pressure sensitive adhesive **428**, and cover **460** may form a laminated configuration. In the laminated configuration, sensor **138** and its connection to one or more contacts (e.g. first internal contact **406** and second internal contact **408**) are isolated from one or more exposed contacts (e.g. first external contact **410** and second external contact **412**). Furthermore, the laminated configuration may create a moisture sealed region surrounding the sensor **138**. The moisture seal may be created as embodied by a combination of a pressure sensitive adhesive **428** and a non-conductive adhesive **426**. In other embodiments, the laminated structure can be created by one or a combination of the following materials and methods: A non-conductive adhesive, a pressure sensitive adhesive tape, an elastomer, heat bonding, hot plate welding, laser welding, ultrasonic welding, RF welding, or any suitable type of lamination method. The cover **460** may consist of a polymer sheet, structure, or film that at least partially covers the substrate **404**. The cover **460** may optionally contain an identifier **450**, which can identify the sensor **138**. In some embodiments, identifier **450** may incorporate various identification protocols or techniques such as, but not limited to, NFC, RFID, QR Code, Bar code, Wi-Fi, Trimmed resistor, Capacitive value, Impedance values, ROM, Memory, IC, Flash memory, etc.

[0221] Guide fixture **420**, which is an optional component, is an exemplary embodiment of an interface with a work station, such as a testing station, a calibration station, an assembly station, a coating station, manufacturing stations, or as part of the wearable assembly. The guide fixture **420** includes datum features (or datum structures) **430**, such as a recess, an opening, a surface or a protrusion for aligning, positioning, and orienting sensor **138** relative to sensor carrier **402**. Datum features **430** may be used in manufacturing and for assembly into a wearable electronic component. In some embodiments, datum features **430** are raised protrusions configured to align with corresponding datum features **432** of substrate **404**. Corresponding datum features **432** of substrate **404** may feature cutouts, slots, holes, or recesses. The corresponding datum features **432** in the sensor carrier may be placement features that can interface with datum features **430** in a work station, such as a testing station, a calibration station, an assembly station, a coating station, or other manufacturing stations. Guide fixture **420** may be configured to ensure proper placement of the sensor carrier **402** to align the exposed external contacts **410** and **412** for connecting to a work station, such as a testing station, a calibration station, an assembly station, a coating station, or other manufacturing stations. In other embodi-

ments, datum features **430** may consist of female features to engage with male corresponding datum features **432**.

[0222] FIG. **4**D illustrates a schematic view of an array **480** of pre-connected analyte sensors **400** having a plurality of pre-connected sensors **400** with optional identifiers **450**. In FIG. **4**D, an array formed as a one-dimensional strip of pre-connected analyte sensors **400** is shown, but a two-dimensional array could also be implanted. In some embodiments, the array **480** of pre-connected analyte sensors may be disposed in a cartridge. Each of the plurality of pre-connected sensors **400** can be singulated. In some embodiments, scoring **4020** may be provided to facilitate singulation into individual pre-connected sensors **400**. In some embodiments, the array **480** can be used in facilitating manufacturing, testing and/or calibrating multiple sensors **138** individually in sequential or random manners. In some embodiments, the array **480** can be used in facilitating manufacturing, testing and/or calibrating multiple sensors **138** concurrently.

[0223] FIGS. **5**A-**5**E show block diagrams of various machines and assemblies the pre-connected analyte sensor **400** may be associated with during its pre-implant lifetime. Such machines and assemblies may include manufacturing equipment such as one or more manufacturing stations **5091**, one or more testing stations **5002** and/or one more calibration stations **5004**, and an on-skin wearable assembly **600**. At least some of these are configured to receive sensor carrier **402** and to communicatively couple the machines and assemblies to sensor **138** via sensor carrier **402**.

[0224] It is one aspect of some embodiments that the sensor **138** is coupled to the sensor carrier **402** before the membrane **108** described above is applied. With the sensor **138** attached to the sensor carrier, and potentially with multiple carrier mounted sensors attached together as shown in FIG. **4**D, subsequent device production steps such as membrane coating, testing, calibration, and assembly into a wearable unit can be performed with easier mounting and dismounting from manufacturing and testing equipment, less sensor handling, less chance of damaging the membrane, producing a significant overall improvement in production efficiency.

[0225] Another benefit of the pre-connected sensor construction is that it is easier to separate different kinds of manufacturing and testing among different facilities that are better equipped to handle them. For example, fabricating the electrodes may require various kinds of metal forming/extrusion machines, whereas membrane application, testing, and calibration requires a wet chemistry lab and sensitive electronic test equipment. Accordingly, the sensor electrodes may be formed and mounted on the carrier in one facility in one location, and then shipped to a different remote facility that is equipped for membrane application, testing, and calibration. Remote in this context means not in the same production facility in the same building. It can even be advantageous for different commercial entities to perform the different tasks that specialize in the appropriate manufacturing and testing technologies.

[0226] Manufacturing station **5091** may comprise a testing station as described herein, a calibration station as described herein, or another manufacturing station. Manufacturing station **5091** may include processing circuitry **5092** and/or mechanical components **5094** operable to perform testing operations, calibration operations, and/or other manufacturing operations such as sensor straightening operations, membrane application operations, curing operations, calibration-check operations, glucose sensitivity operations (e.g., sensitivity slope, baseline, and/or noise calibration operations), and/or visual inspection operations.

[0227] The pre-connected analyte sensor **400** may be connected to one or more testing stations **5002** having processing circuitry **5012** configured to perform testing operations with sensor **138** to verify the operational integrity of sensor **138**. Testing operations may include verifying electrical properties of a sensor **138**, verifying communication between a working electrode and contact **408**, verifying communication between a reference electrode or additional electrodes and contact **406**, and/or other electronic verification operations for sensor **138**. Processing circuitry **5012** may be communicatively coupled with sensor **138** for testing operations by inserting substrate **404** into a receptacle **5006** (e.g., a recess in a housing of testing station **5002**) until contact **410** is coupled to contact **5010** of testing station **5002** and contact **412** is coupled to contact **5008** of testing station **5002**.

[0228] System **5000** may include one or more calibration stations **5004** having processing circuitry **5020** configured to perform calibration operations with sensor **138** to obtain calibration data for in vivo operation of sensor **138**. Calibration data obtained by calibration equipment **5004** may be provided to on-skin sensor assembly **600** to be used during operation of sensor **138** in vivo. Processing circuitry **5020** may be communicatively coupled with sensor **138** for calibration operations by inserting substrate **404** into a receptacle **5014** (e.g., a recess in a housing of calibration station **5004**) until contact **410** is coupled to contact **5018** of testing station **5002** and contact **412** is coupled to contact **5016** of testing station **5002**.

[0229] In the examples of FIGS. **5**A-**5**E, testing station **5002** and calibration station **5004** include receptacles **5006** and **5014**. However, this is merely illustrative and sensor carrier **402** may be mounted to testing station **5002** and calibration station **5004** and/or manufacturing station **5091** using other mounting features such as grasping, clipping, or clamping figures. For example, manufacturing station **5091** includes grasping structures **5093** and **5095**, at least one of which is movable to grasp sensor carrier **402** (or a carrier having multiple sensor carriers and sensors). Structure **5093** may be a stationary feature having one or more electrical contacts such as contact **5008**. Structure **5095** may be a movable feature that moves (e.g., slides in a direction **5097**) to grasp and secure sensor carrier **402** in an electrically coupled position for manufacturing station **5091**. In other implementations, both features **5093** and **5095** are movable.

[0230] Sensor carrier **402** may also include an identifier **450** (see, e.g., FIGS. **4**A-**4**D). Identifier **450** may be formed on or embedded within substrate **404**. Identifier **450** may be implemented as a visual or optical identifier (e.g., a barcode or QR code pre-printed or printed on-the-fly on substrate **404** or etched in to substrate **404**), a radio frequency (RF) identifier, or an electrical identifier (e.g., a laser-trimmed resistor, a capacitive identifier, an inductive identifier, or a micro storage circuit (e.g., an integrated circuit or other circuitry in which the identifier is encoded in memory of the identifier) programmable with an identifier and/or other data before, during, or after testing and calibration). Identifier **450** may be used for tracking each sensor through the manufacturing process for that sensor (e.g., by storing a history of testing and/or calibration data for each sensor). In

other words, the identifier **450** identifies any of the analyte sensor, calibration data for the analyte sensor, and a history of the analyte sensor. For example, identifier **450** may be used for binning of testing and calibration performance data. Identifier **450** may be a discrete raw value or may encode information in addition to an identification number. Identifier **450** may be used for digitally storing data in non-volatile memory on substrate **404** or as a reference number for storing data external to sensor carrier **402**.

[0231] Testing station **5002** may include a reader **5011** (e.g., an optical sensor, an RF sensor, or an electrical interface such as an integrated circuit interface) that reads identifier **450** to obtain a unique identifier of sensor **138**. Testing data obtained by testing station **5002** may be stored and/or transmitted along with the identifier of sensor **138**.

[0232] Calibration station **5004** may include a reader **5011** (e.g., an optical sensor, an RF sensor, or an electrical interface) that reads identifier **450** to obtain a unique identifier of sensor **138**. Calibration data obtained by calibration station **5004** may be stored and/or transmitted along with the identifier of sensor **138**. In some implementations, calibration data obtained by calibration station **5004** may be added to identifier **450** by calibration station **5004** (e.g., by programming the calibration data into the identifier). In some implementations, calibration data obtained by calibration station **5004** may be transmitted to a remote system or device along with identifier **450** by calibration station.

[0233] As shown in FIGS. **5**A-**5**E and described in further detail hereinafter, on-skin sensor assembly **600** may include one or more contacts such as contact **5022** configured to couple internal electronic circuitry to contacts **410** and **412** of sensor carrier **402** and thus to sensor **138**. Sensor carrier **402** may be sized and shaped to be secured within a cavity **5024** in or on the housing **128** such that sensor **138** is coupled to electronics in the housing **128** via sensor carrier **402**, and sensor **138** may be positionally secured to extend from the housing **128** for insertion for in vivo operations.

[0234] Although one calibration station and one testing station are shown in FIGS. **5**A-**5**E, it should be appreciated that more than one testing station and/or more than one calibration station may be utilized in the manufacturing and testing phase of production. Although calibration station **5004** and testing station **5002** are shown as separate stations in FIGS. **5**A-**5**E, it should be appreciated that, in some implementations calibration stations and testing stations may be combined into one or more calibration/testing stations (e.g., stations in which processing circuitry for performing testing and calibration operations is provided within a common housing and coupled to a single interface **5006**).

[0235] Wearable assembly **600** may also include a reader (e.g., an optical sensor, an RF sensor, or an electrical interface) positioned near the contacts **5022** that reads identifier **450** to obtain a unique identifier of sensor **138**. Sensor electronics may obtain calibration data for in vivo operation of sensor **138** based on the read identifier **450**. The calibration data may be stored in, and obtained, from identifier **450** itself, or identifier **450** may be used to obtain the calibration data for the installed sensor **138** from a remote system such as a cloud-based system.

[0236] FIGS. **6**-**8** are schematic illustrations of various implementations of securement of a pre-connected sensor **400** within wearable assembly **600**. In the example of FIG. **6**, sensor carrier **402** is in direct contact with a base wall **605** and housing **128**, and contact **5022** includes multiple contacts on the housing **128** for contacting both contacts **410** and **412** of sensor carrier **402** (e.g., both located on a top surface of sensor carrier **402**). In the example of FIG. **7**, a mechanical receiver **700** is provided on base wall **605** for mechanically securing sensor carrier **402**. In the example of FIG. **8**, mechanical receiver **800** is provided on base wall **605** for mechanically securing sensor carrier **402** in cooperation with receiver **702**. In the example of FIG. **8**, receiver **702** includes an additional contact **704** for contacting contact **410** of sensor carrier **402** located on a rear surface of the sensor carrier.

[0237] FIG. **9** shows a detailed example of a sensor module **300** including a pre-connected sensor **400** and a sealing structure **192**. As shown, sealing structure **192** may be disposed on a substrate **404**, in which sealing structure **192** may be configured to prevent moisture ingress toward contacts **410** and **412**. Furthermore, contacts **410** and **412** may be implemented as leaf spring contact for coupling to sensor electronics. In some embodiments, pre-connected sensor **400** includes at least one contact. In some embodiments, pre-connected sensor **400** includes at least two contacts. In some embodiments, pre-connected sensor **400** includes at least three contacts. In some embodiments, pre-connected sensor **400** includes at least four contacts. An adhesive **126** can couple the housing **128** to the skin **130** of the host. The adhesive **126** can be a pressure sensitive adhesive (e.g. acrylic, rubber based, or other suitable type) bonded to a carrier substrate (e.g., spun lace polyester, polyurethane film, or other suitable type) for skin attachment. As shown in FIG. **9**, substrate **404** may include at least one arm **202** or other mechanical features for interfacing with corresponding mating features on base **128** (e.g., mechanical interlocks such as snap fits, clips, and/or interference features) to mechanically secure substrate **404** to housing **128**. Coupling features such as arm **902** and/or other features of substrate **404** may be sized and shaped for releasably mechanically attaching substrate **404** to a connector associated with manufacturing equipment such as one or more of connectors **5006**, **5014**, and/or **5093**/**5095** of FIGS. **5**A-**5**E for testing and/or calibration operations during manufacturing and prior to attachment to features **900** of housing **128**.

[0238] FIG. **10** illustrates a perspective view of the sensor module **400** in an implementation in which contacts **406** and **408** are implemented using coil springs **306**. In the example of FIG. **10**, protrusions **308** on substrate **404** can align sensor **138** and secure springs **306** to substrate **404**. (Not all the protrusions **308** are labeled in order to increase the clarity of FIG. **10**.) Protrusions **308** can protrude distally.

[0239] At least three, at least four, and/or less than ten protrusions **308** can be configured to contact a perimeter of a spring **306**. Protrusions **308** can be separated by gaps. The gaps enable protrusions **308** to flex outward as spring **306** is inserted between protrusions **308**. A downward force for coupling electronics unit **500** to base **128** can push spring **306** against sensor **138** to electrically couple spring **306** to the sensor **138**. Sensor **138** can run between at least two of protrusions **308**. Testing station **5002** and/or calibration station **5004** may also have a mating connector structure that, when substrate **404** is inserted into recess **5006** or **5014**, compresses springs **306** to couple springs **306** electrically between sensor **138** and processing circuitry **5012** or **5020**.

[0240] Sensor **138** may include a distal portion **138***a* configured for subcutaneous sensing and a proximal portion

138*b* mechanically coupled to sensor carrier **402** having an electrical interconnect (e.g., springs **306**) mechanically coupled to the substrate **404** and electrically coupled to proximal portion **138***b*. Springs **306** can be conical springs, helical springs, or any other type of spring mentioned herein or suitable for electrical connections.

[0241] Substrate **404** may have a base portion **312** that includes at least two proximal protrusions **308** located around a perimeter of spring **306**. Proximal protrusions **308** are configured to help orient spring **306**. A segment of glucose sensor **138** is located between the proximal protrusions **308** (distally to the spring **306**).

[0242] Base portion **312** may be configured to be mechanically coupled to the housing **128**, to manufacturing equipment **5091**, testing equipment **5002**, and/or calibration equipment **5004**. For example, base portion **312** includes anchoring features such as arms **202**. Anchoring features may include arms **202** and/or may include features such as one or more notches, recesses, protrusions, or other features in base **312**, arms **202**, and/or substrate **404** that mechanically interface with corresponding features of, for example, a receptacle such as one of receptacles **5006** of **5014** of FIGS. **5**A-**5**E or a clamping connector formed by clamping connector features such as features **5093** and **5095** of FIGS. **5**A-**5**E to secure and align sensor **138**. In one suitable example, a slidable (or otherwise actuable or rotatable) feature such as feature **5095** of FIGS. **5**A-**5**E may be arranged to slide over, around, or otherwise engage with one or more of arms **202**, base **312**, and/or sensor carrier **402** altogether to secure sensor carrier **402** to the manufacturing equipment. For example, in other implementations of sensor carrier **402** in which arms **202** are not provided, a receptacle connector such as one of receptacles **5006** of **5014** of FIGS. **5**A-**5**E or a clamping connector formed by clamping connector features such as features **5093** and **5095** of FIGS. **5**A-**5**E may include a clamshell component, a sliding component, or other movable component that bears against or covers sensor carrier **402** to latch sensor carrier **402** to the manufacturing, testing, and/or calibration equipment.

[0243] Referring now to FIGS. **11** and **12**, another implementation of sensor module **400** is shown that includes a base portion **312***d*; a glucose sensor **138** having a distal portion **138***a* configured for subcutaneous sensing and a proximal portion **138***b* mechanically coupled to base portion **312***d*; and an electrical interconnect (e.g., leaf springs **306***d*) mechanically coupled to substrate **404** and electrically coupled to the proximal portion **138***b*. Leaf springs **306***d* can be configured to bend in response to pressure from testing station contacts, calibration station contacts, and/or electronics unit **500** coupling with base **128** while pre-connected sensor **400** is disposed between electronics unit **500** coupling with base **128**.

[0244] As used herein, cantilever springs are a type of leaf spring. As used herein, a leaf spring can be made of a number of strips of curved metal that are held together one above the other. As used herein in many embodiments, leaf springs only include one strip (e.g., one layer) of curved metal (rather than multiple layers of curved metal). For example, leaf spring **306***d* in FIG. **11** can be made of one layer of metal or multiple layers of metal. In some embodiments, leaf springs include one layer of flat metal secured at one end (such that the leaf spring is a cantilever spring).

[0245] As shown in FIGS. **11** and **12**, base portion **312***d* includes a proximal protrusion **320***d* having a channel **322***d* in which at least a portion of proximal portion **138***b* is located. The channel **322***d* positions a first area of proximal portion **138***b* such that the area is electrically coupled to leaf spring **306***d*.

[0246] As shown in the cross-sectional, perspective view of FIG. **12**, leaf spring **306***d* arcs away from the first area and protrudes proximally to electrically couple with testing station **5002**, calibration station **5004**, and/or wearable assembly **600**. At least a portion of leaf spring **306***d* forms a "W" shape. At least a portion of leaf spring **306***d* forms a "C" shape. Leaf spring **306***d* bends around the proximal protrusion **320***d*. Leaf spring **306***d* protrudes proximally to electrically couple testing station **5002**, calibration station **5004**, and/or electronics unit **500**. Seal **192** is configured to impede fluid ingress to leaf spring **306***d*.

[0247] Leaf spring **306***d* is oriented such that coupling sensor carrier **402** to testing station **5002**, calibration station **5004**, and/or electronics unit **500** presses leaf spring **306***d* against a first electrical contact of the testing station **5002**, calibration station **5004**, and/or electronics unit **500** and a second electrical contact of the glucose sensor **138** to electrically couple the glucose sensor **138** to the testing station **5002**, calibration station **5004**, and/or electronics unit **500**. The proximal height of seal **192** may be greater than a proximal height of leaf spring **306***d* such that the testing station **5002**, calibration station **5004**, and/or electronics unit **500** contacts the seal **192** prior to contacting the leaf spring **306***d*. Springs **306** and/or leaf springs **306***d* may cooperate with underlying features on substrate **404** (e.g., features **308**) and/or channel **322***d*, as shown, to form datum features that secure and align sensor **138** with respect to sensor carrier **402** (e.g., for manufacturing, calibration, testing, and/or in vivo operations).

[0248] FIGS. **13**A and **13**B show perspective views of an embodiment of a wearable assembly **600** including a pre-connected sensor **400**. Wearable assembly **600** may include sensor electronics and an adhesive patch (not shown). Pre-connected sensor **400** may include a sensor carrier such as sensor carrier **402** described in FIGS. **4**A-**4**D. The sensor carrier **402** may be placed in or on housing **128**. Housing **128** may be composed of two housing components, top housing **520** and bottom housing **522**. Top housing **520** and bottom housing **522** can be assembled together to form housing **128**. Top housing **520** and bottom housing **522** can be sealed to prevent moisture ingress to an internal cavity of housing **128**. The sealed housing may include an encapsulating material (e.g. epoxy, silicone, urethane, or other suitable material). In other embodiments, housing **128** is formed as a single component encapsulant (e.g. epoxy) configured to contain sensor carrier **402** and sensor electronics. FIG. **13**A illustrates an aperture **524** within top housing **520** configured to allow for an insertion component (e.g. hypodermic needle, C-needle, V-needle, open sided needle, etc.) to pass through the wearable assembly **600** for insertion and/or retraction. Aperture **524** may be aligned with a corresponding aperture in bottom housing **522**. In other embodiments, aperture **524** may extend through an off-center location of housing **128**. In other embodiments, aperture **524** may extend through an edge of the housing **128**, forming a C-shaped channel. In some embodiments the aperture **524** includes a sealing material such as a gel, adhesive, elastomer, or other suitable material located within aperture **524**.

[0249] FIG. **13**B shows a perspective view of the bottom of wearable assembly **600**. As illustrated, pre-connected

sensor **400** may be disposed within the housing **128**. Pre-connected sensor **400** may be installed within an aperture **526** of bottom housing **522**. As shown in the figure, sensor **138** may extend out from aperture **526**. Aperture **526** may be sized and shaped to retain pre-connected sensor **400**. Furthermore, aperture **526** may be sized and shaped to retain pre-connected sensor **400** in which sensor **138** extends approximately parallel to the skin surface and forms a 90 degree bend for insertion into the skin. It should be understood that the bottom surface of bottom housing **522** can contain an attachment member (e.g. an adhesive patch) for adhering the wearable assembly to the skin surface of a user.

[0250] FIG. **13**C shows an exploded view of the wearable assembly **600**. Various electronic components such as the potentiostat **210** and other components illustrated in FIG. **2** may be mounted on or to an electronics assembly substrate **530**, typically some form of printed circuit board. It is contemplated that sensor carrier **402** has an electrical coupling with electronics assembly substrate **530**. Various methods may be used to establish electrical connection (e.g. pins, solder, conductive elastomer, conductive adhesive, etc.) between one or more contacts of pre-connected sensor **400**, such as external contacts **410** and **412** and electronics assembly substrate **530**. Sensor carrier **402** may be configured to interface with electronics assembly substrate **530** through the bottom housing **522**. In other implementations, the sensor carrier **402** may be configured to interface with the electronics assembly substrate **530** through top housing **520**. In some other implementations, the sensor carrier **402** is configured to interface with the electronics assembly substrate **530** through the side of wearable assembly **600**. Also shown in the figure, an optional sealing member **528** may be configured to insulate at least a portion of sensor carrier **402** from potential moisture ingress. In some instances, the sealing member **528** may be liquid dispensed (e.g., adhesive, gel) or a solid material (e.g., elastomer, polymer). The sealing member **528** may be an assembled component that is welded (e.g., laser or ultrasonic, hot plate), or otherwise permanently attached (e.g., anisotropic adhesive film, pressure sensitive adhesive, cyanoacrylate, epoxy, or other suitable adhesive) to create a sealed region. The sealing member **528** may be used to physically couple and/or provide a sealed region for the sensor carrier **402** to the wearable assembly **600**.

[0251] FIGS. **14**A-**14**E illustrate another implementation of a wearable assembly **600**. The implementation of FIGS. **14**A-**14**E share some similarities to the implementation shown in FIGS. **13**A-**13**C. As illustrated in FIG. **14**A, the wearable assembly **600** includes a housing formed as a top housing **520** and a bottom housing **522**. The wearable assembly also includes a through hole **524** for use during interstitial insertion of the sensor **138** into a subject. Referring especially to FIGS. **14**B, C, and D, the bottom housing **522** includes a recess **726** with a floor **704**. The floor **704** may include locating pins **784** and **786** that extend upward from the floor **704** and two apertures **722** and **724**. The locating pins may be formed as an integral part of the floor **704**, during for example molding of the housing, or they may be separate parts that are coupled to the floor with friction fit, adhesive, or any other means. In some embodiments, there is at least one locating pin. In some embodiments, there are at least two locating pins. In some embodiments, there are at least three locating pins. On the opposite side of the floor **704** is a printed circuit board **530** (visible in FIG. **14**E) with some or all of the sensor electronic circuitry (e.g. the potentiostat **210** or at least traces that connect to the potentiostat) mounted thereon. The printed circuit board **530** may also have conductive pins **712** and **714** mounted thereon which extend through apertures **722** and **724** in the floor **704**, forming an external electrical interface that is accessible without opening the housing. The pre-connected sensor **400** drops into this recess **726**. Holes **794** and **796** drop over locating pins **784** and **786** and conductive pins **712** and **714** extend through holes **706** and **708** in the sensor carrier substrate **404**. These holes **706** and **708** extend through plated metal (e.g. copper) contacts **406** and **408** on the substrate **404**, similar to those shown in a different embodiment in FIGS. **4**A to **4**C. Generally, the number of holes **706**, **708** in the substrate **404** correspond to the number of electrodes present in the sensor **138**, which may in turn correspond to the number of pins **712**, **714**. For example, a three-electrode system with a working, reference, and counter electrode may have three holes in the substrate corresponding to three pins extending up through floor **704**. The pins **712** and **714** may be electrically connected to the contacts **408** and **406** in a variety of ways such as solder, swaging, or conductive glue, paste, adhesive, or film. After this connection is made, the electronic circuitry for detecting and/or processing analyte sensor signals that is placed inside the housing becomes connected to the analyte sensor to receive signals therefrom. The connection material bonding the sensor **138** to the sensor carrier **402** is designated **762** and **764** in FIGS. **14**D and **14**E. These connections may be established by any of the methods described above with reference to FIG. **4**A.

[0252] Once the substrate **404** is placed over the pins **712**, **714**, the proximal portion of the sensor **138** can be secured to the floor **704** with a pressure sensitive adhesive **772** to retain the proximal portion of the sensor on or near the housing prior to extending downward at the inserter opening **524**. This allows for accurate sensor insertion position and controls the bias force into the insertion needle. A variety of methods and/or structural features may be used to perform this retention function such as a protrusion or shelf in the floor **704**, an overmolded part, a snap-fit additional plastic piece installed over the sensor, or any sort of glue or adhesive placed before or after the pre-connected sensor is placed in the recess **726**. As is also shown in FIG. **13**C, optional sealing members **528***a* and **528***b* may be configured to seal and insulate at least a portion of sensor carrier **402** from potential moisture ingress. In some instances, the sealing member **528** may be liquid dispensed (e.g., adhesive, gel) or a solid material (e.g., elastomer, polymer). The sealing member **528** may be an assembled component that is welded (e.g., laser or ultrasonic, hot plate), or otherwise permanently attached (e.g., pressure sensitive adhesive, cyanoacrylate, epoxy, or other suitable adhesive) to create a sealed region. The sealing member **528** may be used to physically couple and/or provide a sealed region for the sensor carrier **402** to the wearable assembly **600**. The two sealing members **528***a* and **528***b* are partially separated by walls **766** and **768**. These walls allow two different sealing methods to be used in the two different portions of the recess **726** that are separated by the walls. For example, **528***b* may be a solid polymer that is press fit into the recess portion with opening **524** on one side of the walls. The other portion of the recess **726** may then be filled with a liquid UV cured epoxy which hardens to form sealing member **528***a*. The

depth of the two recess portions on either side of the walls may be the same or different.

[0253] FIG. **15**A shows an alternative embodiment of a sensor carrier **402**, also potentially taking the form of a printed circuit board. In this implementation, a guard trace **407** such as described above with reference to item **336** in FIG. **3**D is provided on the substrate **404** of the sensor carrier **402**. As explained above, this guard trace **407** is positioned between contacts **406** and **408** and is connected to the bias voltage by the sensor electronics. The guard trace **407** can be coupled to the sensor electronics with or more conductive pins **713** (not shown in FIGS. **14**A to **14**E) that extend through the floor **704** similar to pins **712** and **714**. In FIG. **15**A, the pins are shown connected to castellated contacts on the side of the substrate **404**. An insulating layer **780** such as solder mask may be positioned over the guard trace **407** to eliminate the risk of the analyte sensor electrodes shorting to it.

[0254] FIGS. **15**B and **15**C illustrated other implementations of connecting a sensor carrier **402** having an analyte sensor **138** mounted thereon to electronic circuitry internal to a wearable sensor. In FIG. **15**B, the sensor **138** is coupled to the sensor carrier **402** with conductive adhesive **762** and **764** as shown above with reference to FIGS. **14**C and **14**D. On the other side of the sensor carrier substrate are conductive contact pads **812** and **814**. The circuit board **530** also has contact pads **826** and **828** bonded thereto and which are accessible through the floor **704** of the recess **726**. An anisotropic film **820** is used to electrically and mechanically bond the sensor carrier contact **812** to circuit board contact **826** and also sensor carrier contact **814** to circuit board contact **828**. The anisotropic film **820** is compressed with heat between the contacts, which makes conductive particles in the film **820** bridge the gap vertically between the contact pairs **812**/**826** and **814**/**828**. The conductive particles in the film **820** are spaced apart horizontally, so no shorting between the contact pairs occurs. This electrical and mechanical bonding technique has found widespread use in display applications for small electronics such as smart phones and lends itself to easy and consistent connections in production environments.

[0255] In FIG. **15**C, the proximal region of sensor **138** is coupled to the sensor carrier **402** contacts **812** and **814** with anisotropic film **820**. A different area of the same anisotropic film **820** may be used to connect the sensor carrier contacts **812** and **814** to circuit board contacts **826** and **828** respectively. In this implementation, the area of the film **820** that connects the sensor **138** to the contacts **812** and **814** may be horizontally adjacent to or otherwise separated from the area of the film **820** that connects the circuit board contacts **826** and **828** to the sensor carrier contacts **812** and **814**.

[0256] In the examples of FIGS. **10**-**15**, pre-connected sensor **400** can be installed as a standalone interface between sensor **138** and the sensor electronics. However, it should be appreciated that, in some implementations described herein, pre-connected sensor **400** may include a sensor carrier that couples to an additional interface between the sensor **138** and the sensor electronics inside the wearable assembly **600**. For example, channel **322***d* and leaf spring **306***d* can be formed on separate substrate that, following calibration and testing operations, mechanically attaches to base portion **312***d* within seal **192** for installation into wearable assembly **600**.

[0257] It is one benefit of the analyte sensor connection techniques described above that the fabrication of the pre-connected sensor **400** may be separated from the fabrication of the electronics enclosed within the housing. As described above with reference to the pre-connected sensor structure and the subsequent coating, testing and calibrating processes, the housing with the internally contained electronics can be manufactured in a separate facility from the one that attaches the pre-connected sensor **400** to the sensor electrical interface. This is made possible by providing an analyte sensor electronics interface that is accessible from outside the housing. The housing need not be opened to attach the sensor.

[0258] In some advantageous methods, the electrodes for the pre-connected sensor are fabricated and mounted on the substrate in a first location and are shipped to a second location for coating testing and calibrating. The housing with internal electronics is manufactured in a third location. The housing with the electronics is shipped from the third location to the second location, where the completed analyte sensor is attached to the external electrical interface. The three locations can all be remote from each other. This minimizes handling of the sensitive membrane coated sensor, but still allows separate manufacturing of the other components of the complete device.

[0259] FIG. **16** shows a top view of an implementation of sensor carrier **402** in which substrate **404** is a substantially planar substrate and sensor **138** is attached to substrate **404** with a conductive adhesive **1500**. As shown in FIG. **16**, conductive adhesive **1500** may be applied to contacts **1000** and **1002** of sensor **138** to mechanically attach sensor **138** to substrate **404**. Once applied the conductive adhesive **1500** on contacts **1000** and **1002**, may itself form contacts **408** and **406** for coupling to testing station **5002**, calibration station **5004**, and/or electronics unit **500**. FIG. **17** shows an end view of sensor carrier **402** of FIG. **16** in which conductive adhesive **1500** can be seen covering a portion of sensor **138** at the proximal end. In other embodiments, sensor **138** may be attached to substrate **404** with a conductive adhesive **1500**, or via any other suitable methods via the use of, for example, clips, conductive polymer, metallic foil, conductive foam, conductive fabric, wire wrapping, wire threading or via any other suitable methods.

[0260] FIGS. **18**, **19**, and **20** show examples of substrate **404** of FIG. **16**, with additional datum features for controlling the position and spatial orientation of sensor **138** on substrate **404**. In the example of FIG. **18**, substrate **404** includes a v-shaped recess **1700**. Sensor **138** is disposed partially within recess **1700** to orient sensor **138** in a direction along the recess, and conductive adhesive **1500** substantially covers sensor **138** and fills in portions of recess **1700** not filled by sensor **138** to secure sensor **138** within the recess. In the example of FIG. **19**, substrate **404** includes a first planar portion **1800** and a second planar portion **1802** extending at a non-parallel (e.g., perpendicular) angle with respect to the first planar portion, and sensor **138** is attached at the interface of the first and second planar portions by conductive adhesive **1500**. In the example of FIG. **20**, substrate **404** includes a rounded recess **1900** in which sensor **138** is attached by conductive adhesive **1500** that substantially covers sensor **138** and fills in portions of recess **1700** not filled by sensor **138** to secure sensor **138** within the recess.

[0261] FIGS. **21**A and **21**B show an example sensor carrier **402** with at least one pair of guide structures **2106** and **2108** formed on the substrate **404**, such as on one or both contacts **406** and **408**. These guide structures can assist placement of the sensor body **138** on the appropriate location when applying conductive adhesive to bond the two together. This can eliminate the need for external guide fixtures when assembling the sensor to the sensor carrier during manufacturing. The structures **2106**, **2108** can be made of solder or other conductive adhesive. Although not shown in FIGS. **21**A and **21**B, an additional adhesive bonding material can be provided between the guide structures to fix the sensor to the guide structures during manufacturing.

[0262] Conductive adhesive **1500** may be, for example, a conductive liquid dispensed glue. The conductive liquid dispensed glue may be a one or two-part adhesive that cures (e.g., at room temperate or an elevated curing temperate). The conductive liquid dispensed glue may be a snap-cure adhesive. A two-part conductive liquid dispensed glue may include a base adhesive (e.g., epoxy, polyurethane, etc.) and a conductive filler (e.g., silver, carbon, nickel, etc.). Conductive adhesive **1500** may include, for example, an adhesive resin with one or more embedded conductive materials such as silver, copper or graphite. Conductive adhesive **1500** may be a heat curable conductive adhesive.

[0263] FIG. **22** shows a top view of an implementation of sensor carrier **402** in which substrate **404** is a substantially planar substrate and sensor **138** is attached to substrate **404** with a conductive tape **2000**. As shown in FIG. **22**, conductive tape **2000** may be applied to one or more contacts (e.g. connection areas **1000** and **1002**) of sensor **138** to mechanically attach sensor **138** to substrate **404**. Once applied the conductive tape **2000** on contacts **1000** and **1002**, may itself form contacts **408** and **406** for coupling to testing station **5002**, calibration station **5004**, and/or electronics unit **500**. Tape **200** may be applied over sensor **138** as shown in FIG. **22**, or may be interposed between substrate **404** and sensor **138**. In implementations in which tape **2000** is disposed between substrate **404** and sensor **138**, substrate **404** may be a flexible substrate that can be rolled or folded around sensor **138** as shown in the end view of FIG. **23**. The rolled substrate of FIG. **23** includes extending portions **2100** that can form one or more contacts (e.g. **406** or **408**).

[0264] Conductive tape **2000** may be configured for use as a multi-zoned tape with one or more conductive tapes **2000** and non-conductive tape sections. The combination of conductive and non-conductive regions can be used to electrically isolate connection regions. Using a multi-zoned tape may simplify the assembly of multiple connection regions in a single assembly step. The pitch of the conductive regions on the tape may be matched to the targeted connection area of the sensor wire **138**. In other embodiments the pitch of the conductive region of the tape is significantly less than the spacing of the targeted connection area of the sensor wire **138**. A shorter pitch may allow for more variability in tape placement while ensuring isolated connection between the sensor **138** and the substrate **404**. Conductive tape **2000** may be formed from a polymer substrate with a conductive adhesive (e.g. carbon-impregnated adhesive, metal-impregnated adhesive). As another example, conductive tape **2000** may be a metallic substrate with conductive and non-conductive adhesive. Some examples of non-conductive substrates are polyimide, composite, polymers, etc. Some examples of conductive substrates are metals (e.g. Foils, plating, cladding, etc), conductive polymers, and conductive elastomers. Examples of non-conductive adhesive are epoxy, cyanoacrylate, acrylic, rubber, urethane, hot melt, etc. Examples of conductive adhesives are carbon filled adhesive, nano particle filled adhesive, metal filled adhesive (e.g. silver), conductive inks, etc.

[0265] FIG. **24** shows a top view of an implementation of sensor carrier **402** in which substrate **404** is a substantially planar substrate and sensor **138** is attached to substrate **404** with a conducive plastic **2200** welded or bonded to a non-conductive (e.g., plastic) substrate **404**. As shown in FIG. **24**, conductive plastic **2200** may be applied to contacts **1000** and **1002** of sensor **138** to mechanically attach sensor **138** to substrate **404**. Once applied the conductive plastic **2200** on contacts **1000** and **1002**, may itself form contacts **408** and **406** for coupling to testing station **5002**, calibration station **5004**, and/or electronics unit **500**.

[0266] FIGS. **25** and **26** show an exemplary ultrasonic welding system for welding conductive plastic **2200** to substrate **404**. As shown in FIG. **25**, substrate **404** may be provided with a recess within which a protrusion on a conductive plastic member **2200** can be received. Sensor **138** may be disposed within a recess in the protrusion on conductive plastic member **2200** and conductive plastic member **2200** can be pressed in direction **2302** and vibrated by ultrasonic welding horn **2300** to form a melt region **2400** that, when horn **2300** is removed, solidifies to secure sensor **138** between substrate **404** and conductive plastic **2200** to form a conductive contact to sensor **138**.

[0267] In some implementations, in order to provide a sensor **138** with additional surface area for clipping or soldering of contacts to substrate **404**, the proximal end of sensor **138** may be rolled or otherwise flattened as shown in FIG. **27**. As shown in FIG. **27**, contacts **1000**F and **1002**F may be flat contacts that converge into a cylindrical wire sensor **138**. As shown in the side view of sensor carrier **402** in FIG. **28**, flattened contacts **1000**F and **1002**F may be attached to substrate **404** with conductive attachment members **2600** and **2602** such as clips, solder welds, an anisotropic conductive film, a conductive tape, a plastic member with embedded conductors, conductive springs, or elastomeric conductive members (as examples).

[0268] In one example, connectors such as contacts **1000**F and **1002**F (and/or other forms of contacts **1000** and **1002** described herein) may be laser soldered to corresponding contacts on substrate **404**. In implementations in which sensor **138** is laser soldered to substrate **404**, a trace surface of substrate **404** may be preheated by laser illumination at a soldering location. The surface heat emission may reflow a pre-deposited solder material on either side of sensor **139**. A guide such as a borosilicate glass "angle" may be placed over the sensor and per-deposited solder to retain the solder, driving molten solder towards the sensor. A resulting "cradle" bond may then securely anchor the sensor to the trace on substrate **404** which may help increase or maximize a trace-to-solder-sensor contact wire bonding area. Use of a guide such as a borosilicate glass angle may also protect printed circuit board assembly electronics that may be included on and/or in the substrate from solder debris during the hot portion of the soldering process.

[0269] In another example, connectors such as contacts **1000**F and **1002**F (and/or other forms of contacts **1000** and **1002** described herein) may be soldered to corresponding

contacts on substrate **404** without a laser. In these example, solder wire may be pre-fed onto a tip of a soldering iron to build up a blob of molten solder on the tip. The iron may then be moved down so the blob touches the sensor and conductive trace on the substrate. A coating on the sensor such as the Ag/AgCl coating described herein may be provided with a low thermal mass such that the sensor coating heats up quickly without freezing the solder. Once the coating is heated, the solder wets to the coating. The trace would also have minimal thermal mass so it will heat up quickly without freezing the solder. A solder mask may be provided around the trace that prevents the solder flowing off the edge of the trace.

[0270] In some implementations, substrate **404** may be formed, at least in part, by a flexible circuit (e.g., a polyimide substrate having conductive traces or other suitable flex circuit) that folds over and/or around at least a portion of sensor **138** to conductive traces of the flex circuit. FIG. **29** shows a top view of a flex circuit implementation of substrate **404** in which substrate **404** is a flexible circuit having a central, non-conductive, elongated portion **2702** along which sensor **138** is oriented and having upper and lower extensions **2700** and **2704** that extend from central portion in a directed perpendicular to the elongated dimension of central portion **2702**. Extensions **2700** and **2704** respectively include conductive contacts **2706** and **2708** that form contacts **408** and **406**. Conductive contacts **2706** and **2708** may be coupled, via traces and/or conductive vias on or within substrate **404** to external contacts that form contacts **412** and **410**. In some instances, extensions **2700** and **2704** may allow for testing, calibration, sensor electronics or other equipment to connect to sensor carrier/sensor assembly in area that is not occupied by the sensor. This may allow for additional connection types and/or improve electrical coupling of connection.

[0271] FIG. **30** shows an implementation of sensor carrier **402** in which substrate **404** includes a wedge-shaped base portion **2800** and a foldable flexible portion **2802**. Conductive contacts **2804** may extend from base portion **2800** to foldable portion **2802** so that, when sensor **138** is placed on base portion **2800** and optionally foldable portion **2802** is be folded over sensor **138** (e.g., in direction **2820**) to wrap over and around sensor **138**, contacts **410** and **412** electrically couple to sensor **138**. Base portion **2800** may be rigid and may taper in a direction away from sensor **138**. Base portion **2800** may include conductive contacts **410** and **412** at a narrow end. Base portion **2800** may, for example, be removably inserted into recesses **5006** and **5014** of testing station **5002** and calibration station **5004** for testing and calibration operations. In the examples of FIGS. **27** and **28**, the flexible substrate may be folded over the sensor and secured (e.g., to the sensor and/or to itself to secure the sensor by a welding soldering, a mechanical crimp, spring contacts, rivets, adhesive such as epoxies, or the like.

[0272] FIGS. **31**A and **31**B illustrate another embodiment of a sensor carrier **402**. In this embodiment, the sensor carrier **402** comprises a block **404** made of non-conducting material such as a polymer or ceramic. The block **404** includes a through-hole **1420** extending therethrough along the y-axis through which the proximal ex vivo portion of the analyte sensor **138** extends. Slots or blind holes **1410** and **1412** intersect the through-hole **1420** on an orthogonal z-axis to the through hole y-axis. Conductive contact material **406** and **408** is plated on the top surface and extends into the slots **1410** and **1412**. Additional holes **1430** and **1432** extending along the x-axis intersect both the through-hole **1420** and the slots **1410** and **1412**. Each hole **1430** and **1432** extends across its respective slot and partway into the block on the other side of each slot forming a blind hole or depression **1442**, **1444** on the other side. Plugs **1451** and **1453**, which may be conductive or non-conductive are inserted into the holes **1430** and **1432** and push the contacts **212***b* and **211***b* of the wire analyte sensor into the depressions **1442**, **1444**, causing the contacts **212***b* and **211***b* to come into electrical contact with the sensor carrier contacts **406** and **408**.

[0273] FIG. **32** shows a top view of a sensor carrier having a substrate **404**, a datum feature **2900**, and a movable connector **2902** for each of contacts **406** and **408**. Sensor **138** may be aligned against datum features **2900** and movable connectors **2902** may be moved to secure each of contacts **1000** and **1002** between the corresponding datum feature and movable connector. Movable connectors **2902** and/or datum features **2900** conductively couple to contacts **1000** and **1002**. Movable connectors **2902** and/or datum features **2900** may be conductively coupled to other contacts (not shown) on substrate **404** that form contacts **410** and **412**. FIG. **33** is a perspective view of one of datum features **2900** and an associate movable contact **2902**, movable in a direction **2904** toward datum feature **2900** to secure sensor **138**. Contacts **1000** and **1002** may be flattened to enhance contact with datum feature **2900** and contact **2902**. Additional conductive material **2906** may be formed on substrate **404** between datum feature **2900** and contact **2902** to enhance electrical contact with sensor **138** if desired. The additional conductive material may be an exposed surface of a portion of an embedded conductive layer (e.g., a copper or other conductive metal layer) within substrate **404** or may be solder or a conductive adhesive (as examples).

[0274] FIG. **34** shows a perspective view of a pre-connected sensor formed from a sensor carrier implemented as a barrel connector that substantially surrounds sensor **138**. In the example of FIG. **34**, substrate **404** may be an insulating layer formed around sensor **138** with conductive bands that extend from an internal contact with contacts **1000** and **1002** to an external surface that forms contacts **410** and **412**. As shown in FIG. **34**, annular contacts **410** and **412** may be removable received by a press fit into conductive brackets **3102** and **3104** of a device **3100** (e.g., testing station **5002**, calibration station **5004**, and/or electronics unit **500**). Conductive brackets **3102** and **3104** may establish electrical communication between sensor **138** and device **3100** (e.g., testing station **5002**, calibration station **5004**, and/or electronics unit **500**).

[0275] FIG. **35**A shows an implementation of sensor carrier **402** in which a flexible circuit is wrapped over an end of sensor **138** such that a top portion **3200** and a bottom portion **3202** of the flexible substrate are formed on opposing sides of sensor **138**. As shown in FIG. **35**B, top portion **3200** and bottom portion **3202** may be wrapped over the ends of multiple sensors **138** such that a flex circuit strip **3404** forms a common sensor carrier for multiple sensors. Flex circuit strip **3204** may include pairs of internal contacts for coupling to contacts **1000** and **1002** of each sensor **138** and pairs of external contacts, each pair of external contacts coupled to a corresponding pair of internal contacts and forming contacts for coupling to testing station **5002** and/or calibration station **5004**. In this way, multiple sensors can be

transported and coupled to testing and calibration equipment as a group. Strip sensor carrier **3204** may include identifiers for each sensor **138** so that testing and/or calibration data for each sensor can be logged and stored. Individual pre-connected sensors may be formed by singulating strip sensor carrier **3204** into individual sensor carriers for each sensor that can be installed in an electronics unit, such as the wearable sensor units of FIGS. **13** and **14**. Strip **3204** may include singulation features **3220** (e.g., markings and/or scoring that facilitate singulation into individual pre-connected sensors.

[0276] Although FIGS. **35**A and **35**B show a flexible circuit strip that is wrapped around the ends of sensor **138**, this is merely illustrative. It should be appreciated that a flex strip carrier for more one or more sensors **138** may be attached to the sensor(s) in other ways. For example, the ends or other portions of sensors **138** may extend into a substrate of flexible circuit strip **3204** to couple to internal conductive contacts in the strip or the ends or other portions of sensors **138** may be attached to a surface of flexible circuit strip **3204** (e.g., using an anisotropic conductive film (ACF) or other conductive adhesive, a laser solder or other solder, a clip or other attachment mechanisms and/or datum features that position and align the sensor).

[0277] FIG. **36** shows an implementation of sensor carrier **302** in which a crimp connector **3301** extends through a portion of substrate **404**. As shown in FIG. **36**, crimp connector **3301** may have a base portion **3300** that extends from a first side of substrate **404** (e.g., to form one of contacts **410** and **412**). Crimp connector **3301** also includes arms **3302** extend from an opposing second side of substrate **404**. As shown in FIG. **37**, arms **3302** can be pressed together or crimped to mechanically secure and conductively couple to sensor **138**, thereby forming, for example, contact **406**. FIG. **38** shows a side view of the sensor carrier of FIGS. **36** and **37** and shows how two crimp connectors may be provided that extend through substrate **404** and form contacts **406** and **408** on a first side and contacts **410** and **412** on a second side. Although contacts **410** and **412** are formed on the second side of substrate **404** in FIG. **38**, it should be appreciated that contacts **410** and **412** can be formed on the first side, or on a sidewall or edge of substrate **404** (e.g., by including one or more bends or other conductive couplings within substrate **404**).

[0278] FIG. **39** shows an implementation of pre-connected sensor in which sensor carrier **402** includes a distally oriented channel **358** that directs sensor **138** distally such that sensor **138** includes a bend that is at least 45 degrees and/or less than 135 degrees. A channel cover **362** secures the glucose sensor **138** in the distally oriented channel **358**. In the example of FIG. **39**, one or more contacts (e.g. **408** and **406**) are implemented using conductive elastomeric members **1400**. In other embodiments contacts may be any suitable type (e.g. coil springs **306**, leaf spring **306***d*). Contacts (e.g. conductive elastomeric members **1400**) form a conductive coupling between sensor **138** and external equipment (e.g., testing station **5002**, calibration station **5004**, and/or on-skin sensor assembly **600**). Contacts may cooperate with underlying features on substrate **404** (e.g., protrusions **308**) and/or channel **322***d*, as shown, to form datum features that secure and align sensor **138** with respect to sensor carrier **402** (e.g., for manufacturing, calibration, testing, and/or in vivo operations). In some implementations, the sensor **138** maybe bent, glued, or bonded so as to be affixed within sensor carrier **402**.

[0279] FIG. **40** shows an implementation of sensor carrier **402** in which substrate **404** is a molded interconnect device. In the example of FIG. **40**, substrate **404** is formed from molded thermoplastic or thermoset (e.g., acrylonitrile butadiene styrene, a liquid crystal polymer, a polyimide/polyphthalamide plastic, or other thermoplastic or thermoset polymer materials) that includes conductive traces **3702**. Conductive traces **3702** may be formed on a surface of substrate **404** and/or may pass into and/or through portions of substrate **404** to form suitable connections. Conductive traces may be formed on the molded substrate using a variety of techniques (e.g. selective plating via laser etching, combining platable and non platable substrate polymers, or other suitable methods). In other embodiments, a conductive material (e.g. conductive polymer, metal stamping, plated polymer, metallic structure) may be overmolded with a non-conductive material.

[0280] To create suitable electrical connections as shown in FIG. **40**, conductive traces **3702** are electrically coupled between contacts (e.g. contact region **1000** and **1002** on sensor **138**) and external contacts (e.g. contacts **410** and **412**). Although contacts (e.g. **410** and **412**) are formed on the same surface of substrate **404** to which sensor **138** is attached in the example of FIG. **37**, this is merely illustrative. It should be appreciated that contacts (e.g. contacts **410** and **412**) may be formed on an opposing surface or on an edge or sidewall of substrate **404** and coupled to contacts (e.g. contacts **408** and **406**) by conductive materials (e.g. conductive layers, structures, adhesive, clips, solder, or interconnects) within or on substrate **404**. For example, contacts (e.g. contacts **410** and **412**) may form a designated area to interface electrical coupling on a different surface or region of substrate **404** on which sensor **138** is attached. The designated area may form a channel, groove, recess, slot, or similar alignment feature for orienting the sensor.

[0281] Molded thermoplastic substrate **404** may be an injection-molded substrate having features that facilitate various aspects of testing, calibration, and wearable device installation for sensor **138**. For example, molded thermoplastic substrate **404** may include datum features or other locating features or positioning features such as a recess **3700** having a shape that is complementary to the shape of the proximal end of sensor **138**. For example, recess **3700** may include three or more stepped regions that correspond to the steps between the different layers of the coaxial analyte sensor such as shown in FIG. **3**D. In other configurations, molded thermoplastic substrate **404** may include a flat-walled recess as in the example of FIG. **18**, a wall that forms a corner as in the example of FIG. **19**, or a rounded recess as in the example of FIG. **20**. In yet other configurations, molded thermoplastic substrate **404** may include raised features or protrusions on the surface that position and align sensor **138**. For example, a raised channel having a shape corresponding to the shape of sensor **138** may be provided on the surface of molded thermoplastic substrate **404**. As another example one more posts may extend from the surface of molded thermoplastic substrate **404**. For example, one or more lines of protrusions can be formed on the surface of molded thermoplastic substrate **404** against which and/or between which sensor **138** can be positioned and aligned. In this way, various configurations can be

provided for a molded thermoplastic substrate **404** including datum features that orient sensor **138** in a preferred direction at a preferred position.

[0282] Molded thermoplastic substrate **404** may also include other shaped features such as finger holds 3720 on opposing sides the substrate that facilitate grasping, holding, and transporting of sensor **138**. Molded thermoplastic substrate **404** may also include other shaped features such as anchoring features corresponding to the shape of connectors for manufacturing equipment **5091**, testing equipment **5004**, and calibration equipment **5004** such as grasping connector features **5093/5095** of manufacturing equipment **5091** and/or recess connectors **5006** and **5014** of testing equipment **5002** and calibration equipment **5004**. Anchoring features formed on molded thermoplastic substrate **404** and/or by molded thermoplastic substrate **404** itself may include one or more protrusions such as posts, snap-fit features, arms such as arms **202** (see, e.g., FIGS. **11-14**), recesses, notches, hooks, and/or tapered portions similar to the tapered portions shown in FIG. **28** (as examples). In some examples, a portion of molded thermoplastic substrate **404** or the entire molded thermoplastic substrate **404** may have a shape that corresponds to the shape of a mounting receptacle on or within one or more of manufacturing equipment **5091**, testing equipment **5002**, calibration equipment **5004**, carriers, and/or a wearable device.

[0283] Although substrate **404** is shown in FIG. **40** as being substantially rectilinear, a molded thermoplastic substrate **404** can be provided with features **3720** and/or an overall shape such as a handle shape for inserting, pulling, or otherwise manipulating sensor **138** during manufacturing and assembly operations. For example, molded thermoplastic substrate **404** may include a main portion configured to mechanically and electrically interface with manufacturing equipment **5091**, testing equipment **5002**, calibration equipment **5004**, and/or a wearable device, and a gripping portion that extends from the main portion. The gripping portion may extend from the manufacturing equipment **5091**, testing equipment **5002**, or calibration equipment **5004** during manufacturing operations to facilitate removal of sensor carrier **402** and sensor **138** from the equipment after or between the manufacturing operations. The gripping portion may be integrally formed with the main portion or may be a separate component that extends from the surface of, or from within, molded thermoplastic substrate **404**. The gripping component may be a post, a stock, a shaft, or an arched handle shaped for gripping by a gripping tool or by hand (e.g., by a technician).

[0284] As shown in FIG. **40**, sensor **138** may be placed in recess **3700** and secured to substrate **404** using adhesive **3704** (e.g., a conductive adhesive as described herein). Adhesive **3704** may be applied to couple contact **1000** of sensor **138** to a first conductive trace **3702** on substrate **404** to form contact **408** between sensor **138** and sensor carrier **402**. Adhesive **3704** may be also applied to couple contact **1002** of sensor **138** to a second conductive trace **3702** on substrate **404** to form contact **406** between sensor **138** and sensor carrier **402**. In this way, molded thermoplastic substrate **404** can provide a handle and/or a strain relief member for moving and/or otherwise handling sensor **138**.

[0285] FIG. **41** shows a top view of sensor carrier **402** of FIG. **40**. As shown in FIGS. **40** and **41**, the first conductive trace **3702** may extend from a contact portion with contact **1000** within recess **3700** to form one or more exposed portions on the surface of substrate **404** that form external contact **412** for coupling to testing station **5002**, calibration station **5004**, and/or electronics unit **500**. The second conductive trace **3702** may extend from a contact portion with contact **1002** within recess **3700** to form one or more exposed portions on the surface of substrate **404** that form external contact **410** for coupling to testing station **5002**, calibration station **5004**, and/or electronics unit **500**.

[0286] FIG. **42** shows a specific implementation of sensor carrier **402** as illustrated in FIGS. **40** and **41**. In this implementation of sensor carrier **402**, sensor **138** is attached to substrate **404** with a conductive coupler **3900**, such as, for example, clips, conductive adhesive, conductive polymer, metallic foil, conductive foam, conductive fabric, wire wrapping, wire threading or via any suitable methods. As shown in FIG. **43**, a substrate **4000** may have an elongated dimension along which parallel conductive strips **4001** and **4002** are formed. Multiple sensor **138** may be attached to substrate **4000** and extend beyond an edge of the substrate in a direction perpendicular to the elongated dimension of the substrate. Singulation features such as scoring **4020** may be provided that facilitate singulation of substrate **4000** into individual sensor carrier substrates **404** for each sensor and/or that electrically isolate portions of conductive strips **4001** and **4002** for each sensor. Each sensor may be attached to substrate **4000** using, for example clips **3900** or any other methods including, via the use of conductive adhesive, conductive polymer, metallic foil, conductive foam, conductive fabric, wire wrapping, wire threading or any other suitable methods. An identifier **450** for each sensor may be provided on a corresponding portion of substrate **4000**.

[0287] Sensors **138** may each have a pair of sensor electrical contacts (e.g., contacts **1000** and **1002**) coupled to a corresponding pair of electrical contacts formed from strips **4001** and **4002** on the substrate. Openings in substrate **4000** and/or vias that extend through substrate **4000** may provide exposed portions of strips **4001** and **4002** that form a plurality of pairs of electrical contacts for coupling each sensor **138** to testing station **5002**, calibration station **5004**, and/or electronics unit **500** (e.g., an electronics unit of a wearable device). Each of the plurality of pairs of electrical contacts is coupled to an associated pair of portions of strips **4001** and **4002** via the substrate.

[0288] FIGS. **44-46** show various contact configurations on sensor carriers that can be singulated from a sensor carrier strip of the type shown in FIG. **43**. In the example of FIG. **44**, a z-shaped contact configuration on substrate **4000** has been singulated to form a pre-connected sensor on a smaller portion of the substrate, referred to as substrate **404**. In this instance, the z-shaped contact configuration may allow for greater distance between connectors (e.g., larger pitch connection) on testing, manufacturing, or calibration equipment, though a z-shaped substrate is not necessary to generate the greater distance and other substrate shapes can be used. In the example of FIG. **45**, a square portion of substrate **4000** has been singulated to form a pre-connected sensor on the substrate **404**. In the example of FIG. **46** a square portion of substrate **4000** has been singulated to form a pre-connected sensor and an opening **4300** (e.g., an air gap) is provided in the singulated substrate **404** to improve electrical isolation between singulated contact strip portions **4001** and **4002**.

[0289] As shown in FIG. **47**A, in some implementations, an elongate substrate **4000** that forms a sensor carrier for

multiple sensor **138** can be provided with a feed-guide strip **4402** that runs along an elongated edge of the elongate substrate. Feed-guide strip **4402** may include locating features **4404** that can be accessed and manipulated to move and register a strip of pre-connected sensors through one or more manufacturing stations.

[0290] In the implementation of FIG. **47**A, sensors **138** can be attached to substrate **4000** in bulk and singulated on substrate **404** after manufacturing or testing operations. As shown in FIG. **47**B, a strip of pre-connected sensors as shown in FIG. **47**A can be provided on a reel **4410** for bulk storage and/or transportation and optionally automatically pulled from the reel using feed-guide strip **4402** to be moved through one or more testing stations and/or one or more calibration stations. FIG. **48** shows a pre-connected sensor having a sensor carrier that has been singulated from substrate **4000** and separated from a singulated portion **4402** of feed-guide strip **4402**. Alternatively, feed-guide strip **4402** can be separated as a strip prior to singulation of individual pre-connected sensors. In other embodiments, the feed guide is integrated into the final product configuration and not removed from the sensor carrier during or after singulation.

[0291] FIG. **49** shows an implementation of sensor carrier **402** in which a plurality of sets of contacts **406** and **408** are formed from receptacles **4600** having a slot for receiving a corresponding plurality of sensors **138**. In some implementations, the receptacles **4600** may be an elongated member comprising a resilient or flexible material. The receptacles **4600** may have slots that optionally pierce through an insulation layer or deform a portion of the outer layer so as to make contact with the sensors **138**.

[0292] FIG. **50** shows an implementation of a sensor carrier for multiple sensors **138** having recesses **4700** that form datum features to hold each sensor in an accurate alignment and position. Complementary magnetic features may be provided on sensor **138** and substrate **404** to hold each sensor in an accurate alignment and position and thereby facilitate accurate sensor processing.

[0293] FIG. **51**A shows an implementation of an elongate substrate **4800** formed using printed circuit board technology from either a rigid, flexible, or a combination rigid/flexible substrate, from which multiple sensor carriers **402** can be singulated. Flexible portion of the substrate may be manufactured from a material such as polyimide, PEEK, polyester or any suitable type. Rigid portion of the substrate may be manufactured from a material such as FR4, FR5, FR6, insulated metal substrate (IMS), PTFE, or any suitable type. As shown in FIG. **51**A, each sensor carrier may include a sensor connection portion **4804** and an interface or processing portion **4802**. In some implementations, each sensor carrier may include a sensor connection portion **4804** that extends from a rigid or flexible portion and an interface or processing portion **4802** that extends from a rigid or flexible portion. In these implementations, one or more contacts, such as contacts **406** and **408** can be formed on the sensor connection portion **4804** of each sensor carrier **402**. Sensor connection portions **4804** of substrate **4800** may contain anchoring or datum features of sensor carriers **402**.

[0294] FIG. **51**B shows another implementation of an elongate substrate **4800** as shown in FIG. **51**A with an optional electrical connection interface **4850** for connecting to a work station, such as a testing station, a calibration station, an assembly station, a coating station, or other manufacturing stations. The optional electrical connection interface **4850** may be coupled to one or more sensor carriers **402** through electrical traces configured on one or more layers of the circuit board. As shown in FIG. **51**B, a plurality of sensor carriers **402** are assembled in a panel, and each of the sensor carrier **402** may include a sensor connection portion **4804** that extends from a flexible or rigid portion and an interface or processing portion **4802** that extends from a flexible or rigid portion. In these implementations, one or more contacts, such as contacts **406** and **408** can be formed on the sensor connection portion **4804** of each sensor carrier **402**. Sensor connection portions **4804** of substrate **4800** may contain anchoring or datum features of sensor carriers **402**. In some implementations, the elongate substrate **4800** shown in FIG. **51**B may be configured to allow the sensor **138** to extend beyond the edge of the substrate. This may be accomplished by removing a portion of the elongated substrate **4860** for further processing. In some embodiments a perforation (e.g. V-score, mouse bites, or other suitable type) is included in elongated substrate **4800** for enabling the removal of the bottom portion of the panel **4860** for dipping or calibration. In this implementation, the elongated substrate **4800** can be configured for dipping or calibration, as described in FIG. **52**B.

[0295] Now referring to FIG. **52**A, an implementation of a sensor carrier **402** is shown with one or more sensor contacts (e.g. contacts **406** and **408**) on sensor connection portion **4804** and one or more one or more interface contacts (e.g. contacts **410** and **412**) on an interface or processing portion **4802**. One or more interface contacts (e.g., **410** and **412**) may be formed on sensor carrier **402** for coupling to testing station **5002**, calibration station **5004**, and/or electronics unit **500**. In this configuration, testing and/or calibration operations can be performed by coupling portion **4802** to the testing and/or calibration equipment.

[0296] FIG. **52**B shows an example panel implementation of a plurality of sensor carriers **402** with electrical connection interface **4850** for interfacing with electronics of a work station, such as a testing station, a calibration station, an assembly station, a coating station, or other manufacturing stations. The illustration of FIG. **52**B shows the elongate substrate **4800** of FIG. **48**B after the bottom panel portion **4860** has been removed (from the illustration of FIG. **51**B) and with sensor **138** attached via one or more sensor contacts (e.g. contacts **406** and **408**). In some implementations, the sensors can be permanently connected (e.g. conductive adhesive, conductive polymer, conductive ink, solder, welding, brazing, or other suitable methods) to the sensor carriers **402** and both components can be calibrated together or separately. In other implementations, the sensors can be releasably attached (e.g. via clips, metallic foil, conductive foam, conductive fabric, wire wrapping, wire threading or any other suitable methods).

[0297] Following testing and/or calibration operations, flexible portion **4802** may be folded around, folded over, wrapped around, wrapped over, or manipulated to envelope portion **4804** for installation into on-skin sensor assembly **600**. In the example of FIG. **53**A, portion **4802** may form a standalone processing circuit for sensor **138** (e.g., an implementation of sensor electronics **112**. In other implementations, portion **4802** may be coupled directly to signal processing circuit for assembly **600**, to a system in package (SIP) implementation of the sensor electronics or a main printed circuit board for the sensor electronics. In the example of FIG. **53**B, the flexible portion **4804** is folded to

envelope portion **4802** for installation into on-skin sensor assembly **600** so as to have sensor **138** positionally secured to extend (e.g. through opening **4808**) for insertion for in vivo operations.

[0298] FIG. **54** shows an implementation in which sensor carrier **402** is manufactured using printed circuit board technology as a daughter board for a main printed circuit board **5100** for the sensor electronics. As shown in FIG. **54**, one or more contacts such as contacts **5104** (e.g., solder contacts) may be formed between sensor carrier **402** and main PCB **5100** to form sensor electronics unit for sensor **138** in on-skin sensor assembly **600**. Conductive traces **5102** may couple contacts **5104** to sensor **138** via a conductive attachment mechanism **5103** (e.g., solder, conductive adhesive, a conductive tape, or other conductive attachment as discussed herein).

[0299] FIG. **55** shows an implementation of sensor carrier **402** in which a pinch clip **5200** is provided to close the arms **5204** of a crimp connector **5202** to secure sensor **138** to substrate **404**. Connector **5204** may be formed form a conductive material that forms one of contacts **410** and **412**. As shown in FIG. **55**, pinch clip **5200** includes clasping arms **5208** with ramped surfaces that push the arms outward as pinch clip **5200** is move toward substrate **404** in direction **5206** and snap back to secure pinch clip **5200** to substrate **404**. In other implementations, pinch clip **5200** may be provided without clasping arms **5208** so that pinch clip **5200** is removable after arms **5204** are pinched closed so that pinch clip **5200** does not form a part of the sensor carrier. As shown in FIG. **55**, one or more electrode breakouts **5220** may be provided to form, for example, one or more of contacts **410** and **412** on substrate **404**. Although breakout **5220** is formed on a surface of substrate **404** that is opposed to the surface to which sensor **138** is attached in the example of FIG. **55**, this is merely illustrative. It should be appreciated that breakouts for contacts such as contacts **410** and **412** may be formed on the opposing surface, on the same surface as sensor **138**, or on an edge or sidewall of substrate **404** and coupled to contacts **408** and **406** by conductive vias or other conductive layers, structures, or interconnects within or on substrate **404**. In some implementations, a pinch clip **5200** may be used to apply bias force against sensor **138** in combination with crimp connector **5202** or directly against substrate without crimp connector **5202**. Pinch clip **5202** may apply force radially, axially, or in a suitable direction to provide a biasing force on sensor **138** and conductive pathway.

[0300] FIG. **56** shows an implementation of sensor carrier **402** in which contacts **406** and **408** are formed from foldable conductive clips **5300**. Sensor **138** may be inserted through openings **5302** in each clip **5300** and mechanically secured to substrate **404** and conductively coupled to clips **5300** by a folding a portion **5304** of each of clips **5300** over onto sensor **138**.

[0301] Portions **5304** of clips **5300** may also form contacts **410** and **412** for coupling to external equipment such as a manufacturing station (e.g., a testing station, a calibration station, an assembly station, a coating station, or other manufacturing stations). However, this is merely illustrative. In other implementations, one or more electrode breakouts that are conductively coupled to clips **5300** may be provided to form, for example, one or more of contacts **410** and **412** on substrate **404**. Such breakouts may be formed on a surface of substrate **404** that is opposed to the surface to which sensor **138** is attached, on the same surface as sensor **138**, or on an edge or sidewall of substrate **404** and coupled to clips **5300** by conductive vias or other conductive layers, structures, or interconnects within or on substrate **404**.

[0302] Clips **5300** also form datum features for positioning and aligning sensor **138** relative to substrate **404**. Substrate **404** may be sized and shaped (or may include structural features) that form anchoring features for substrate **404** relative to manufacturing stations and/or a housing of a wearable device. In this way, sensor carrier **402** may be used to easily position and align sensor **138** for both manufacturing and assembly operations (e.g., using the datum features to align the sensor relative to substrate **404** and the anchoring features to align the substrate relative to the manufacturing or wearable equipment).

[0303] The conductive components of the sensor carrier **402** in the various embodiments described herein are electrically isolated from each other and the environment when installed in on-skin sensor assembly **600**. For example, contacts **406**, **408**, **410**, and **412** may be electrically isolated from each other and the environment, using a non-conductive adhesive such as a one or two-part epoxy, using a polyurethane, using a low pressure overmolding such as a moldable polyamide or a moldable polyolefin, using an injection overmolded thermoplastic or thermoset, using a non-elastomer such as welded clamshell plastic, adhesively bonded clamshell, single or 2-sided cavity potted with sealant, e.g., epoxy, urethane, silicone, etc., or using a factory pre-compressed elastomer such as a constrained two-part cavity that holds an elastomer in a compressed state. The two-part cavity may hold the elastomer in the compressed state by a snap fit, a bonding such as an ultrasonic weld, a laser weld, a solvent bond, or a heat stake, or a mechanical fastener such as a screw, rivet, clip, or other fastener.

[0304] Illustrative operations that may be performed for manufacturing and using a pre-connected analyte sensor are shown in FIG. **57**.

[0305] At block **5400**, an analyte sensor such as analyte sensor **138** may be provided. As described herein the analyte sensor may have an elongated body (e.g., an elongated conductive body with an elongated conductive core), and a working electrode on the elongated body (e.g., at a distal end of the elongated body). The analyte sensor may also include one or more electrical contacts at a proximal end or elsewhere along the elongated body and coupled, respectively, to the working electrode and/or the reference electrode.

[0306] At block **5402**, a sensor carrier such as one of the implementations of sensor carrier **402** described herein may be attached, for example, to the proximal end of the elongated body. Attaching the sensor carrier includes coupling one or more contacts (e.g., on a substrate) of the sensor carrier to one or more corresponding electrical contacts on the elongated body.

[0307] At block **5403**, a work station such as a manufacturing station is provided. As described herein, a manufacturing station can be configured to perform one or more dip coating processes to form the membrane **108** described above on the working electrode.

[0308] At block **5404**, the analyte sensor may be coupled to at least one testing station (e.g., testing station **5002**) by coupling the sensor carrier to circuitry of the at least one test station. Coupling the sensor carrier to the circuitry of the at least one test station may include mechanically coupling one

or more anchoring features such as a substrate of the sensor carrier to a mating interface of the test station such that one or more external contacts on the substrate are coupled to one or more corresponding contacts at the test station. An identifier for the sensor on the sensor carrier may be read by the testing station. Test data obtained by the test station may be stored and/or transmitted, in association with the identifier, by the test station.

[0309] At block **5406**, the analyte sensor may be coupled to at least one calibration station (e.g., calibration station **5004**) by coupling the sensor carrier to circuitry of the at least one calibration station. Coupling the sensor carrier to the circuitry of the at least one calibration station may include mechanically coupling the one or more anchoring features such as the substrate of the sensor carrier to a mating interface of the calibration station such that one or more external contacts on the substrate is coupled to one or more corresponding contacts at the calibration station. An identifier for the sensor on the sensor carrier may be read by the calibration station. Calibration data obtained by the calibration station may be stored and/or transmitted, in association with the identifier, by the calibration station. Calibration data may be stored on the sensor carrier or transmitted for later use by an on-skin sensor assembly **600** during in vivo use of sensor **138**.

[0310] Sensor carrier **402** may be coupled to one or more additional manufacturing stations as desired. The additional manufacturing stations may include potentiostat measurement stations, sensor straightening stations, membrane dipping stations, curing stations, analyte sensitivity measurement stations, and/or inspection stations.

[0311] At block **5408**, the sensor carrier may be coupled to sensor electronics (e.g., sensor electronics **112** of electronics unit **500**) of a wearable device such as on-skin sensor assembly **600**. Coupling the sensor carrier to the sensor electronics may include coupling the one or more external contacts on the sensor carrier to corresponding contacts of the sensor electronics. In some embodiments, coupling the sensor carrier to the sensor electronics may include securing the sensor carrier between a base such as base **128** and electronics unit **500** as described herein. A reader in the on-skin sensor assembly **600** may obtain an identifier of the sensor from the sensor carrier. Calibration data for the sensor may be obtained based on the identifier.

[0312] At block **5410**, in vivo signals from the working electrode (e.g., and a reference electrode) may be obtained and processed with the sensor electronics. The in vivo signals from the working electrode (e.g., and a reference electrode) may be received by the sensor electronics from the sensor through the circuitry of the sensor carrier.

[0313] The methods disclosed herein comprise one or more steps or actions for achieving the described methods. The method steps and/or actions may be interchanged with one another without departing from the scope of the claims. In other words, unless a specific order of steps or actions is specified, the order and/or use of specific steps and/or actions may be modified without departing from the scope of the claims. For example, the operations described above in connection with blocks **5404** and **5406** may be reversed and/or may be performed in parallel.

[0314] In some scenarios, it may be desirable to couple sensor **138** to one or more contacts on a substrate in a preferred position and orientation. FIG. **58** shows an exemplary apparatus **5531** in which sensor **138** is oriented to substrate **5530** using an elastomeric tube. As shown in FIG. **58**, apparatus **5531** may include a substrate **5530** having one or more conductive contacts such as contacts **5532** and **5534** (e.g., exposed copper pads on a printed circuit substrate), and an elastomeric tube **5500**. Elastomeric tube **5500** may be formed from a non-conductive elastomer.

[0315] As shown, elastomeric tube **5500** may be formed with a "D", "O", oval, pyramidal, or hemispherical shaped cross-section having an elongated cutout **5503** in the bottom portion of the elastomeric tube **5500** within which sensor **138** is disposed. In this way, sidewalls of the elongated cutout of elastomeric tube **5500** can align sensor **138** relative to substrate **5530**.

[0316] Bottom portions **5502** on either side of cutout **5503** may be attached to substrate **5530**. The bottom portions **5502** may be attached to substrate using adhesive **5504** such as a pressure-sensitive adhesive. The elongated opening **5501** and cutout **5503** in the elastomeric tube **5500** provides sufficient space that, in order to assemble the apparatus, tube **5500** can be placed over sensor **138** while sensor **138** is in place on substrate **5530**.

[0317] FIG. **59** shows an exploded perspective view of the apparatus of FIG. **55** in which contacts **5532** and **5534** can be seen on substrate **5530**. Sensor **138** may be positioned over one or more contacts such as contacts **5532** and **5534**.

[0318] Sensor **138** may be loosely held within opening **5501** of tube **5500** during initial placement of the tube over the sensor, and then be fixed to the substrate **5530** by the tube when the tube is compressed (e.g., by an upper housing of a wearable device). In this way, sensor **138** may be communicatively coupled and mechanically fixed to a substrate without soldering or other bonding operations.

[0319] During manufacturing operations and/or during in-vivo use of sensor **138**, sensor **138** may be held in place on substrate **404** by external compression of tube **5500**. FIG. **60** shows an example in which sensor **138** is held in place by compression of tube **5500** by a housing structure. For example, housing **5700** (e.g., a housing of a wearable device or a lid or clip for a manufacturing station) may include a protruding member **5702** that, in an assembled configuration, compresses tube **5500** to secure sensor **138**.

[0320] As noted above in connection with, for example, FIGS. **35**B, **43**, **47**A, **47**B, **50**, and **51**, during manufacturing operations, multiple sensors **138** may be carried by a common sensor carrier. However, in some scenarios, a common carrier such as an intelligent carrier may be provided for manufacturing operations for multiple pre-connected sensors. FIG. **61** shows an example of a carrier for multiple pre-connected sensors. As shown in FIG. **58**, a carrier **5800** may include a housing **5802** with interfaces **5804** for multiple pre-connected sensors. Housing **5802** may be a substantially solid substrate or may be a housing that forms an interior cavity within which other components are mounted and/or connected.

[0321] Each interface **5804** may be configured to receive a sensor carrier **402** in any of the implementations described herein. For example, each interface **5804** may include one or more features that interface with one or more corresponding anchoring features of a sensor carrier as described herein in accordance with various implementations. Carrier **5800** may include circuitry **5806** (e.g., one or more processors and/or memory) configured to communicate with sensors **138** and/or external computing equipment. Circuitry **5806** may include communications circuitry such as one or more

antennas for transmitting and/or receiving data from external equipment. Housing **5802** may include one or more structures **5810** (e.g., clips, clasps, protrusions, recesses, notches, posts, or the like) for mechanically coupling carrier **5800** to manufacturing equipment. One or more conductive contacts **5808** may be provided on housing **5802** that communicatively couple manufacturing equipment to sensors **138** through the carrier.

[0322] As shown, each interface **5804** may be associated with a particular identification number (represented, as an example, in FIG. **58** as I_1, I_2 . . . I_{N-1}, and I_N). Circuitry **5806** may electronically identify sensors mounted in interfaces **5804** of carrier **5800** with the identification number associated with that interface. However, this is merely illustrative. In other implementations, sensors **138** may be uniquely identified by circuitry **5806** using a reader in each of interfaces **5804** that reads an identifier such as identifier **450** on the sensor carrier. Testing and/or calibration data may be gathered by processing circuitry **5806** and stored and/or transmitted along with an identifier for each sensor.

[0323] During manufacturing, one or more pre-connected sensors may be loaded carrier **5800**. Carrier **5800** may secure the pre-connected sensors therein and perform potentiostat measurements for each sensor (e.g., using circuitry **5806**). Sensors **138** may be secured to interfaces **5804** by individual mounting features or carrier **5800** may be provided with a locking mechanism such as a slidable bar **5812**. Slidable bar **5812** may be slidable (e.g., by a handle **5814**) between an open position as shown, in which sensor carriers can be inserted into and removed from interfaces **5804**, to a closed position in which bar **5812** blocks removal of the sensor carriers from the interfaces.

[0324] In some scenarios, an initial measurement test may be performed by carrier **5800** to test the potentiostat connection through the sensor interconnect electrodes and the sensor surfaces. Manufacturing operations that may be performed for sensors **138** coupled to carrier **5800** may include physical manipulation of the sensor such as straightening of the sensors. Carrier **5800** may facilitate more efficient manufacturing by allowing multiple sensors to be straightened in a single operation using automated straightening equipment.

[0325] Carrier **5800** may facilitate potentiostat and/or other measurements at various stages of manufacturing for sensors **138**. Potentiostat measurements may be performed before, during, and/or after straightening operations and information regarding sensor damage or any other mechanical stress that might be introduced by the straightening may be saved and/or transmitted along with associated sensor ID's.

[0326] Manufacturing operations that may be performed for sensors **138** coupled to carrier **5800** may also include a membrane process in which dipping operations are performed to form a membrane such as membrane **508** for each sensor. Straightened sensors **138** mounted in carrier **5800** may be concurrently dipped. Potentiostat measurements may be performed before, during, and/or after membrane operations and information associated with the electrochemistry of the sensors and dipping process may be gathered, processed, stored, and/or transmitted by carrier **5800**.

[0327] Manufacturing operations that may be performed for sensors **138** coupled to carrier **5800** may also include a curing process. Performing curing for groups of sensors **138** mounted in carrier **5800** may allow the curing process to take less space, which can reduce the footprint of the manufacturing area used by curing equipment. Potentiostat measurements may be performed before, during, and/or after curing operations and information associated with the electrochemistry of the sensors and curing process may be gathered, processed, stored, and/or transmitted by carrier **5800**.

[0328] Manufacturing operations that may be performed for sensors **138** coupled to carrier **5800** may also include calibration operations. Because carrier **5800** can perform connection testing early in the manufacturing process, improved analyte/electrochemical calibration can be performed by carrier **5800** itself and/or in cooperation with external manufacturing equipment. Calibration data may be gathered, processed, stored, and/or transmitted by carrier **5800**.

[0329] Gathering calibration and/or testing data with carrier **5800** can save time in connecting and disconnecting additional external equipment. Gathering calibration and/or testing data with carrier **5800**, particularly when data is gathered and stored automatically in connection with sensor ID's, can also reduce calibration/testing errors because the data is gathered by the same equipment throughout various processes.

[0330] Manufacturing operations that may be performed for sensors **138** coupled to carrier **5800** may also include analyte concentration measurements. For example, carrier **5800** may be moved by manufacturing equipment (e.g., a robotic arm) to expose the sensors **138** mounted in the carrier through various analyte baths (e.g., glucose baths). Carrier **5800** may gather electrical potential measurements during the various bath exposures. Information associated with the electrical potential measurements during the various bath exposures may be gathered, processed, stored, and/or transmitted by carrier **5800**.

[0331] Manufacturing operations that may be performed for sensors **138** coupled to carrier **5800** may also include analyte sensitivity measurements. Sensitivity measurements that may be performed by carrier **5800** may include baseline measurements that indicate the signal from each sensor without analyte exposure, slope measurements that indicate the signal change for a given amount of an analyte, and/or noise measurements. These sensitivity measurements may be stored, and/or transmitted by carrier **5800**.

[0332] Manufacturing operations that may be performed for sensors **138** coupled to carrier **5800** may also include visual inspection operations (e.g., by a technician). Providing a group of pre-connected sensors, mounted in carrier **5800**, that have already been through all of the testing/calibration/manufacturing operations described above may allow a more efficient and/or more automated visual inspection and rejection (e.g., because the exact physical location of each sensor within carrier **5800** is known). Sensors **138** that have exhibited unusual electrochemistry or mechanical stress during manufacturing operations can be flagged by carrier **5800** (e.g., using a display, a visual indicator, or transmission of flag information to an external device) for retesting or rejection.

[0333] The connections between the elements shown in some figures illustrate exemplary communication paths. Additional communication paths, either direct or via an intermediary, may be included to further facilitate the exchange of information between the elements. The communication paths may be bi-directional communication paths allowing the elements to exchange information.

[0334] Various operations of methods described above may be performed by any suitable means capable of performing the operations, such as various hardware and/or software component(s), circuits, and/or module(s). Generally, any operations illustrated in the figures may be performed by corresponding functional means capable of performing the operations.

[0335] The various illustrative logical blocks, modules and circuits described in connection with the present disclosure (such as the blocks of FIG. **2**) may be implemented or performed with a digital signal processor (DSP), an application specific integrated circuit (ASIC), a field programmable gate array signal (FPGA) or other programmable logic device (PLD), discrete gate or transistor logic, discrete hardware components or any combination thereof designed to perform the functions described herein. A processor may be a microprocessor, but in the alternative, the processor may be any commercially available processor, controller, microcontroller or state machine. A processor may also be implemented as a combination of computing devices, e.g., a combination of a DSP and a microprocessor, a plurality of microprocessors, one or more microprocessors in conjunction with a DSP core, or any other such configuration.

[0336] In one or more aspects, various functions described may be implemented in hardware, software, firmware, or any combination thereof. If implemented in software, the functions may be stored on or transmitted over as one or more instructions or code on a computer-readable medium. Computer-readable media includes both computer storage media and communication media including any medium that facilitates transfer of a computer program from one place to another. A storage media may be any available media that can be accessed by a computer. By way of example, and not limitation, such computer-readable media can comprise various types of RAM, ROM, CD-ROM or other optical disk storage, magnetic disk storage or other magnetic storage devices, or any other medium that can be used to carry or store desired program code in the form of instructions or data structures and that can be accessed by a computer. Also, any connection is properly termed a computer-readable medium. For example, if the software is transmitted from a website, server, or other remote source using a coaxial cable, fiber optic cable, twisted pair, digital subscriber line (DSL), or wireless technologies such as infrared, radio, and microwave, then the coaxial cable, fiber optic cable, twisted pair, DSL, or wireless technologies such as infrared, radio, WiFi, Bluetooth®, RFID, NFC, and microwave are included in the definition of medium. Disk and disc, as used herein, includes compact disc (CD), laser disc, optical disc, digital versatile disc (DVD), floppy disk and Blu-ray® disc where disks usually reproduce data magnetically, while discs reproduce data optically with lasers. Thus, in some aspects a computer readable medium may comprise non-transitory computer readable medium (e.g., tangible media). In addition, in some aspects a computer readable medium may comprise transitory computer readable medium (e.g., a signal). Combinations of the above should also be included within the scope of computer-readable media.

[0337] Certain aspects may comprise a computer program product for performing the operations presented herein. For example, such a computer program product may comprise a computer readable medium having instructions stored (and/or encoded) thereon, the instructions being executable by one or more processors to perform the operations described herein. For certain aspects, the computer program product may include packaging material.

[0338] Software or instructions may also be transmitted over a transmission medium. For example, if the software is transmitted from a website, server, or other remote source using a coaxial cable, fiber optic cable, twisted pair, digital subscriber line (DSL), or wireless technologies such as infrared, radio, and microwave, then the coaxial cable, fiber optic cable, twisted pair, DSL, or wireless technologies such as infrared, radio, and microwave are included in the definition of transmission medium.

[0339] Further, it should be appreciated that modules and/or other appropriate means for performing the methods and techniques described herein can be downloaded and/or otherwise obtained by a user terminal and/or base station as applicable. For example, such a device can be coupled to a server to facilitate the transfer of means for performing the methods described herein. Alternatively, various methods described herein can be provided via storage means (e.g., RAM, ROM, a physical storage medium such as a compact disc (CD) or floppy disk, etc.), such that a user terminal and/or base station can obtain the various methods upon coupling or providing the storage means to the device. Moreover, any other suitable technique for providing the methods and techniques described herein to a device can be utilized.

[0340] It is to be understood that the claims are not limited to the precise configuration and components illustrated above. Various modifications, changes and variations may be made in the arrangement, operation and details of the methods and apparatus described above without departing from the scope of the claims.

[0341] Unless otherwise defined, all terms (including technical and scientific terms) are to be given their ordinary and customary meaning to a person of ordinary skill in the art, and are not to be limited to a special or customized meaning unless expressly so defined herein. It should be noted that the use of particular terminology when describing certain features or aspects of the disclosure should not be taken to imply that the terminology is being re-defined herein to be restricted to include any specific characteristics of the features or aspects of the disclosure with which that terminology is associated. Terms and phrases used in this application, and variations thereof, especially in the appended claims, unless otherwise expressly stated, should be construed as open ended as opposed to limiting. As examples of the foregoing, the term 'including' should be read to mean 'including, without limitation,' 'including but not limited to,' or the like; the term 'comprising' as used herein is synonymous with 'including,' 'containing,' or 'characterized by,' and is inclusive or open-ended and does not exclude additional, unrecited elements or method steps; the term 'having' should be interpreted as 'having at least;' the term 'includes' should be interpreted as 'includes but is not limited to;' the term 'example' is used to provide exemplary instances of the item in discussion, not an exhaustive or limiting list thereof; adjectives such as 'known', 'normal', 'standard', and terms of similar meaning should not be construed as limiting the item described to a given time period or to an item available as of a given time, but instead should be read to encompass known, normal, or standard technologies that may be available or known now or at any time in the future; and use of terms like 'preferably,' 'preferred', 'desired,' or 'desirable,' and words of similar

meaning should not be understood as implying that certain features are critical, essential, or even important to the structure or function of the invention, but instead as merely intended to highlight alternative or additional features that may or may not be utilized in a particular embodiment of the invention. Likewise, a group of items linked with the conjunction 'and' should not be read as requiring that each and every one of those items be present in the grouping, but rather should be read as 'and/or' unless expressly stated otherwise. Similarly, a group of items linked with the conjunction 'or' should not be read as requiring mutual exclusivity among that group, but rather should be read as 'and/or' unless expressly stated otherwise.

[0342] Where a range of values is provided, it is understood that the upper and lower limit and each intervening value between the upper and lower limit of the range is encompassed within the embodiments.

[0343] With respect to the use of substantially any plural and/or singular terms herein, those having skill in the art can translate from the plural to the singular and/or from the singular to the plural as is appropriate to the context and/or application. The various singular/plural permutations may be expressly set forth herein for sake of clarity. The indefinite article "a" or "an" does not exclude a plurality. A single processor or other unit may fulfill the functions of several items recited in the claims. The mere fact that certain measures are recited in mutually different dependent claims does not indicate that a combination of these measures cannot be used to advantage. Any reference signs in the claims should not be construed as limiting the scope.

[0344] It will be further understood by those within the art that if a specific number of an introduced claim recitation is intended, such an intent will be explicitly recited in the claim, and in the absence of such recitation no such intent is present. For example, as an aid to understanding, the following appended claims may contain usage of the introductory phrases "at least one" and "one or more" to introduce claim recitations. However, the use of such phrases should not be construed to imply that the introduction of a claim recitation by the indefinite articles "a" or "an" limits any particular claim containing such introduced claim recitation to embodiments containing only one such recitation, even when the same claim includes the introductory phrases "one or more" or "at least one" and indefinite articles such as "a" or "an" (e.g., "a" and/or "an" should typically be interpreted to mean "at least one" or "one or more"); the same holds true for the use of definite articles used to introduce claim recitations. In addition, even if a specific number of an introduced claim recitation is explicitly recited, those skilled in the art will recognize that such recitation should typically be interpreted to mean at least the recited number (e.g., the bare recitation of "two recitations," without other modifiers, typically means at least two recitations, or two or more recitations). Furthermore, in those instances where a convention analogous to "at least one of A, B, and C, etc." is used, in general such a construction is intended in the sense one having skill in the art would understand the convention, e.g., as including any combination of the listed items, including single members (e.g., "a system having at least one of A, B, and C" would include but not be limited to systems that have A alone, B alone, C alone, A and B together, A and C together, B and C together, and/or A, B, and C together, etc.). In those instances where a convention analogous to "at least one of A, B, or C, etc." is used, in general such a construction is intended in the sense one having skill in the art would understand the convention (e.g., "a system having at least one of A, B, or C" would include but not be limited to systems that have A alone, B alone, C alone, A and B together, A and C together, B and C together, and/or A, B, and C together, etc.). It will be further understood by those within the art that virtually any disjunctive word and/or phrase presenting two or more alternative terms, whether in the description, claims, or drawings, should be understood to contemplate the possibilities of including one of the terms, either of the terms, or both terms. For example, the phrase "A or B" will be understood to include the possibilities of "A" or "B" or "A and B."

[0345] All numbers expressing quantities of ingredients, reaction conditions, and so forth used in the specification are to be understood as being modified in all instances by the term 'about.' Accordingly, unless indicated to the contrary, the numerical parameters set forth herein are approximations that may vary depending upon the desired properties sought to be obtained. At the very least, and not as an attempt to limit the application of the doctrine of equivalents to the scope of any claims in any application claiming priority to the present application, each numerical parameter should be construed in light of the number of significant digits and ordinary rounding approaches.

[0346] All references cited herein are incorporated herein by reference in their entirety. To the extent publications and patents or patent applications incorporated by reference contradict the disclosure contained in the specification, the specification is intended to supersede and/or take precedence over any such contradictory material.

[0347] Headings are included herein for reference and to aid in locating various sections. These headings are not intended to limit the scope of the concepts described with respect thereto. Such concepts may have applicability throughout the entire specification.

[0348] Furthermore, although the foregoing has been described in some detail by way of illustrations and examples for purposes of clarity and understanding, it is apparent to those skilled in the art that certain changes and modifications may be practiced. Therefore, the description and examples should not be construed as limiting the scope of the invention to the specific embodiments and examples described herein, but rather to also cover all modification and alternatives coming with the true scope and spirit of the invention.

[0349] Various system and methods described may be fully implemented and/or controlled in any number of computing devices. Typically, instructions are laid out on computer readable media, generally non-transitory, and these instructions are sufficient to allow a processor in the computing device to implement the method of the invention. The computer readable medium may be a hard drive or solid state storage having instructions that, when run, are loaded into random access memory. Inputs to the application, e.g., from the plurality of users or from any one user, may be by any number of appropriate computer input devices. For example, users may employ a keyboard, mouse, touchscreen, joystick, trackpad, other pointing device, or any other such computer input device to input data relevant to the calculations. Data may also be input by way of an inserted memory chip, hard drive, flash drives, flash memory, optical media, magnetic media, or any other type of file-storing medium. The outputs may be delivered to a

user by way of a video graphics card or integrated graphics chipset coupled to a display that maybe seen by a user. Alternatively, a printer may be employed to output hard copies of the results. Given this teaching, any number of other tangible outputs will also be understood to be contemplated by the invention. For example, outputs may be stored on a memory chip, hard drive, flash drives, flash memory, optical media, magnetic media, or any other type of output. It should also be noted that the invention may be implemented on any number of different types of computing devices, e.g., personal computers, laptop computers, notebook computers, net book computers, handheld computers, personal digital assistants, mobile phones, smart phones, tablet computers, and also on devices specifically designed for these purpose. In one implementation, a user of a smart phone or wi-fi-connected device downloads a copy of the application to their device from a server using a wireless Internet connection. An appropriate authentication procedure and secure transaction process may provide for payment to be made to the seller. The application may download over the mobile connection, or over the WiFi or other wireless network connection. The application may then be run by the user. Such a networked system may provide a suitable computing environment for an implementation in which a plurality of users provide separate inputs to the system and method. In the below system where factory calibration schemes are contemplated, the plural inputs may allow plural users to input relevant data at the same time.

What is claimed is:

1. An array of pre-connected analyte sensors, the array comprising:

a substrate;

a first plurality of electrical contacts disposed on the substrate;

a second plurality of electrical contacts disposed on the substrate; and

a plurality of analyte sensors disposed on the substrate, each of the plurality of analyte sensors comprising

a first sensor electrical contact coupled to a corresponding one of the first plurality of electrical contacts on the substrate, and

a second sensor electrical contact coupled to a corresponding one of the second plurality of electrical contacts on the substrate.

2. The array of claim **1**, wherein the first plurality of electrical contacts are aligned along the substrate.

3. The array of claim **2**, wherein the first plurality of electrical contacts are formed from an exposed contact surface.

4. The array of claim **1**, wherein the second plurality of electrical contacts are aligned along the substrate.

5. The array of claim **4**, wherein the second plurality of electrical contacts are formed from an exposed contact surface.

6. The array of claim **1**, wherein the first and second plurality of electrical contacts are configured to connect with a separate device.

7. The array of claim **6**, wherein the separate device is a component of a manufacturing station.

8. The array of claim **1**, wherein the substrate comprises at least one singulation feature configured to facilitate singulation of the substrate into a plurality of sensor carriers, wherein each of the plurality of sensor carriers is attached to an individual one of the analyte sensors.

9. The array of claim **1**, further comprising a plurality of identifiers disposed on the substrate.

10. The array of claim **1**, wherein the substrate comprises an elongated dimension, wherein the plurality of analyte sensors extend beyond an edge of the substrate in a direction orthogonal to the elongated dimension.

11. The array of claim **10**, further comprising a feed-guide strip that runs along an opposing edge of the substrate in the elongated dimension.

12. The array of claim **1**, wherein the substrate comprises a flexible substrate configured to be rolled onto a reel.

13. The array of claim **11**, wherein the feed-guide strip is removable from the substrate.

14. The array of claim **1**, wherein the substrate comprises a molded thermoplastic having a plurality of datum features that control a position and orientation of the plurality of analyte sensors, and wherein the first plurality of electrical contacts and the second plurality of electrical contacts each comprise embedded conductive traces in the molded thermoplastic.

15. The array of claim **1**, further comprising a first datum structure coupled to the array, the first datum structure configured to position at least one analyte sensor.

16. The array of claim **15**, wherein the first datum structure includes at least one singulation feature configured to facilitate singulation of the first datum structure into a plurality of second datum structures, wherein each of the plurality of second datum structures is coupled to a corresponding one of a plurality of sensor carriers formed by the substrate.

17. The array of claim **1**, wherein the substrate includes processing circuitry configured to perform at least potentiostat measurements for the plurality of analyte sensors.

18. The array of claim **17**, further comprising communications circuitry operable by the processing circuitry to send and receive data associated with each of the analyte sensors together with an identifier for that analyte sensor.

19. The array of claim **1**, wherein the array comprises one or more strips.

* * * * *