July 17, 1923.

1,462,340

H. J. H. HUBER

ELECTRIC SWITCH

Filed Sept. 19, 1918

3 Sheets-Sheet 1

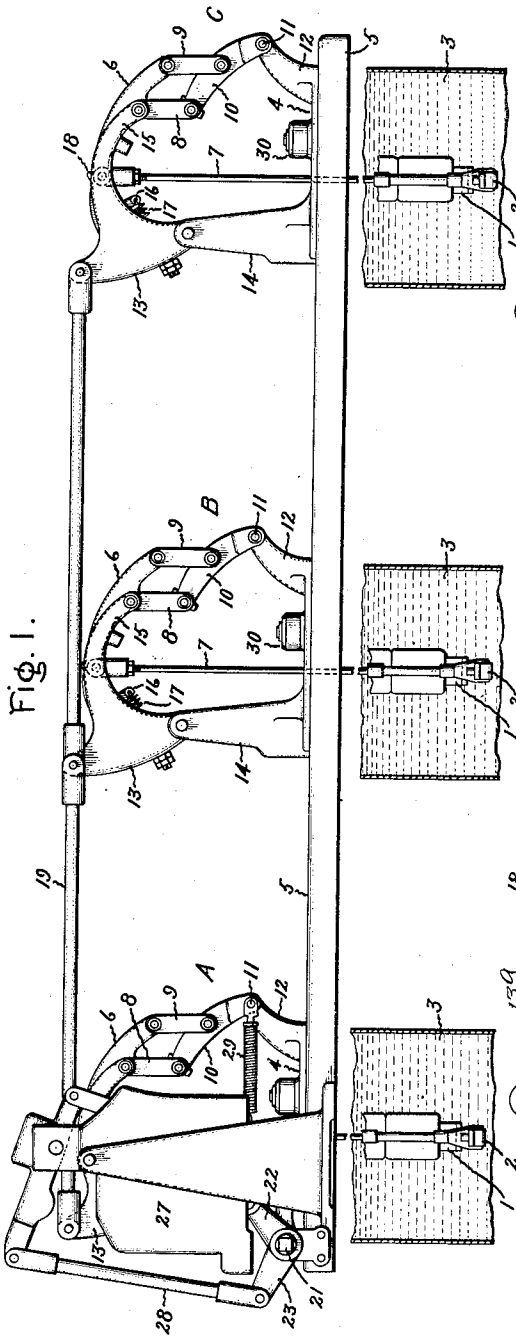

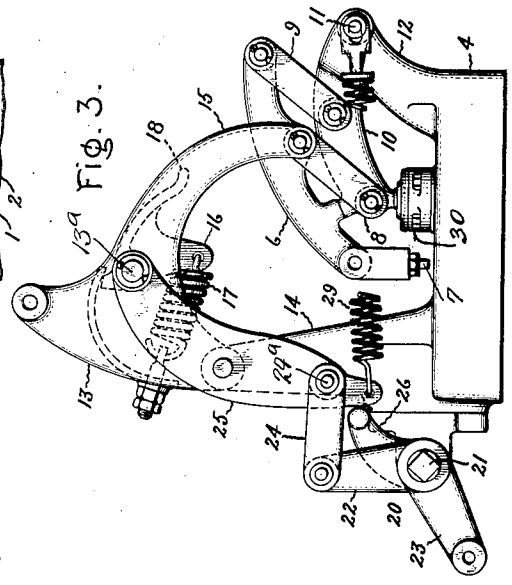

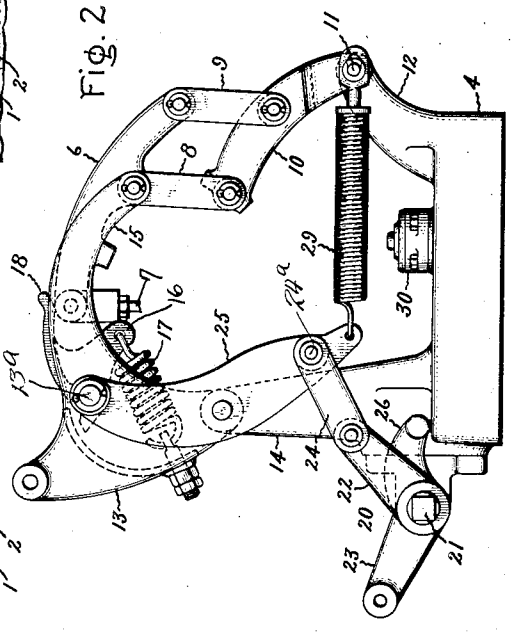

Inventor:
Herman J. H. Huber,
by Albert G. Davis
His Attorney.

July 17, 1923. 1,462,340

H. J. H. HUBER

ELECTRIC SWITCH

Filed Sept. 19, 1918 3 Sheets-Sheet 2

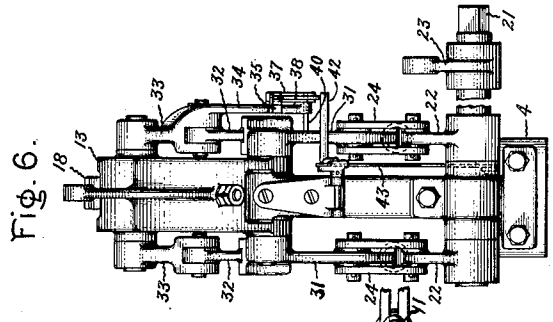

Fig. 6.

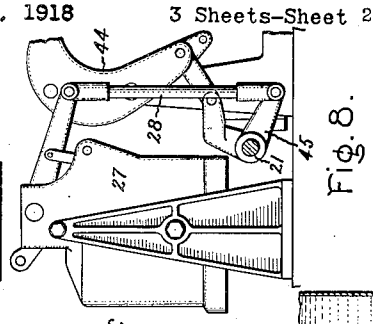

Fig. 8.

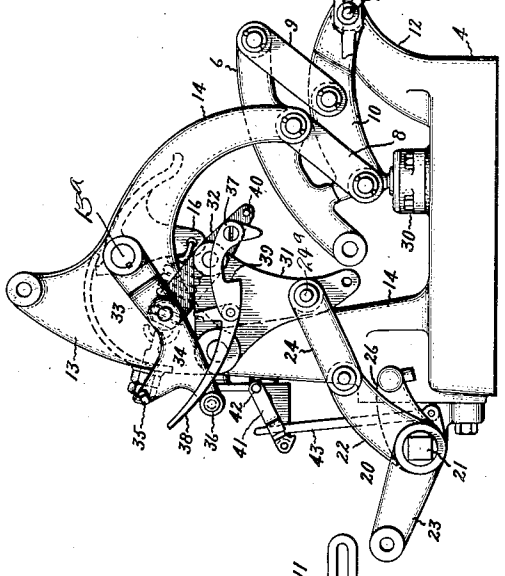

Fig. 5.

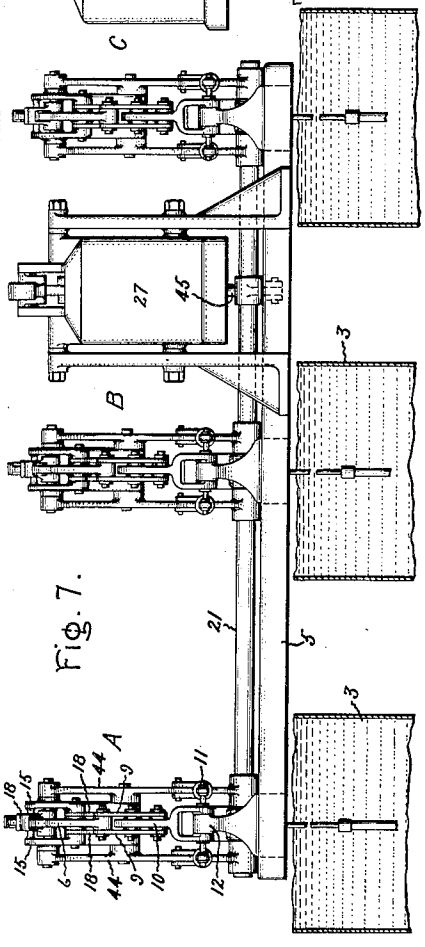

Fig. 7.

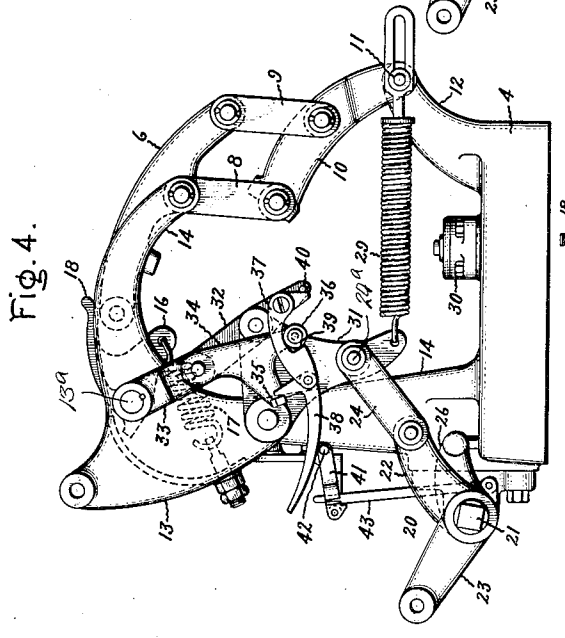

Fig. 4.

Inventor:
Herman J. H. Huber.
by Albert G. Davis
His Attorney.

July 17, 1923. 1,462,340

H. J. H. HUBER

ELECTRIC SWITCH

Filed Sept. 19, 1918 3 Sheets-Sheet 3

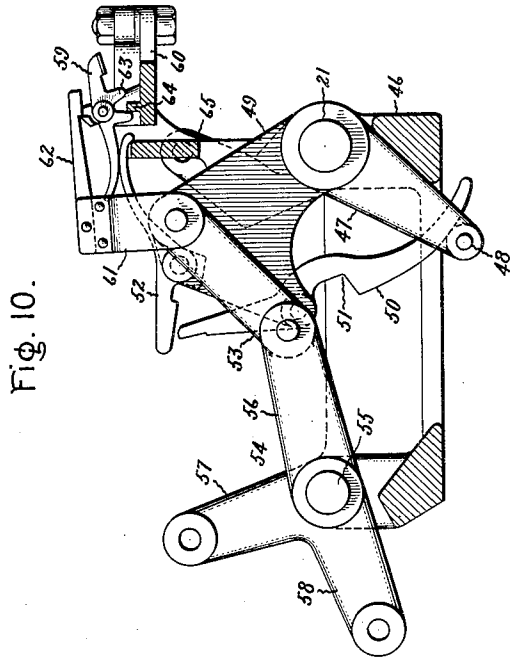

Fig. 10.

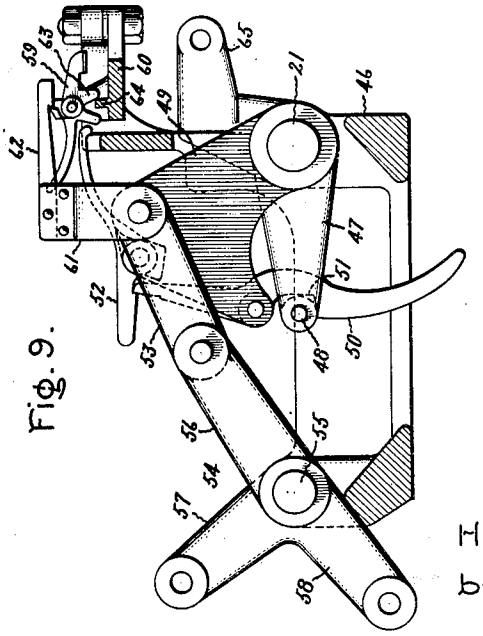

Fig. 9.

Inventor:
Herman J. H. Huber,
by Albert G. Davis
His Attorney.

Patented July 17, 1923. 1,462,340

UNITED STATES PATENT OFFICE.

HERMAN J. H. HUBER, OF SCHENECTADY, NEW YORK, ASSIGNOR TO GENERAL ELECTRIC COMPANY, A CORPORATION OF NEW YORK.

ELECTRIC SWITCH.

Application filed September 19, 1918. Serial No. 254,824.

To all whom it may concern:

Be it known that I, HERMAN J. H. HUBER, a citizen of the United States, residing at Schenectady, in the county of Schenectady, State of New York, have invented certain new and useful Improvements in Electric Switches, of which the following is a specification.

My invention relates to electric switches, and has for its object to provide an improved electric switch adapted for either hand or automatic operation and embodying a mechanism which is interchangeable, quick acting, and easily operated.

The novel features which I believe to be characteristic of my invention will be definitely indicated in the claims appended hereto, while the features of construction and mode of operation will be understood by reference to the following description taken in connection with the accompanying drawings, which show the preferred embodiments of my invention and in which:

Fig. 1 shows a side elevation partly in section of a multiple unit switch embodying the features of my invention, Figs. 2 and 3 are side elevations of the mechanism for one unit of the switch shown in Fig. 1 in the closed and open positions of the switch respectively, Figs. 4 and 5 are side elevations of a modified form of mechanism shown in switch closing and opening positions respectively, Fig. 6 is an end elevation of the mechanism, shown in Fig. 4, Fig. 7 is an end elevation, partly in section, of a multiple unit switch embodying a different arrangement of the mechanism, Fig. 8 is a detail view of a portion of the mechanism shown in Fig. 7, and Figs. 9 and 10 are views, partly in section, of an auxiliary means for my electric switch.

In Fig. 1, I have shown an electric switch comprising a plurality of units A, B and C, each unit having relatively movable cooperating contact members 1 and 2 separable beneath the surface of an insulating fluid contained in a vessel 3. In the illustration shown, only a portion of the vessel 3 and auxiliary structure are shown, in order to economize space. Each unit of the switch is provided with a separate mechanism which is of unitary character and is adapted to be assembled independently of the switch upon a base 4 which is adjustably mounted above the vessels 3, upon a suitable supporting framework, only the members 5 of which are shown, for puposes of clearness. Each mechanism comprises an operating mechanism mounted on one side of the base 4 which consists of an operating arm 6 connected at one end by means of a rod 7 to the movable contact 2. Preferably the end of arm 6 carrying the movable contact is movable in a straight line and for this purpose paralleling links 8 and 9 are connected at one end to the arm 6 and at the other ends to an arm 10. This operating mechanism is, therefore, of the parallel motion type. In order to increase the path of movement of the movable contact 2 and hence the rupturing capacity of the switch, the parallel motion or operating mechanism is adapted to be moved as a unit about an external axis and, for this purpose, arm 10 is pivotally mounted at one end at a point 11 upon an upright portion 12 on the base 4, the links 8 and 9 being so connected to the arm 10 that actuation of the arm 10 carries the parallel motion mechanism as a unit about the point 11 as an axis.

The actuating means for the parallel motion or operating mechanism for each unit, is mounted on the base 4 opposite the operating mechanism and includes an actuating member 13 pivotally supported upon an upright portion 14 on the base 4 and shaped to provide an elongated or extended portion or arm 15 which is connected to the parallel motion mechanism in such a manner that the actuating member in moving not only serves to actuate the parallel motion mechanism but also simultaneously serves to guide said mechanism with a straight line motion. I am able thus to combine in one member the dual functions previously performed by two members, the member 13 acting both as a guide link for the parallel motion mechanism and as a means for actuating the same. In the preferred form, the portion 15 of the actuating member 13 is bifurcated and connected to the operating mechanism by means of the operating arm 6, the arm being secured and movable between the bifurcated portions thereof. The connection of the actuating member 13 to the arm 6 possesses another advantage in that the operating or parallel motion mechanism is actuated with a minimum friction of parts. With mechanisms of this character, it has been the usual custom to actuate

the same by means of a force applied from below to the arm 10 the ease of operation being impaired by considerable friction such as at the pivotal point 11. By means of the actuating member described, the force is applied to the arm 6 and the whole mechanism pulled or lifted from switch opening to switch closing position with a minimum of friction of parts.

To further increase the rapidity of opening of the switch, I provide a means for accelerating the movement of the mechanism of each unit to switch opening position or in switch opening direction. For this purpose, pivotally carried by the member 13 between the bifurcated portions 15 is a member 16 biased, preferably, by a spring 17 and having a finger 18 which is engaged by the end of operating arm 6 in switch closing position, as best shown in Fig. 2, and held in this position against the tension exerted by spring 17. The energy stored in the spring 17 is delivered through the finger 18 to the end of the operating arm 6 to accelerate the movement of the mechanism in switch opening direction.

The mechanism, as described, for each unit of the switch, are adapted for operation either in tandem, that is, one in front of the other, as shown in Fig. 1 or side by side, as shown in Fig. 7, and are controlled from a common actuating mechanism. The common actuating mechanism is also adapted in both arrangements, for either automatic or non-automatic operation. It is understood that by the term automatic switch, I mean a switch which is automatically opened and through the agency of a collapsible connection, trips free from the handle. A non-automatic switch, on the other hand, is provided with a non-collapsible connection and does not open independent of the handle. Both types of switches may be solenoid or hand operated, but it is the general practice to make the hand operated switches, automatic and the solenoid operated switches non-automatic.

In the arrangement of the mechanisms of each unit in tandem, as shown in Fig. 1, the separate mechanisms are actuated by a common actuating mechanism associated with one unit of the switch, for instance, unit A and the separate mechanisms are operative simultaneously by means of an interconnecting member or rod 19 to which the actuating members 13 are connected. This common actuating mechanism is connected to the actuating member 13 for unit A and comprises members 20 secured to an actuating shaft 21, one member on each side of the upright portion 14. One of the members 20 consists, preferably, of a bell crank having arms 22 and 23, as shown in Figs. 2 and 3, while the other member 20 consists of the arm 22 only. The members 20 are connected by their arms 22, to links 24 to form actuating toggles. For connecting the actuating member 13 to the actuating mechanism, I provide interchangeable or replaceable connections adapted to be connected between the end of toggle link 24 and the member 13 to render the common actuating mechanisms operative either automatically or non-automatically as desired. In switches heretofore known in the art, automatically and non-automatically operated switches required separate and independent mechanisms, but according to my invention, I provide a mechanism which is convertible for either automatic or non-automatic operation by a simple interchange or replacement of parts. This replaceable connection consists, for automatic operation, of a collapsible connection, connected between the pivotal points 24^a and 13^a. To render this same switch non-automatic in operation, this collapsible connection is removable as a unit, and adapted to be replaced by a non-collapsible connection between the same pivotal points. In Fig. 1, and, in more detail, in Figs. 2 and 3 the replaceable connection between the actuating toggles 20—24 and actuating member 13 is shown for non-automatic operation of the switch. This connection is of the non-collapsible type and comprises members 25 detachably connected between the links 24 of actuating toggles 20—24 and the actuating member 13 or between the pivotal points 13^a and 24^a, the members 25 being adapted to be pivoted preferably on the pivot on frame 14 supporting the actuating member 13. A stop member 26 is also provided on shaft 21 so positioned relatively to the toggles 20—24 that they are held underset. The actuating force for the actuating mechanism is applied to arm 23 of toggle link 20 and as shown in Fig. 1, a solenoid mechanism 27 is mounted upon the support 5 of a type well known in the art comprising opening and closing coils. This mechanism is connected to the arm 23 by means of a connecting rod 28.

In switches of high rupturing capacity, such as herein disclosed, it is customary to provide heavy and rugged mechanisms requiring a considerable force to move from switch opening to closing position due to inertia and weight of the parts. I have overcome this disadvantage by associating with the common actuating machanism for the switch, means operative in response to the movement of the mechanism to switch opening position for assisting the switch closing movement of the mechanism. One embodiment of this means comprises an energy storing device such as resilient members or springs 29 connected at one end to the interchangeable connection between the actuating toggle 20—24 and actuating arm 13 and at the other end to the point 11.

The movement of the mechanism to switch opening position serves to tension springs 29 to thus partially absorb the energy of switch opening movement. In order not to impair the opening characteristics of the mechanism, the springs are connected to points 11 through lost motion connections thus providing a free initial movement of the mechanism, the tensioning of the springs 29 not taking place until near the end of the switch opening movement. The springs 29 are so arranged that when in energy storing position, the force exerted by the springs in switch closing direction is substantially equal to the weight of the mechanisms for all units of the switch so that the weight of the mechanisms is substantially balanced. The only force required to move the mechanism in switch closing direction is, therefore, that necessary to overcome friction of the parts.

The operation of the switch, as described, for non-automatic operation when the units thereof are arranged in tandem is apparent from the description. When the solenoid mechanism 27 operates to open the switch, rod 28 moves to buckle the toggles 20—24 and causes the links or replaceable connection members 25 to move the actuating members 13 for all the units through their common connection rod 19 about their pivots. The members 13 thereby carry the parallel motion or operating mechanisms for each unit simultaneously into switch opening position and at the same time guide the mechanisms so that the ends of the operating members 6 connected to the movable contacts move in a straight line. This movement to switch opening position is accelerated by the fingers 18 of the accelerating members 16 which exert a force upon arms 6 in switch opening direction due to the energy stored up in the springs 17. Due to the lost motion connection for the springs 29, no energy is stored in the springs during the initial switch opening movement thus affecting in no way the rapidity of operation but during the final switch opening movement, the movement of members 25 serves to tension springs 29 whereby the energy of switch opening movement is partially absorbed or stored up in the springs 29. The remaining energy of switch opening movement is absorbed by suitable buffer means for each separate mechanism such as oil dash pots 30 mounted upon each base 4. The position of the switch mechanism in switch opening position is shown in Fig. 3. As the springs 29 are arranged, when in switch opening position of the mechanism, to substantially balance the weight of the mechanisms for all units of the switch, the mechanisms are moved to switch closing position with a minimum effort as the force exerted by the tensioned springs is in switch closing direction. The movement of the actuating members 13 simultaneously lifts the parallel motion mechanisms about their respective external axes 11 and guides the mechanisms with straight line characteristics. As each of the members 13 is connected to one of the arms 6, the mechanisms are moved with a minimum friction of the parts. When the ends of the arms 6 reach the final switch closing position, they engage the fingers 18 of accelerating members 16 and move them to accelerating position tensioning springs 17.

If it is desired to change the switch, as described, from the non-automatic type to the automatic type adapted for hand operation, the solenoid mechanism 27 is removed and a hand actuating member, not shown, is operatively connected to arm 23 of the actuating toggle 20—24. The non-collapsible connection or member 25 is then removed from its pivotal connections 13^a and 24^a and replaced by a unitary collapsible or trip-free-from-the-handle connection, as shown in Figs. 4, 5 and 6. For hand operation, the stop members 26 are so related to the toggle members 20—24 that the toggle is held in an overset position. This collapsible connection comprises as a unit actuator members 31 connected to the pivotal points 24^a of links 24 of actuating toggles 20—24 and between the actuator members 31 and actuating member 13 are collapsible toggle members 32 and 33. Member 33, on one side of the actuating member 13, extends merely to its pivotal connection with member 32, as shown in Fig. 6, while on the other side of member 13, the member 33 has a portion 34, extending beyond its pivotal connection with member 32, as shown in Figs. 4 and 5, upon which is mounted a lug 35 and a pin 36. This collapsible connection, similar to the connection 25, is connected through actuator members 31 to the springs 29. The toggle members 32—33 are normally held latched or in thrust transmitting position by latching or restraining means connected between the portion 34 of member 33 and the end of corresponding member 32, comprising a member 37 pivotally carried on link 32 and a second latching or tail member 38 pivoted to the member 37 in a clevis therein. A recess 39 is provided in latching member 37 which in latching position, engages the pin 36 of member 33 and is held in the latching recess by the engagement of member 38 with the lug 35. A pin 40 on link 32 limits the movement of the member 37 to latching position.

Operatively related to the latching member 38 is a trip member or lever 41 supported by the upright portion 14 and carrying a tripping pin 42. The trip lever 41 is adapted for actuation either

automatically or in response to the hand operation of the switch. For actuating the trip lever 41 by hand, a rod 43 is provided operatively related to the lever and movable in response to rotation of the actuating shaft 21. For automatic operation of the trip lever, suitable electroresponsive devices may be mounted upon the upright portion 14, so that the trip lever is actuated thereby as well as in response to hand operation of the switch.

The switch mechanism, as described, adapted for automatic or hand operation is shown in switch closing position in Fig. 4. When trip lever 41 is moved either automatically or in response to the rotation of the shaft 21, the pin 42 engages the tail portion of member 38 causing the member to move out of engagement with stop 35 whereupon pin 36 is released from recess 39 as pin 36 carries a roller which is only held in the recess 39 as long as member 38 engages stop 35. Toggle 32—33 is then released and collapses free of the operating toggle 20—24 permitting the actuating members 13, through their interconnecting rod 19, to move their parallel motion mechanisms simultaneously under the acceleration of their springs 17 to switch opening position. In the collapse of the toggle 32—33, the pin 36 rides along the surface of latching member 38 and in switch opening position occupies the position shown in Fig. 5. For closing the switch, the shaft 21 with operating toggles 20—24 is rotated to resetting position carrying pin 36 along the members 38 and 37 until it slips into recess 39 whereupon member 38 again engages lug 35 and the toggle 32—33 is again latched. As the shaft 21 is rotated to straighten and latch the toggle 32—33, the actuating members 31 are moved in a direction to tension the springs 29. A reverse movement of the operating shaft 21, in switch closing direction, thereupon closes the switch the closing force being assisted by the energy stored in springs 29 as has been described.

In the form of switch described, the mechanisms for each unit are connected in what is known as tandem operation, that is, one unit in front of the other. As it is often impossible due to lack of space to mount a multi-pole switch in tandem, the switch of my invention is adapted for side by side operation, such an arrangement being shown in Fig. 7. For side by side operation, the mechanisms are adapted for both automatic or non-automatic operation by an interchange of parts as will be described. In this arrangement, the mechanism for each unit of the switch is the same whether the switch is automatically or non-automatically operated and comprises the same mechanism as shown in Figs. 2 and 3. These mechanisms are all mounted on the same actuating shaft 21 and movable simultaneously thereby. Instead of using separate actuating members 13 and members 25, these members may be made integral, omitting the portions of the actuating members 13 to which the rod 19 is adapted to be connected. Such integral members 44 are shown in Figs. 7 and 8. The common actuating mechanism for the switch comprises an interchangeable or replaceable mechanism adapted to be mounted upon the support 5 between two of the units of the switch and detachably connected to the common actuating shaft 21 as best shown in Fig. 8.

For nonautomatic operation, the solenoid mechanism 27 is used with its rod 28 connected to the arm 45. For automatic operation, the solenoid mechanism is replaced by an auxiliary mechanism shown in Figs. 9 and 10. This auxiliary replaceable mechanism is of the trip-free-from-the-handle or collapsible type and is removable as a unit, being mounted upon a base 46 through which is adapted to extend the common shaft 21. This mechanism comprises an arm 47 keyed to the shaft 21 for rotating the same and carries at one end a pin 48. Loosely mounted on the shaft 21 is a double-armed member 49 which carries pivotally supported thereon a latching member 50 having a recess 51 adapted to engage pin 48 of arm 47. Pin 48 is held in recess 51 by a second latching member 52 which is also pivotally supported by the member 49 and has a recess adapted to engage the upper end of latching member 50. The member 49 is actuated through a toggle comprising links 53 and 54. Link 54 is mounted on a shaft 55 and comprises three preferably integral arms 56, 57 and 58. Arm 56 is connected to link 53 and the operating handle for the switch is adapted to be connected by any suitable connection to either arms 57 or 58 depending upon where the handle is located.

The tripping means for the mechanism comprises a tripping member 59 which may be pivotally supported on an offset portion 60 secured to the base 46 and which is adapted to be actuated either automatically or in response to the hand operation of the switch. For automatic operation the portion 60 is replaced by a similar portion carrying electroresponsive devices which are operatively related to the trip lever 59. For hand operation, a trip actuating member 61 is provided, secured to the link 53 and comprising an arm 62 positioned to actuate the trip lever 59 which, in turn, moves the latch 52 into releasing position. In order to limit the movement of the trip lever 59, the lever is provided with two arms 63 between which is mounted a stop 64 carried by the offset portion 60.

The auxiliary replaceable mechanism is shown, in Fig. 9, in switch closing position. When trip lever 59 is actuated either automatically or in response to the initial opening movement of the switch by hand, the lever 59 strikes the end of latch 52 and moves it to releasing position whereupon latch 50 moves to permit pin 48 of arm 47 to move out of the recess 51. With the release of arm 47, the shaft 21 and arm 47 rotate simultaneously to actuate the switch mechanism for each unit of the switch, free from the remaining portion of the auxiliary mechanism. The arm 47 in moving to open the switch rides along the tail of latch 50 to the position shown in Fig. 10. The auxiliary mechanism is reset by moving the toggle 53—54 so that recess 51 in latch 50 again engages pin 48 of arm 47 whereupon latch 52 engages the end of latch 50 and the mechanism is latched so that a movement of the mechanism in switch closing direction closes the switch. Instead of the members 20 of the actuating toggle, for the mechanisms of each unit, I may substitute, for side by side operation, a member 65 as best shown in Figs. 9 and 10.

What I claim as new and desire to secure by Letters Patent of the United States, is:—

1. In an electric switch, the combination with relatively movable cooperating contacts, of a mechanism for moving said contacts, and a member connected to said mechanism in position to perform the dual function of actuating the same and causing the contacts operated thereby to move in a straight line.

2. In an electric switch, the combination with relatively movable cooperating contacts, of a mechanism for moving said contacts in a straight line, and means for actuating said mechanism including an actuating member for moving said mechanism connected thereto in position to cause said mechanism to operate with parallel motion characteristics.

3. In an electric switch, the combination with relatively movable cooperating contacts, of an operating mechanism for controlling said contacts movable as a unit about an axis external thereto, and an actuating member for simultaneously moving and guiding said mechanism to cause said mechanism to move said contacts in a straight line.

4. In an electric switch, the combination with cooperating fixed and movable contacts, an arm connected to said movable contact, means operatively related to said arm to form a parallel motion mechanism, means for moving said mechanism as a unit about an axis external thereto, and a pivotally mounted actuating member connected to said arm for controlling the operation of said mechanism.

5. In an electric switch, the combination with relatively movable cooperating contacts, of an operating mechanism including an operating arm connected to one of said contacts, a second arm movable about a fixed pivot, parallel links connected between said arms, and means for moving said mechanism as a unit about the pivotal connection of said second arm as an axis including an actuating arm connected to said first mentioned arm in position to cause one end of said first mentioned arm to move in a straight line.

6. In an electric switch, the combination with cooperating fixed and movable contacts, an arm connected to said movable contact, means operatively related to said arm to form a parallel motion mechanism, and means for moving said mechanism as a unit about an axis external thereto including a pivotally mounted actuating member connected to said arm to form a guide link for said parallel motion mechanism and means through which said mechanism is actuated.

7. In an electric switch, the combination with relatively movable cooperating contacts, an operating mechanism adapted to move said contacts in a straight line, actuating means for said operating mechanism and a pivotally mounted actuating arm connected between said actuating means and said operating mechanism, said arm serving to communicate the movement of said actuating mechanism to said operating mechanism and at the same time acting to guide said operating mechanism so that it operates with parallel motion characteristics.

8. In an electric switch, the combination with a vessel adapted to contain oil, relatively movable cooperating contacts separable beneath the surface of said oil, a support above said vessel, a unitary mechanism for controlling said contacts adapted to be adjustably mounted on said support comprising a base, an operating mechanism pivotally supported on one side of said base and connected to one of said contacts, and an actuating member for moving said operating mechanism pivotally supported on said base opposite said mechanism.

9. In an electric switch, the combination with relatively movable cooperating contacts, of a mechanism for controlling said contacts adapted to be assembled independent of the switch including a base, an actuating mechanism mounted on said base, an operating mechanism controlling said contacts mounted on said base opposite said actuating mechanism, and a member movable about a fixed point and engaging said operating mechanism to move the same in response to the actuation of said actuating mechanism.

10. In an electric switch, the combination with cooperating fixed and movable con-

tacts, a mechanism for controlling said contacts, an energy storing means associated with said mechanism rendered operative in response to the movement of said mechanism to switch opening position for exerting a force on said mechanism in switch closing direction to substantially counterbalance the weight of said mechanism.

11. In an electric switch, the combination with cooperating contacts, an operating arm for controlling said contacts, an actuating arm connected to said operating arm, means for actuating said actuating arm, connecting means between said actuating arm and said actuating means, and a spring connected to said connecting means operative to exert thereon a force for assisting said actuating means in the switch closing movement.

12. In an electric switch, the combination with cooperating contacts, of a mechanism for controlling said contacts comprising an operating arm, an actuating arm connected thereto, actuating means, and connecting means between said actuating arm and said actuating means, and spring connected to said connecting means and rendered operative in response to the movement of said controlling mechanism to switch opening position for exerting a force on said mechanism in switch closing direction.

13. In an electric switch, the combination with relatively movable cooperating contacts, of a mechanism controlling said contacts adapted to be assembled independent of the switch, said mechanism comprising a base, an actuating mechanism mounted at one end of said base, an operating mechanism pivotally supported at the other end of said base, and an energy storing means connected between said actuating mechanism and the pivotal support of said operating mechanism, said means being rendered operative in response to the movement of said switch to closed position to exert a force in switch opening direction substantially counterbalancing the weight of said switch mechanism.

14. In an electric switch, the combination with relatively movable cooperating contacts, an operating arm for controlling said contacts, an actuating arm connected to said operating arm, means adapted to be operated to actuate said actuating arm, energy storing means carried by said actuating arm and rendered operative in response to the movement of said operating arm in switch closing direction to exert a force thereon in switch opening direction, and a movable member carried by said actuating arm operative to deliver the force exerted by said energy storing means to accelerate the movement of said operating arm in switch opening direction.

15. In an electric switch, the combination with relatively movable cooperating contacts, an operating arm for controlling said contacts, an actuating arm connected to said operating arm, means adapted to be operated to actuate said actuating arm, energy storing means carried by said actuating arm, and a member carried by said actuating arm movable relatively thereto in one direction in response to the movement of said operating arm to switch closing position to store energy in said energy storing means and in the opposite direction by the energy stored in said energy storing means to deliver to said operating arm an initial impulse in switch opening direction.

16. In an electric switch, the combination with relatively movable cooperating contacts, of means for controlling said contacts comprising an operating mechanism, an actuating arm for moving said mechanism, an actuating means for said actuating arm, a collapsible mechanism detachably secured between said arm and said actuating means to render said switch automatic in operation, said collapsible mechanism being removable as a unit to permit its replacement by a mechanism for rendering said switch non-automatic in operation.

17. In an electric switch, the combination with relatively movable cooperating contacts, of an operating mechanism for moving said contacts, an actuating arm for controlling said mechanism, an actuating means for said actuating arm, and a collapsible connection detachably secured between said arm and said actuating means to render said switch automatic in operation, said collapsible connection being interchangeable as a unit with a mechanism for rendering the operation of said switch non-automatic.

18. An electric switch comprising a plurality of units, relatively movable cooperating contacts for each unit, a separate operating mechanism for controlling the contacts of each unit, a common rotatable shaft upon which said mechanisms are mounted for simultaneously operating the same, and an independently mounted actuating mechanism for rotating said shaft including an actuating means, a member secured to the shaft and a collapsible connection between said member and said actuating means.

19. An electric switch, comprising a plurality of units, relatively movable cooperating contacts for each unit, a separate operating mechanism for controlling the contacts of each unit, a common operating shaft upon which said mechanisms are mounted for simultaneous movement, and common alternative mechanisms adapted to be connected to said shaft to enable said shaft to be operated either automatically or non-automatically.

20. An electric switch comprising a plurality of units, relatively movable cooperating contacts for each unit, separate mech-

anisms for controlling the contacts of each unit arranged side by side, a common member interconnecting said mechanisms for simultaneous operation thereof, and an auxiliary collapsible mechanism removably connected to render said switch automatic in operation, said collapsible connection being removable as a unit to permit its replacement by a mechanism for rendering said switch non-automatic in operation.

21. An electric switch comprising a plurality of units, relatively movable cooperating contacts for each unit, separate mechanisms for controlling the contacts of each unit arranged side by side, a common member interconnecting said mechanisms for simultaneous operation thereof, and means independent of said mechanisms for actuating said member detachably secured to said member and including a trip-free-from-the-handle mechanism.

In witness whereof, I have hereunto set my hand this 18th day of September, 1918.

HERMAN J. H. HUBER.