Nov. 29, 1949 E. W. KNOWLTON 2,489,787

SAFETY CAP FOR GAS TANKS

Filed June 1, 1948

FIG. 1.

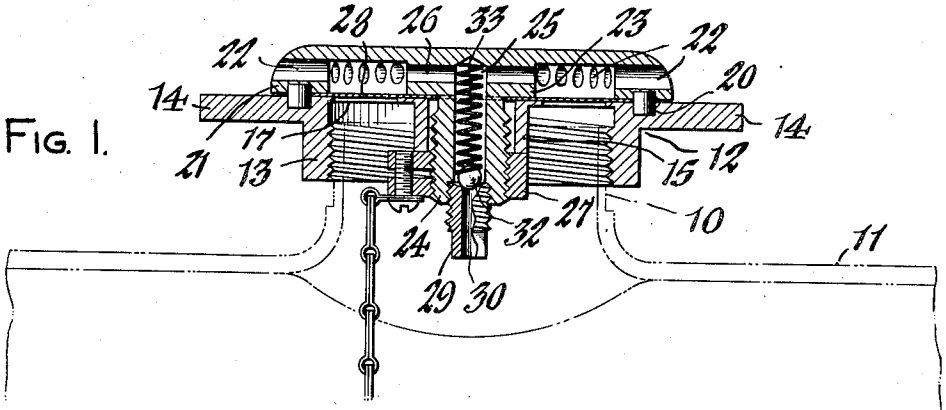

FIG. 2.

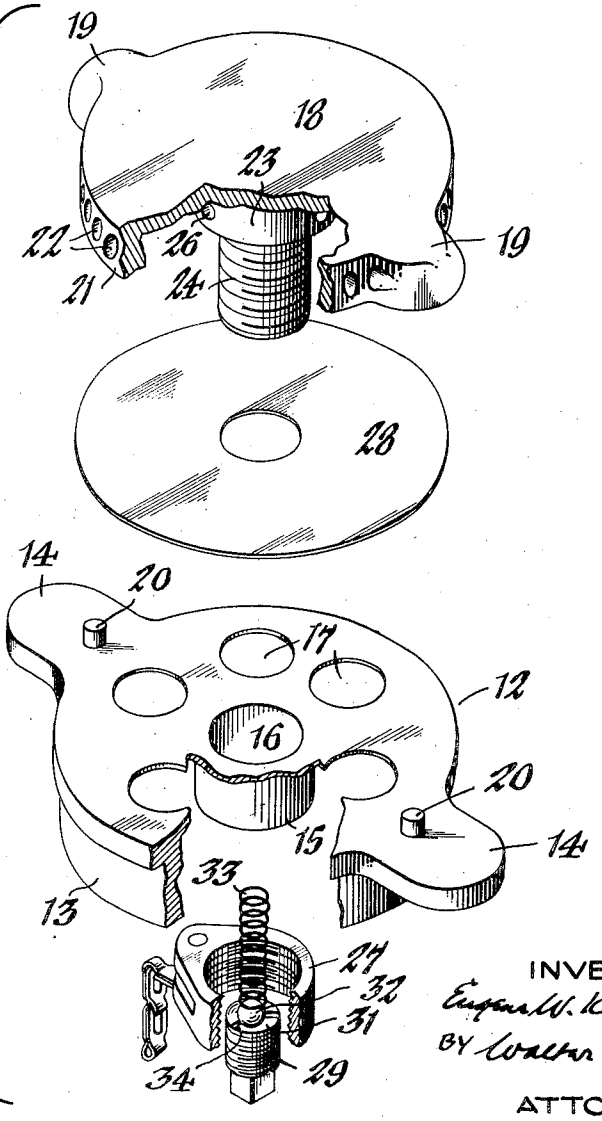

INVENTOR,
Eugene W. Knowlton,
BY Walter P. Geyer
ATTORNEY.

Patented Nov. 29, 1949

2,489,787

UNITED STATES PATENT OFFICE

2,489,787

SAFETY CAP FOR GAS TANKS

Eugene W. Knowlton, Buffalo, N. Y.

Application June 1, 1948, Serial No. 30,297

3 Claims. (Cl. 220—89)

1

This invention relates to certain new and useful improvements in a safety cap for tanks or containers used for storing gasoline and other combustible or volatile fluids.

One of its objects is to provide a protective cap of this character which is so designed and constructed as to insure the automatic venting of the tank should dangerous pressures and temperatures be generated therein as well as to permit the normal breathing of the tank.

Another object of the invention is to provide a combined pressure and temperture governed safety cap which is simple, compact, self-contained and inexpensive in construction, which can be readily dismembered for cleaning or replacement of its parts, and which is positive and reliable in operation.

Other features of the invention reside in the construction and arrangement of parts hereinafter described and particularly pointed out in the appended claims.

In the accompanying drawings:

Figure 1 is a cross section of the safety cap embodying my invention. Figure 2 is an exploded perspective view, partly in section, of the parts constituting the improved cap.

Similar characters of reference indicate corresponding parts throughout the several views.

By way of example, my safety cap has been shown applied to the externally threaded neck-opening 10 of a tank 11 filled with gasoline or like fluid. In its preferred construction, this cap consists of a body 12, substantially circular in plan, having an internally-threaded, annular attaching flange 13 depending from its bottom side for detachable connection to the neck-opening of the tank. Ears 14 project from diametrically opposite sides of this body to facilitate screwing it to and unscrewing it from the tank. Depending centrally from the cap-body is a collar 15 providing an axial opening 16 and formed in the top wall of such body in an annular row about this collar are openings 17 which function, under certain conditions, as vents for the escape of pressures generated in the tank.

Detachably applied to the top side of the cap-body 12 and forming therewith the self-contained cap structure is a cover 18 which is likewise substantially circular in plan and of a size to extend over the body-openings 16, 17 and which has ears 19 projecting from its diametrically opposite sides having sockets therein for registering with dowel pins 20 rising from the top face of the body for properly centering the cover on the latter and preventing relative turning of such parts. This cover has an annular depending flange 21 having a plurality of radial vent openings 22 therein and its bottom edge rests flatwise on the top side of the cap-body, as shown in Figure 1, to provide a venting chamber between the body and the cover. Depending centrally from the cover 18 is a hub or collar 23 having a reduced, externally-threaded extension or shank 24 containing an axial passage 25 whose upper end communicates with a plurality of intersecting radial passages 26 and whose lower end is adapted to be in valve-controlled communication with the interior of the tank to which the cap is applied. In the assembled position of the cap, this extension projects through the body-opening 16 and a split nut 27 applied thereto and abutting the opposing end of the collar 15 serves to securely retain the cover against the top side of the body 12. Fitted between the collar and flange portions of the cover and the vent openings 17 of the cap-body is a fusible disk or washer 28 which fuses and melts in response to a predetermined temperature condition within the tank to uncover such vent openings and allow the expanding gases to escape through the cover-vents 22.

2

A valve-like screw plug 29 is fitted in the lower end of the cap-extension 24 and is provided with an axial opening 30 therein terminating at its upper end in an upwardly-facing valve seat 31 normally engaged by a ball valve 32 and urged against the same by a coil spring 33 fitted in the axial passage 25 of such extension. One or more venting grooves 34 are formed in the valve seat 31 to permit normal venting of the tank. With expanding pressures generated in the tank, the ball valve opens and the tank is promptly vented through the passages 30 and 25 and the vent openings 26 and 22.

I claim as my invention:

1. A safety cap for containers, comprising a cap-body adapted for connection to the container and having an opening centrally thereof and vent openings in its top wall, a vented, chambered cover applied to the top wall of said body over said vent openings and having a hollow attaching extension depending therefrom through said body-opening for communication at its upper end with the chamber of the cover and at its lower end in valved communication with the tank, and a fusible disk interposed between said body and said cover over the vent openings of the former.

2. A safety cap for containers, comprising a cap-body adapted for connection to the container and having an opening centrally thereof and vent

openings in its top wall, a vented, chambered cover applied to the top wall of said body over said vent openings and having an attaching extension depending therefrom containing an axial passage opening at its lower end into the tank and at its upper end into the chamber of the cover, said passage being provided at its lower end with a valve-seat, a spring-urged valve disposed in said passage and normally engaging its seat, and a fusible disk interposed between said body and said cover over the vent openings of the former.

3. A safety cap for containers, comprising a cap-body adapted for connection to the container and having a depending collar defining a central opening and vent openings in its top wall about the same, a cover detachably mounted on the top wall of said body and shaped to provide a chamber having vent openings at its periphery, said cover having a threaded attaching extension depending therefrom containing an axial passage opening at its lower end into the tank and

at its upper end into the chamber of the cover, a nut applied to said extension for abutting engagement with said body-collar to retain the cover in place, said passage being provided at its lower end with a valve-seat, a spring-urged valve disposed in said passage and normally engaging its seat, and a fusible disk interposed between said body and said cover over the vent openings of the former.

EUGENE W. KNOWLTON.

REFERENCES CITED

The following references are of record in the file of this patent:

UNITED STATES PATENTS

Number	Name	Date
2,273,737	Snyder	Feb. 17, 1942

FOREIGN PATENTS

Number	Country	Date
1,405	Great Britain	1919