Jan. 25, 1955 P. PAWLYK 2,700,365

APPARATUS FOR PLATING SURFACES WITH CARBONYLS AND OTHER VOLATILE METAL BEARING COMPOUNDS

Filed Oct. 8, 1951 2 Sheets-Sheet 1

FIG-1

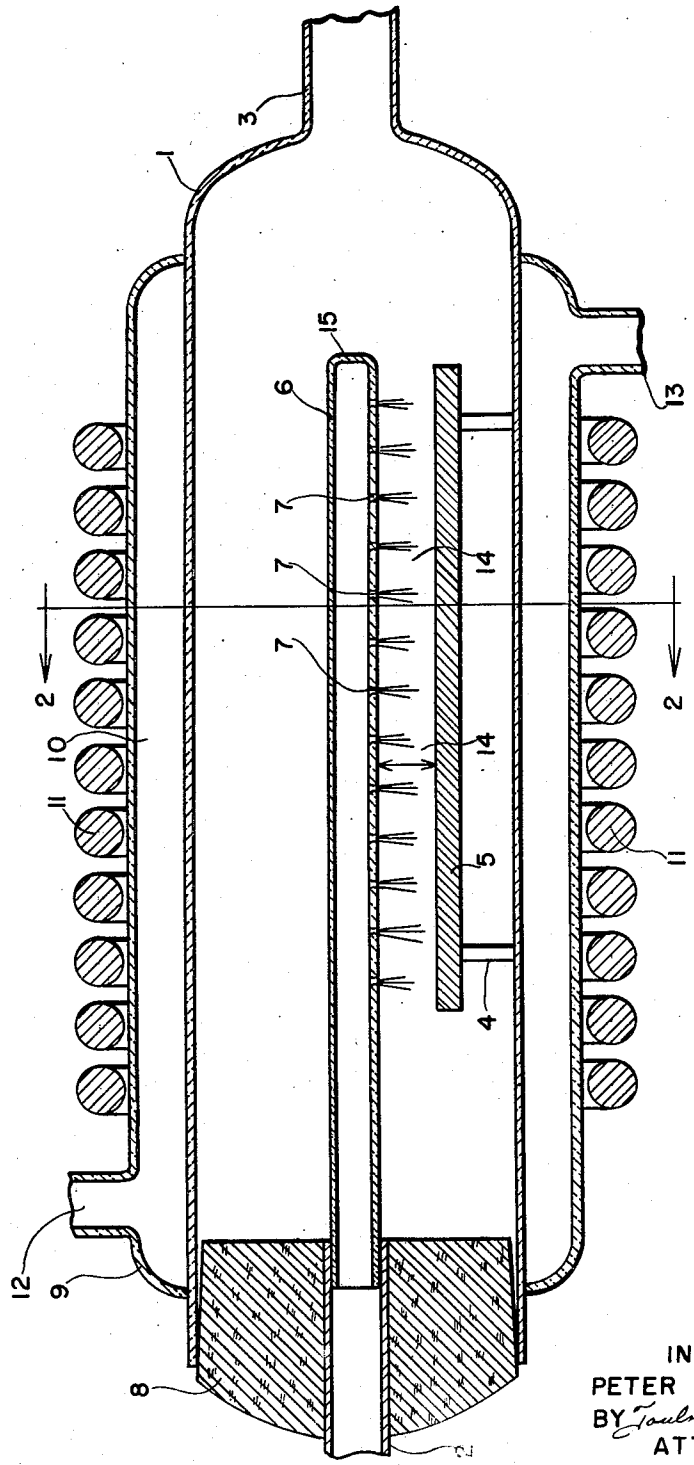

INVENTOR
PETER PAWLYK
BY Toulmin & Toulmin
ATTORNEYS

Jan. 25, 1955 P. PAWLYK 2,700,365

APPARATUS FOR PLATING SURFACES WITH CARBONYLS AND OTHER VOLATILE METAL BEARING COMPOUNDS

Filed Oct. 8, 1951 2 Sheets-Sheet 2

FIG-3

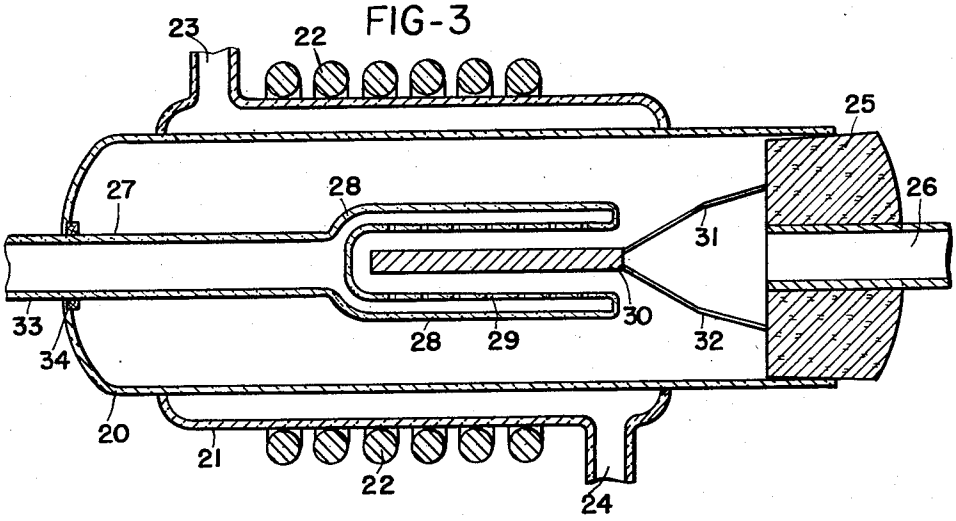

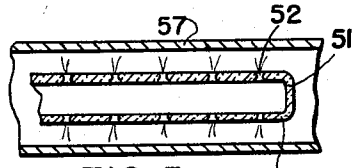

FIG-5

FIG-2

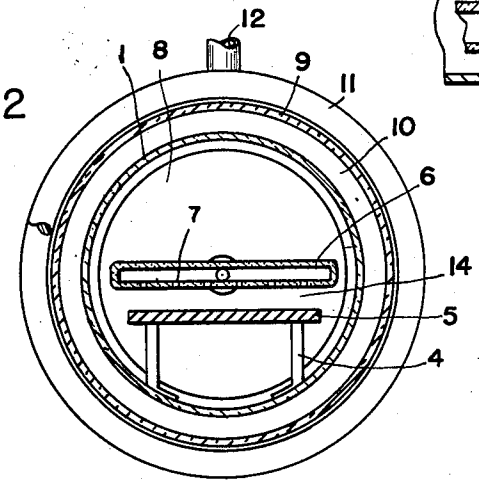

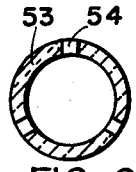

FIG-6

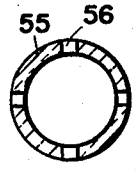

FIG-7

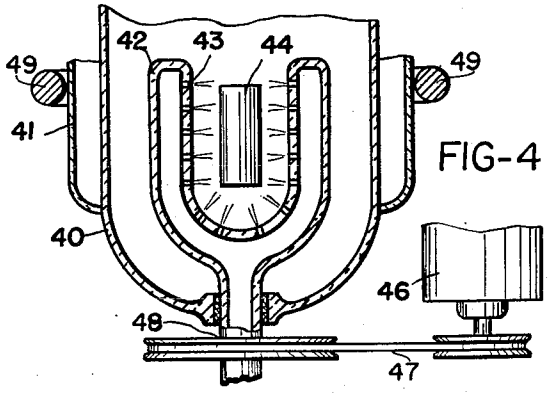

FIG-4

INVENTOR
PETER PAWLYK
BY Toulmin & Toulmin
ATTORNEYS

United States Patent Office 2,700,365 Patented Jan. 25, 1955

2,700,365

APPARATUS FOR PLATING SURFACES WITH CARBONYLS AND OTHER VOLATILE METAL BEARING COMPOUNDS

Peter Pawlyk, Dayton, Ohio, assignor to The Commonwealth Engineering Company of Ohio, Dayton, Ohio, a corporation of Ohio

Application October 8, 1951, Serial No. 250,301

8 Claims. (Cl. 118—48)

This invention relates to improved apparatus for the plating of objects by the decomposition of metal bearing compounds.

The plating of metallic parts with metals, by the pyrolysis of gaseous metal bearing compounds and the deposition of the metallic component of the gas, requires close control of decomposition conditions in order that a fine uniform deposit may be attained. Preferably the pyrolysis should take place at the surface of the workpiece. However since the workpiece must be heated, the atmosphere in known apparatus also becomes heated giving rise to premature decomposition of the metal bearing gases. Also since the metal bearing compounds are heated to place them in the gaseous state, incidental contact with heated apparatus surfaces in the passage to the workpiece may give rise to premature decomposition.

Whatever the manner in which premature decomposition occurs the result is a plated workpiece of inferior quality since the deposited coating may suffer from nonuniformity, pin holes and poor adhesion to the plated object.

It is a primary object of this invention to provide improved and novel apparatus for the deposition of metallic coatings from metal bearing gases.

It is an important object of this invention to provide apparatus in which the point of decomposition of metal bearing gases, with relation to the position of the workpiece, may be controlled.

It is a principal object of this invention to provide apparatus for the passage of metal bearing gases to a workpiece which apparatus is substantially not affected by the temperature prevailing in the workpiece.

These and other allied objectives which will become apparent hereinafter are attained by providing an envelope of head insulating material and positioning the metal object to be plated therein in spaced relation with passage means of a heat insulating material defining jet apertures for the passing of metal bearing gases to the workpiece, the workpiece being inductively heated by means positioned without the envelope. With such a structural arrangement the heat conductive workpiece only will be heated by the heat source, the heat insulating material of the envelope and passage means or gas carrying member being resistant to temperature change by the inductive heat source.

Preferably a cooling means is provided around the envelope to assist in dissipation of heat which may be carried thereto by convection or radiation from the workpiece. Normally this effect on the envelope will be small but since the heat exchange between the envelope and workpiece is a function of temperature of the workpiece, gas pressure conditions within the envelope, the distance between the said elements, and so forth, in very compact apparatus some cooling means may be essential.

The gas carrying member may similarly be slightly affected by the heated workpiece but the effect of the heated gases moving therethrough will be sufficient generally to render any slight temperature rise in this member negligible.

The heat insulating materials for the apparatus may be glass, ceramic, fabrics and impregnated fabrics, etc.

The articles which may be readily plated in the apparatus of invention include iron, steel, nickel, copper and any heat conductive metal which is subject to being heated by inductive methods.

In the practice of the process the temperature of the incoming metal bearing gases, the rate of flow of these

gases, the decomposition temperature of the gases and the temperature at which the workpiece is maintained, as well as the gas pressure within the envelope, affect the decomposition point of the compound. However each of these variables may be so controlled in the apparatus that application of the metal bearing gas in jet streams closely adjacent the workpiece results in controlling the decomposition point. The formation of the gas into jets and the subjection of these jets to the influence of the heat emanating from the workpiece results in a constant temperature rise in the gas as it traverses the space to the workpiece until the decomposition temperature is attained at substantially the instant at which the gas strikes the workpiece.

Carrier gases for the metal bearing gases may be used in the apparatus and process of invention and these include carbon dioxide, nitrogen, helium, etc., that is those gases which are inert to the object and the plating metal.

The invention will be more fully understood by reference to the following description and accompanying drawings wherein:

Figure 1 is a sectional view of one embodiment of the apparatus of invention;

Figure 2 is a view taken on line 2—2 of Figure 1;

Figure 3 is a sectional view of another embodiment of the invention having provision for simultaneously coating both sides of a workpiece;

Figure 4 is a view of apparatus wherein the gas carrying member revolves about the workpiece;

Figure 5 is a view of apparatus for the internal coating of workpieces;

Figure 6 is a cross-sectional view of the gas carrying member of Figure 5; and

Figure 7 is a cross-sectional view of a modified form of the gas carrying member of Figure 5.

Referring to Figures 1 and 2 there is shown an envelope **1** of glass having a glass stopper **8** in an opening thereof, the opposing end of the envelope being provided with an outlet **3**. Mounted in the bore of the stopper **8** is a connecting tube **2** supporting a gas carrying member **6** of glass, and the left hand end of tube **2** being connected to a source of plating gas (not shown); the other end of gas carrying member **6** is sealed as at **15**. This gas carrying member **6** of dielectric or heat insulating material is provided as shown at **7** with apertures which face towards a heat conductive workpiece **5** mounted on heat insulating support means **4**. In the embodiment shown, for the purpose of explanation, the gas carrying member may be considered to have a diameter of ¼–½ inch and a length of about 15 inches. This member is positioned 1½ to 2 inches from the workpiece surface.

Surrounding the envelope **1** is a water jacket **9** having an inlet **12** and outlet **13**. Adjacent the water jacket **9** and outside of the envelope **1** is an inductive heat source in the form of a coil **11** electrically connected to a power supply (not shown). In the embodiment shown the space **10** between the envelope and outer wall of the jacket may be considered to be about ¾ inch.

In the operation of the device of Figures 1 and 2 when plating with nickel carbonyl gas onto a steel workpiece, and utilizing carbon dioxide as a carrier gas for the nickel carbonyl, the chamber is first flushed free of air and other gases prior to entry of the plating gases by passing CO_2 therethrough in accordance with standard practice. The temperature of the entering mixture of plating gases at **2** is preferably in the range of 70–90° F. and this will rise to a temperature in the range of 120° F. to 200° F. at a point about 1 inch above the workpiece which is at a temperature of 375° plus or minus 5° F. A temperature of about 145° F. is extremely satisfactory and measurements indicate that this temperature may be attained in the apparatus if the flow rate of gas is about 20 cubic feet per hour of entering gas and the chamber pressure is about 5–7 pounds per square inch absolute, the coil being controlled to provide a frequency of 100 to 300 kc. at low voltage. To attain this chamber pressure outlet **3** of chamber **1** may be connected to a vacuum pump in the manner known to the art. Under these conditions a .002 inch plate of nickel may be attained over the steel in about four minutes. The deposition, due to the gradual

temperature rise as the gas moves to the workpiece, is uniform, adherent to the steel and without pinholes.

The chamber pressure is not critical, and a pressure of plating atmosphere as low as .1 mm. of mercury may be employed, the lower pressures however resulting in a longer plating time for a given thickness of metal coat.

The water jacket for satisfactory operation may pass about 0.5 gallon per minute at a temperature of between about 35° to 60° F.

In the structure shown in Figure 3 workpiece 30 is shown supported by members 31 and 32 extending from the stopper 25 which closes the plating chamber and which is provided with an outlet 26 for the passage of waste gases. The workpiece 30 in this instance extends into the yoke formed by the arms 28, 28 of the gas carrying member which is supplied with the metal bearing gas through an outer tube 33 sealed in the wall of envelope 20 as at 34. The plating gas passes through tube portion 27 of heat insulating or dielectric material and emerges through apertures 29 onto the workpiece 30 heated from coils 22. The cooling jacket having an inlet 23 and outlet 24 performs the same function as jacket 9 of Figure 1. This Figure 3 arrangement is particularly suited for coating both sides of a workpiece in one operation.

The structure of Figure 4 is similar to that of Figure 3 except the yoke member 42 enclosing workpiece 44 is rotatably driven by motor 46 through belts 47, the driven pulley being about the hollow outwardly extending shaft 48 of the gas carrying member 42. The heating coil 49, only a portion of which is shown for sake of clarity, is similar to and functions in the same manner as coil 22 of Figure 3.

In the structure shown in Figure 5 a cylindrical gas carrying member 50 closed at one end and provided around the periphery thereof with apertures 52 may be positioned in an element 57 and the interior of the element plated uniformly by effecting revolution of the gas carrying member 50 by means similar to that described in connection with Figure 4. The apertures 52 may have the geometrical configuration shown in Figures 6 or 7 or other suitable arrangement to conform to specific plating requirements.

Figure 6 shows a triangular arrangement of apertures 54 in a gas carrying member 53, while Figure 7 shows a quadrilateral arrangement of apertures 56 in a gas carrying member 55. The particular arrangement of the apertures and the number thereof may be increased as required for given depositions of coating thicknesses, diameter of gas carrying member and diameter of object to be plated.

All metal-bearing gases which are subject to decomposition by heat to result in the deposition of the metallic component may be suitably employed in the process and apparatus of invention. Thus the carbonyls of nickel, iron, chromium, molybdenum and cobalt may be utilized; the hydrides such as antimony hydride or tin hydride are effective; other compounds include chromyl chloride, osmium carbonyl bromide, copper nitroxyl and cobalt nitrosyl carbonyl. In the use of these compounds it is only essential that the vaporization temperature of the compound not be excessively exceeded when the gas is produced and that the gas be protected in its passage to the plating chamber from heat effects which would raise the temperature to that which would initiate decomposition. For example, with nickel carbonyl the temperature should be maintained below 175° F. until the gas is formed into jet streams for the carbonyl may start to decompose slowly at this temperature. However if such gas issues from the gas carrying member at about 160° F. substantially no decomposition will occur in the moving gases until they strike the workpiece. Nickel carbonyl decomposes rapidly at temperatures in excess of 375° F. which is considered to be the decomposition temperature of the gas.

This application is related to copending applications Serial Nos. 250,302; 250,303; 250,304; 250,305; 250,306; and 250,307; all filed October 8, 1951, and all by the same inventor as the present application.

It will be understood that this invention is susceptible to modification in order to adapt it to different usages and conditions and accordingly, it is desired to comprehend such modifications within this invention as may fall within the scope of the appended claims.

I claim:

1. Apparatus for the metallic plating of heat conductive objects by pyrolysis of metal-bearing gaseous compounds, comprising an envelope of heat insulating material having means therein to support an object to be plated, a gas carrying member of heat insulating material mounted internally of said envelope in spaced relation with said support means, said member having apertures therein facing towards said support means, means to maintain the envelope cool, and means positioned outside of said envelope for inductively heating a heat conductive workpiece when mounted on said support means.

2. Apparatus for the metallic plating of heat conductive objects by pyrolysis of metal-bearing gaseous compounds comprising an envelope of heat insulating material having means therein to support an object to be plated, a gas carrying member of heat insulating material mounted internally of said envelope in spaced relation with said support means, said member having apertures therein facing towards said support means, means for maintaining the envelope cool, and an induction heating coil positioned outside of said envelope and surrounding the same for inductively heating a heat conductive workpiece when mounted on said support means.

3. Apparatus for the metallic plating of heat conductive objects by pyrolysis of metal-bearing gaseous compounds comprising an envelope of heat insulating material having means therein to support an object to be plated, a gas carrying member of heat insulating material mounted internally of said envelope in spaced relation with said support means, said member having apertures therein facing towards said support means, means positioned outside of said envelope for inductively heating a heat conductive workpiece when mounted on said support means, and cooling means positioned between said inductive heating means and said support for the cooling of said envelope.

4. Apparatus for the metallic plating of heat conductive objects by pyrolysis of metal-bearing gaseous compounds comprising an envelope of heat insulating material having means therein to support an object to be plated, a longitudinally extending gas carrying member of heat insulating material mounted internally of said envelope in spaced relation with said support means, said member having apertures therein spaced along the longitudinal axis thereof and towards said support means, means positioned outside of said envelope for inductively heating a heat conductive workpiece when mounted on said support means, and cooling means positioned between said heating means and said support means for the cooling of said envelope.

5. Apparatus for the metallic plating of heat conductive objects by pyrolysis of metal-bearing gaseous compounds comprising an envelope of heat insulating material having means engaging the envelope to support an object to be plated, a yoke-shaped gas carrying member of heat insulating material mounted internally of said envelope in spaced relation with said support means and positioned to receive a workpiece between the legs of said yoke, said member having apertures in each leg thereof facing towards said support means, means for maintaining the envelope cool, and means positioned outside of said envelope for inductively heating a heat conductive workpiece when mounted on said support means.

6. Apparatus for the metallic plating of heat conductive objects by pyrolysis of metal-bearing gaseous compounds comprising an envelope of heat insulating material having means engaging the envelope to support an object to be plated, a yoke-shaped gas carrying member of heat insulating material mounted internally of said envelope in spaced relation with said support means and positioned to receive a workpiece between the legs of said yoke, said member having apertures in each leg thereof facing towards said support means, means positioned outside of said envelope for inductively heating a heat conductive workpiece when mounted on said support, and means for rotating said yoke-shaped gas carrying member, and cooling means positioned between said heating means and said support means for the cooling of said envelope.

7. Apparatus for the metallic plating of heat conductive objects by pyrolysis of metal-bearing gaseous compounds comprising an envelope of a ceramic material having means therein to support an object to be plated, a gas carrying member of glass mounted internally of said envelope in spaced relation with said support means, said member having apertures therein facing towards said sup-

port means, and means positioned outside of said envelope for inductively heating a heat conductive workpiece when mounted on said support means and cooling means positioned between said inductive heating means and said support means for the cooling of said envelope.

8. Apparatus for the metallic plating of heat conductive objects by pyrolysis of metal-bearing gaseous compounds comprising an envelope of glass having means therein to support an object to be plated, a gas carrying member of heat insulating impregnated fabric material mounted internally of said envelope in spaced relation with said support means, said member having apertures therein facing towards said support means, and means positioned outside of said envelope for inductively heating a heat conductive workpiece when mounted on said support means and cooling means positioned between said inductive heating means and said support means for the cooling of said envelope.

References Cited in the file of this patent

UNITED STATES PATENTS

2,285,017	Christensen	June 2, 1942
2,332,309	Drummond	Oct. 19, 1943
2,344,138	Drummond	Mar. 14, 1944
2,508,509	Germer et al.	May 23, 1950
2,516,058	Lander	July 18, 1950
2,576,289	Fink	Nov. 27, 1951
2,602,033	Lander	July 1, 1952