TRUCK DOOR LOCK

Filed Sept. 21, 1967 3 Sheets-Sheet 1

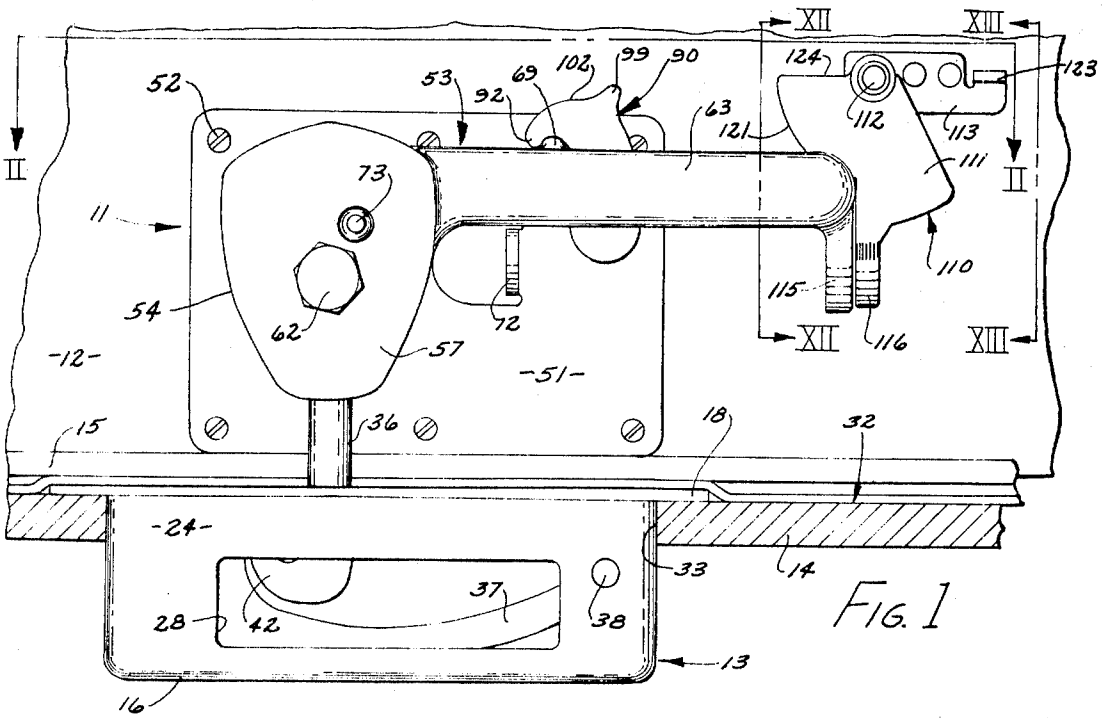

FIG. 1

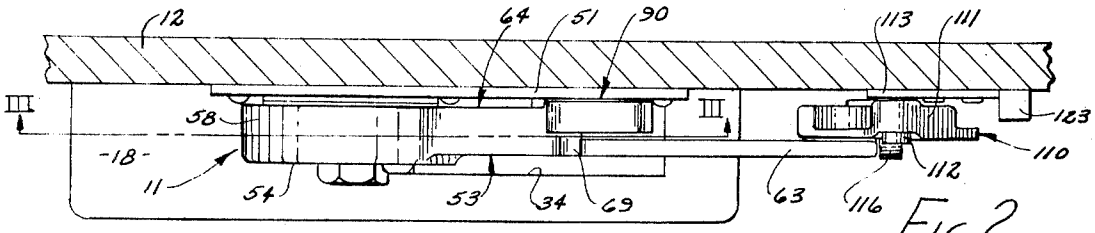

FIG. 2

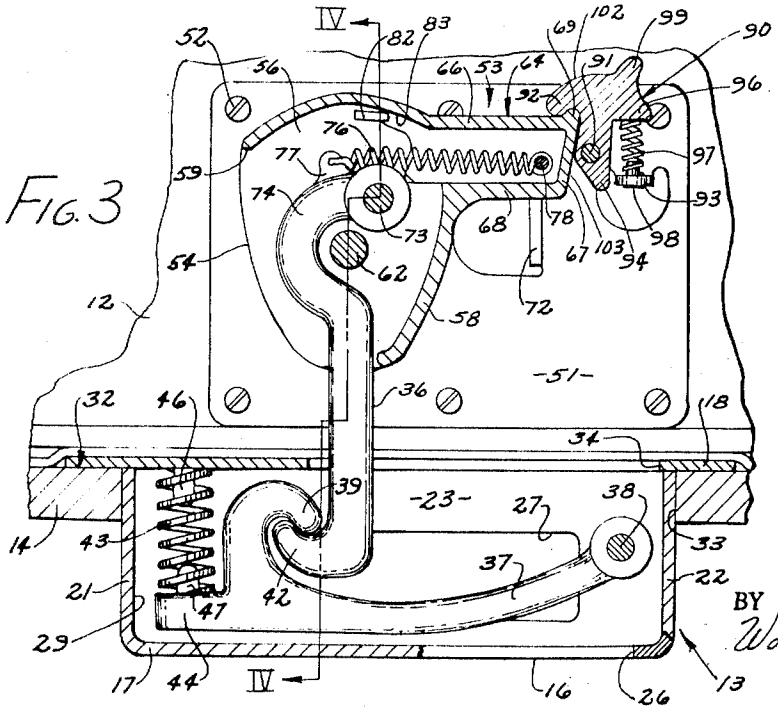

FIG. 3

INVENTOR.
VERNON O. SMITH
BY Woodhams, Blanchard & Flynn
ATTORNEYS

TRUCK DOOR LOCK

Filed Sept. 21, 1967 3 Sheets-Sheet 2

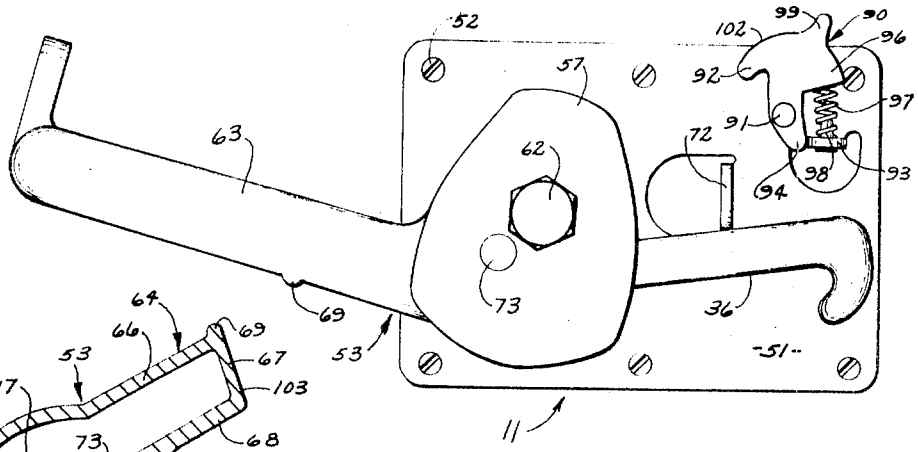

FIG. 7

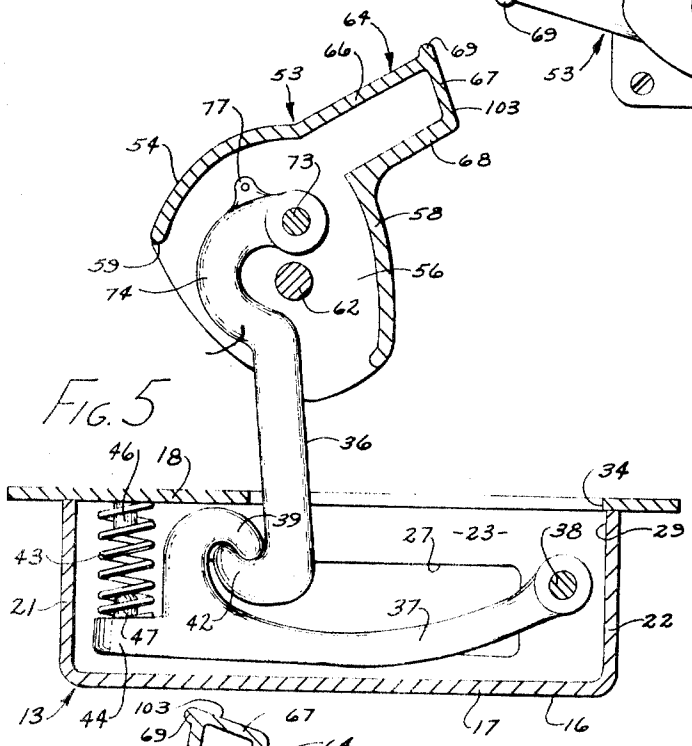

FIG. 5

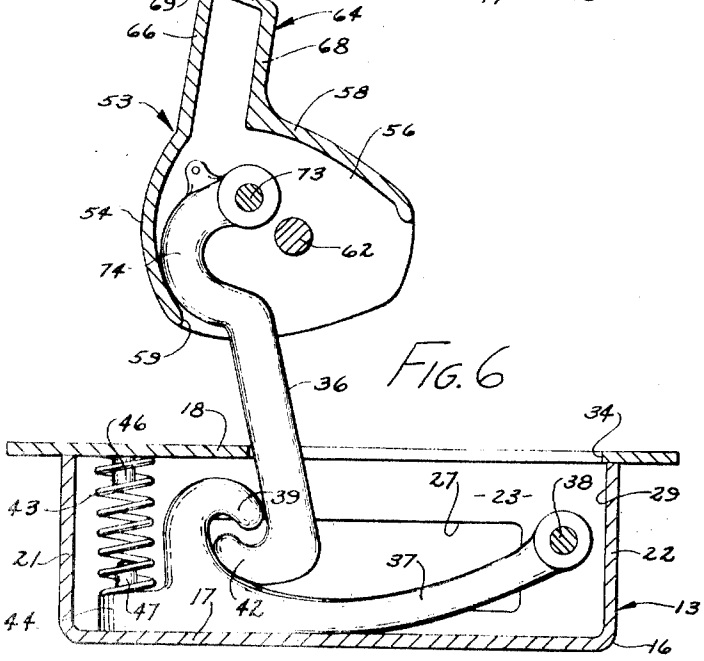

FIG. 6

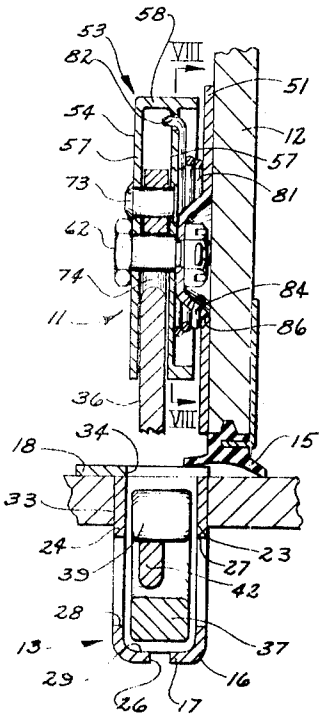

FIG. 4

INVENTOR.
VERNON O. SMITH
BY
Woodhams, Blanchard & Flynn
ATTORNEYS

TRUCK DOOR LOCK

Filed Sept. 21, 1967 3 Sheets-Sheet 3

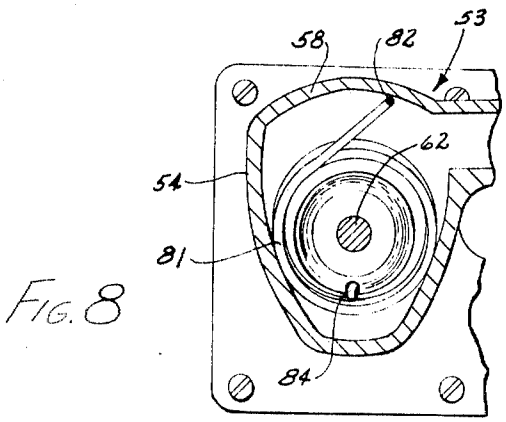

FIG. 8

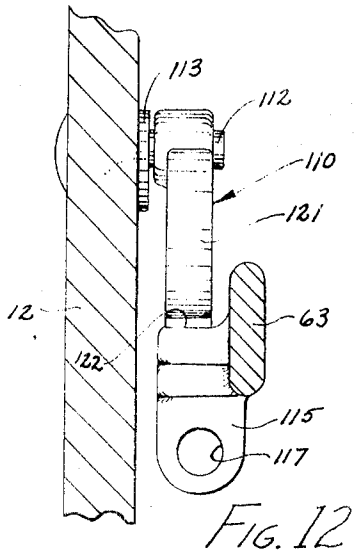

FIG. 12

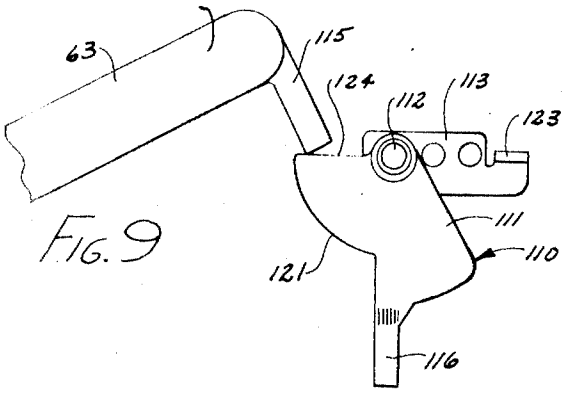

FIG. 9

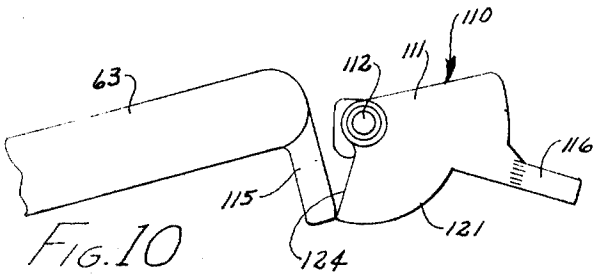

FIG. 10

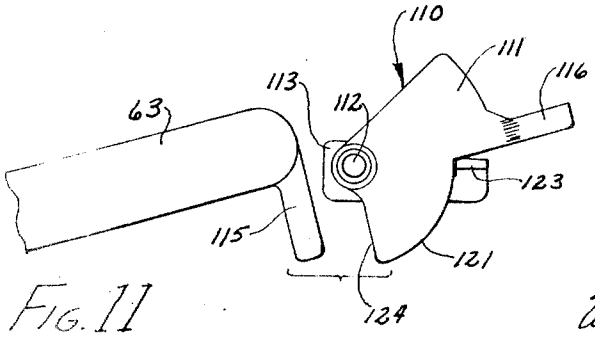

FIG. 11

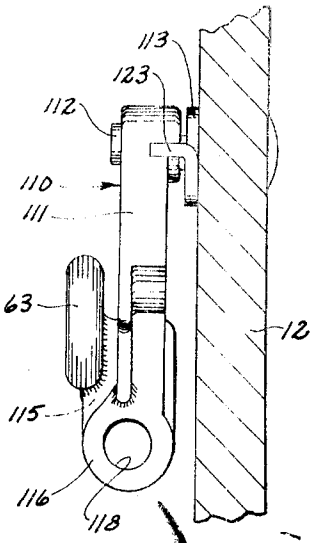

FIG. 13

INVENTOR.
VERNON O. SMITH
BY
Wadhams, Blanchard & Flynn
ATTORNEYS

United States Patent Office

3,514,142

Patented May 26, 1970

1

3,514,142
TRUCK DOOR LOCK

Vernon O. Smith, Ashley, Ohio, assignor to Overhead Door Corporation, Marion, Ohio, a corporation of Indiana

Filed Sept. 21, 1967, Ser. No. 669,481
Int. Cl. E05b *15/02;* E05c *19/72*
U.S. Cl. 292—113 9 Claims

ABSTRACT OF THE DISCLOSURE

A lock structure for an upwardly-acting door of a truck van wherein a latch bolt is pivotally supported upon a manually operable arm which is in turn pivotally supported upon the lower end of the door. The latch bolt is adapted to extend below the lower edge of the door for engagement with a resiliently biased catch mounted in the truck bed. A keeper, which is arranged for automatically holding the actuating arm in the latched position, can be easily rendered inoperative.

BACKGROUND OF THE INVENTION

This invention relates in general to a lock structure for an upwardly-acting truck door and, more specifically, to a type thereof which is capable of adjusting automatically to avoid looseness in the door incident to wear or the tolerances of conventional installation, and which is incapable of accidental opening.

Persons familiar with the manufacture and maintenance of upwardly-acting doors for truck vans, for example, have long been aware that the lock structures for such doors are subject to unusually rough treatment from the substantially normal conditions of use to which they must be exposed. That is, they are constantly exposed to the weather, they are often battered, or exposed to strains by, the loads carried by the truck, and they are frequently subjected to excessive and destructive forces when the truck or other vehicle upon which they are mounted moves over uneven terrain. As a result, any looseness in the connections of the latching mechanism, which can be produced by normal wear, by improper initial adjustment or by a slightly defective part, will quickly produce excessive and abnormal wear or even complete failure. Where this looseness involves the connection between the latch bolt and its catch, the result is a "dancing door" which obviously aggravates the problem and accelerates failure. That is, because the loose connection does not firmly hold the door in its closed position, the door will tend to vibrate in a variety of directions as the vehicle thereof moves along substantially any terrain.

By reference to the structure disclosed in Pat. No. 3,108,833, it will be seen that existing latch bolts are usually provided with some type of lengthwise adjustment to remove looseness between the hook portion of the latch bolt mounted on the door and the normally rigid catch attached to the truck. Frequently this adjustment is effected by means of a threaded connection between the shank of the latch bolt and the hooked portion at the lower end thereof. This construction adds materially to the cost of the lock construction and, more importantly, creates additional problems. For example, if the hooked portion is accidentally moved during operation, it may be out of alignment with the catch and either fail to make a secure connection or damage the catch box, due to its improper positioning.

In addition to the foregoing problems of wear, accelerated failure and maladjustment of the lock structure, there is the further problem that a worn lock mechanism

2

may open of its own accord and thereby permit the door to raise and expose, or even accidentally discharge, the load from the truck as it is moving along a road.

Accordingly, a primary object of this invention is the provision of an improved lock structure for an upwardly acting truck door wherein the lock structure is automatically adjusted to avoid looseness resulting from normal wear, minor errors in installation and acceptable tolerances in parts, whereby the useful life of the lock structure and/or the door would be severely reduced.

A further object of this invention is the provision of a lock structure, as aforesaid, in which the one-piece latch bolt is mounted so that it can be removed from its latched position only by overcoming a resiliently flexible force urging it into the locked position and wherein the actuating arm of the lock mechanism is engageable by a gravity operated keeper, which can also serve as a sealing device and which can be moved into a completely inoperative position when desired.

A further object of this invention is the provision of a lock structure, as aforesaid, which requires no adjustment when installed and which cannot be disengaged by the shocks created when the truck upon which the lock structure is mounted is moved over unusually rough terrain.

A further object of this invention is the provision of a lock structure, as aforesaid, which can be installed in a manner corresponding to existing lock structures by any person capable of installing such existing lock structures and which can be easily operated by any person capable of operating the truck.

Other objects and purposes of the invention will become apparent to persons who understand lock structures upon reading the following descriptive material and examining the accompanying drawings, in which:

FIG. 1 is a side elevational view of the lock structure embodying the invention as appearing on a fragment of a truck door structure.

FIG. 2 is a sectional view taken along the line II—II in FIG. 1.

FIG. 3 is a sectional view taken along the line III—III in FIG. 2.

FIG. 4 is a sectional view taken along the line IV—IV in FIG. 3.

FIG. 5 is a fragment of FIG. 3 showing part of the structure thereof in a different position of operation.

FIG. 6 is a fragment of FIG. 3 showing the structure of FIG. 5 in another position of operation.

FIG. 7 is a fragment of FIG. 1 showing part of the structure thereof in a different position of operation.

FIG. 8 is a sectional view taken along the line VIII—VIII in FIG. 4.

FIG. 9 is a fragment of FIG. 1 showing part of the structure thereof in a different position of operation.

FIG. 10 is a fragment of FIG. 1 showing the structure of FIG. 9 in another position of operation.

FIG. 11 is a fragment of FIG. 1 showing the structure of FIG. 9 in a further position of operation.

FIG. 12 is a sectional view taken along the line XII—XII in FIG. 1.

FIG. 13 is a sectional view taken along the line XIII—XIII in FIG. 1.

For convenience in description, the terms "upper," "lower," "left," "right," "front," "rear" and words of similar import will have reference to the lock structure of the invention and the parts of the truck door construction associated therewith as appearing in FIG. 1 which discloses the rear side of the lock structure. The terms "inner," "outer" and derivatives thereof will have reference to the lock structure of the invention and parts associated therewith.

SUMMARY OF THE INVENTION

The objects and purposes of the invention, including those set forth above have been met by providing a lock structure comprising a catch box mounted in the bed of a truck or similar vehicle, and a latch mechanism mounted upon an upwardly acting door of the truck van and having a latch bolt engageable with a resiliently biased catch in the catch box. The latch bolt is pivotally mounted upon an actuating member having an arm which is engaged by a primary keeper and a secondary keeper, said secondary keeper being movable into an inoperative position during periods when the lock mechanism is being operated frequently. The latch bolt is mounted on the actuating member so that the spring bias of the catch tends to oppose the initial unlocking movement of the actuating member.

DETAILED DESCRIPTION

The lock structure of the invention, a preferred embodiment of which is disclosed in FIGS. 1 and 2, is comprised of a latch assembly **11**, which is mounted upon the lower end of an upwardly acting door **12** for engagement with a catch assembly **13** which is mounted in the bed **14** of an otherwise substantially conventional truck van, of which the door **12** is a part. In this particular embodiment, the door **12** is comprised of a plurality of horizontally hinged sections which are disposed in a substantially vertical plane when the door is closed and in a substantially horizontal plane near the room of the van when the door is open. A resiliently flexible weather seal **15** (FIG. 4) is mounted upon the lower edge of the door **12** and is engageable with the bed **14** in a conventional manner and for conventional purposes. A truck door of this general type is disclosed in U.S. Pat. No. 3,227,205, which is assigned to the assignee of this application.

The catch assembly **13** (FIGS. 1, 3 and 4) is comprised of an elongated, substantially rectangular casing **16** which is preferably fabricated from sheet steel to form a bottom wall **17**, a top plate **18**, a pair of end walls **21** and **22** (FIG. 3) and a pair of sidewalls **23** and **24** (FIG. 4). The bottom wall **17** has an elongated, narrow slot **26** through which moisture and the like can drain. The sidewalls **23** and **24** have openings **27** and **28**, respectively, through which dirt and other foreign material can escape from the chamber **29** within said casing **16**. The top plate **18** preferably extends beyond the end walls **21** and **22** and the sidewall **23** for engagement with the upper surface **32** (FIG. 1) of the bed **14** when the casing **16** is located within the opening **33** in the bed **14**. The top plate **18** has an opening **34** through which the latch bolt **36** is loosely and swingably received, as shown in FIGS. 3 and 6.

The catch assembly **13** includes a catch lever **37** which is pivotally supported at its rightward end (FIG. 3) upon a pivot pin **38** which is secured to and extends between the sidewalls **23** and **24** of the casing **16**. The catch lever **37** has near its leftward end an integral hook **39** which projects upwardly and then curves rightwardly and downwardly for engagement with a cooperating hook **42** on the latch bolt **36**. The opening **34** is located in the top plate **18** so that a substantial portion of the hook **39** is covered by the top plate **18**. Accordingly, the pivotal movement of the catch lever **37** is positively limited by and between the top plate **18** and the bottom wall **17**.

A spiral spring **43** (FIG. 3) is disposed between and constantly held under compression between the top plate **18** and the leftward end portion **44** of the catch lever **37**. Guide pins **46** and **47** are mounted upon and project toward each other from the top plate **18** and the left end **44** of lever **37** for reception into the opposite ends of the spiral spring **43** whereby accidental lateral displacement thereof is prevented.

In this embodiment, the spring **43** exerts a downward force against the catch lever **37** of approximately 100 pounds, near the point of engagement between the hooks **39** and **42**, when the lever **37** is bearing against the bottom wall **17**. Movement of the hook **39** into engagement with the undersurface of the top plate **18**, against the contrary urging of the spring **43**, requires a force, exerted near the point of the connection of the hooks **39** and **42**, of approximately 500 pounds. This arrangement of forces is designed for an average upwardly acting truck door and, therefore, can be varied as desired to meet the specific requirements of the type and weight of the door involved. In fact, a wide range of variations in these forces can be achieved merely by using a different spiral spring **43**.

It has been found that a lever **37** (FIG. 3) capable of approximately one-half inch of movement in the region of the hook **37** is adequate for overcoming maladjustments of installation and distortion of the associated door and lock parts resulting from the usual wear and rough treatment to which the door and the associated truck structure are exposed.

The top plate **18** (FIG. 1) may be secured to the bed **14** by welding, by screws or any other convenient, conventional means.

The latch assembly **11** (FIG. 1) has a mounting plate **51** which is secured to the outer surface of the door **12** adjacent the lower edge thereof by means of bolts or rivets **52**. A latch support member **53** is comprised of a substantially oval-shaped housing **54** having front and rear sidewalls **56** and **57**, respectively, which are interconnected by a peripheral wall **58** having a substantial opening **59** (FIG. 3) along a substantial portion of the housing **54**. The latch support member **53** is rotatably supported upon the mounting plate **51** by an axle **62** which is rigidly secured to the mounting plate **51** and is rotatably received through appropriate openings in the sidewalls **56** and **57** of the housing **54**.

The latch support member **53** (FIG. 1) has an integral arm or handle **63** which projects from the housing **54** in a direction substantially radially of the axle **62** and on the opposite side thereof from the opening **59** in the peripheral wall **58**. The arm **63** includes an integral, frontwardly extending and substantially U-shaped spring housing **64** (FIG. 3) including an upper flange **66** and a web **67** which extends between the upper flange **66** and the lower flange **68**. The web **67** projects upwardly slightly above the upper flange **66** to provide a ridge **69** for reasons appearing hereinafter.

The mounting plate **51** (FIG. 3) has an integral, rearwardly extending stop flange **72** which is preferably struck from the plate material and is engageable by the lower flange **68** to positively limit clockwise rotation of the latch support member **53** around the axle **62**. The latch bolt **36** is rotatably supported at its upper end upon the pivot pin **73** which is located above and substantially rightwardly of the axle **62** when the flange **68** is in engagement with the flange **72** and the arm **63** is substantially horizontal, as appearing in FIG. 1. Thus, during the initial movement of the latch support member **53** away from its fully latched position of FIG. 3, the latch bolt **36** and lever **37** must be raised somewhat, as shown in FIG. 5.

The latch bolt **36** is preferably (but not necessarily) in one piece and has a substantially semicircular upper end **74** which curves around the leftward side of the axle **62** so that the bolt will not interfere with the clockwise, unlatching movement of the latch support member **53**, as appearing in FIG. 6. A spiral spring **76** is held under tension between an integral ear **77** on the upper end **74** of the latch bolt **36** and an anchor pin **78** (FIG. 3) projecting from the arm **63** into the space between the flanges **66** and **68** near the web **67**. Thus, the latch bolt **36** is constantly urged in a clockwise direction around its pivot pin **73**.

A coil spring **81** (FIG. 4), which encircles the axle **62**, has a hook **82** at its rearward end (FIG. 3) which is engaged in the slot **83** in the front sidewall **56** of the housing **54**. Said spring **81** has a hook **84** (FIG. 4) on the front-

ward end which is received through a slot **86** in the mounting plate **51**. The coil spring **81** is under constant tension whereby it urges the latch support member **53** is a counterclockwise direction, as appearing in FIG. 8, toward a position in which the latch bolt **36** engages the lower edge of the flange **72** and the upper part of the peripheral wall **58** (FIG. 3). The peripheral wall **58** may extend, as shown in FIG. 4, somewhat beyond the front sidewall **56** of the housing **54** in order to provide a weather shield for the coil spring **81**.

A primary keeper **90** (FIG. 3) is pivotally mounted upon a pivot pin **91** which is rigidly secured to the mounting plate **51** near, but rightwardly of, the web **67** on the arm **63**. The primary keeper **90** has an integral, downwardly opening hook **92** which is engageable with the ridge **69** on the U-shaped projection **64**, when in its FIG. 3 position, for positively preventing upward or counterclockwise movement of the U-shaped projection **84**, hence of the arm **63**.

A spring support flange **93** is integral with and preferably struck rearwardly from the mounting plate **51** adjacent to and rightwardly of a downward projection **94** on the primary keeper **90**. Accordingly, engagement of the flange **93** by the projection **94** positively limits counterclockwise movement of the keeper **90** around the pivot pin **91**. The primary keeper **90** has a rightward projection **96** which overlies the flange **93**, and a spiral spring **97** is held under compression between the flange **93** and the rightward projection **96**, thereby constantly urging the primary keeper **90** in a counterclockwise direction, as appearing in FIG. 3, so that the projection **94** is positively urged toward the flange **93**. However, the stop flange **72** is located so that the hook **92** firmly engages the ridge **69** just before the projection **94** engages the flange **93**. A pin **98** is secured to the flange **93** and is received upwardly into the spring **97** for positioning same.

A thumbgrip **99** is integral with and projects upwardly from the primary keeper **90** for manually moving same against the contrary urging of the spring **97** away from engagement with the ridge **69**, after which the latch support member **53** can then be rotated in a counterclockwise direction. The upper surface **102** of the hook **92** and the rightward surface **103** of the web **67** are shaped so that downward, clockwise movement of the latch support member **53** from its FIG. 5 position toward its FIG. 3 position will automatically cause the web **67** to rotate the primary keeper **90** in a clockwise direction until the ridge **69** can slide under the hook **92** and be positively gripped thereby.

The secondary keeper **110** (FIG. 1) is comprised of a substantially flat body member **111** which is pivotally supported near the upper edge thereof by the pivot pin **112**. The pivot pin **112** is in turn rigidly secured to a support plate **113** which is riveted or bolted to the door **12** so that the pivot pin **112** is preferably (but not necessarily) spaced at a point from the axle **62** slightly greater than the distance between said axle and the outer end of the arm **63**. The arm **63** has a downward and frontward projection **115**, which is located at the outer end (FIGS. 1 and 12) of the arm **63** when the keeper pivot pin **112** is located as specified above. The projection **115** is engageable on its rightward side by the lug **116** which is integral with and extends downwardly from the body member **111** of the keeper **110**. The lug **116** is preferably located on the body member **111** so that it hangs directly below the pivot pin **112** under the influence of gravity. The projection **115** and lug **116** (FIGS. 11 and 12) have openings **117** and **118**, respectively, which are aligned when latch assembly **11** is in its normal latched position of FIG. 1.

The body member **111** (FIG. 1) has an arcuate edge **121** which extends over and is engageable by the upper edge **122** (FIG. 12) of the projection **115** when the keeper **110** is in its normal depending position. Accordingly, if the primary keeper **90** should be accidentally disconnected from the ridge **69** and if simultaneously the spring **43** should fail, the presence of the arcuate edge **121** in the path of the projection **115** will positively prevent the latch support member **53** from rotating in a counterclockwise direction, under the influence of the coil spring **81** or by irregular movements of the truck, for example, and thereby releasing the hook **42** from the hook **39**.

An integral flange **123** (FIG. 1) is provided on the support plate **113** rightwardly of the pivot pin **112** for engagement by the lug **116** (FIG. 11), in which position the keeper **110** is completely inoperative with respect to the movement of the latch support member **53** and its arm **63**.

The secondary keeper **110** can be manually moved out of its position obstructing upward movement of the arm **63** by manually engaging the lug **116** and moving same in a counterclockwise direction around the pin **112** and away from the projection **115**. However, when the arm or handle **63** is returned toward its latched position of FIG. 1, the projection **115** strikes the upper edge **124** of the body member **111** on the leftward side of the pivot pin **112** and thereby pivots the keeper **110** out of its way, as shown in FIGS. 9 and 10, until the projection **115** reaches a position below the arcuate edge **121** whereupon the keeper **110** will swing into its FIG. 1 position and thereby block upward movement of the projection **115**, hence the arm **63**.

The length and radius of the arcuate edge **121** are preferably selected so that the edge **121** cannot be moved away from a position obstructing the upward movement of the projection **115** when a conventional sealing ring or loop is threaded through the openings **117** and **118** and sealed.

OPERATION

The operation of the door lock structure described above will be apparent from such description to a person of ordinary skill in the performance and/or manufacture of truck door locks. However, primarily for the purpose of convenience, the lock operation will now be summarized. The lock structure of the invention will normally be manufactured and installed so that the upper end of the hook **39** on the catch lever **37** will be spaced from the top plate **18**, and the lower surface of the catch lever **37** will be spaced from the bottom wall **17** when the catch assembly **13** is properly engaged by the latch assembly **11** in their FIG. 1 and FIG. 3 positions. Thus, the catch assembly **13** will be urging the latch assembly **11**, hence the door **12**, toward the bed **14** with a force of somewhere between 100 and 500 pounds. Much of this force will be absorbed by the compression of the resilient weather seal **15** between the lower edge of the door **12** and the bed **14**.

When it becomes desirable to disengage the latch bolt **36** from the catch lever **37**, the secondary keeper **110** is rotated in a counterclockwise direction, the primary keeper **90** is pivoted in a clockwise direction and the handle **63** is manually urged upwardly and pivoted around the axle **62**. With the latch bolt **36** arranged and supported upon the latch support member **53** as appearing in FIG. 3, the spiral spring **43** will oppose initial upward movement of the arm **63**, because such movement will necessitate a slight raising of the latch bolt **36**, hence a further compression of the spiral spring **43**. The purpose of this arrangement is to further avoid the possibility of an accidental unlatching of the bolt **36** from the catch lever **37**. However, it will be recognized that this further precaution can be omitted merely by placing the pivot axis of the pivot pin **73** substantially directly above the axle **62**.

Further counterclockwise rotation of the latch support member **53**, as to its position of FIG. 6, will permit the spiral spring **43** to move the catch lever **37** into its lower-

most position against the bottom wall **17**. Thus, the hook **42** on the latch bolt **36** can then be rotated with the support member **53** in a counterclockwise direction through the opening **34** in the top plate **18**. The spiral spring **76** (FIG. 3) will tend to urge the latch bolt **36** into its FIG. 8 position with respect to the support member **53**, and the coil spring **81** will urge the latch support member **53** toward its FIG. 7 position with respect to the plate **51**, where they will remain until it becomes desirable to reconnect the latch bolt **36** with the catch lever **37**. This is accomplished by merely rotating the latch support member **53** in a clockwise direction after the door **12** is located in its substantially closed position of FIG. 1. The primary and secondary keepers **90** and **110** will be automatically moved out of the way of the latch support member as it moves into the latched position. Also, the latch bolt **36** will be swung through the opening **34** in the plate **18** and will automatically engage the lever hook **39**.

Should the spiral spring **43** break during normal operation, it will permit the catch lever **37** to move upwardly and downwardly substantially between a position against the top plate **18** and some position spaced slightly below the top plate. However, due to the urging of the spiral spring **76** (FIG. 3), the latch bolt **36** will be positively and continuously urged to remain in engagement with the hook **39** on the catch lever **37**, and the top plate **18** will positively limit the upward movement of the lever **37**, and thereby act as a fail safe limit for the latch bolt **36**.

The embodiments of the invention in which an exclusive property or privilege is claimed are defined as follows:

1. In an upwardly acting door for a truck having a bed, a door lock structure, comprising:

an actuating member pivotally mounted upon the door near the lower edge thereof for movement around a first axis parallel with said bed when said lower edge is adjacent thereto;

a latch bolt pivotally secured to said actuating member near said first axis for movement around a second axis parallel with said first axis, said latch bolt having a hook portion adapted to extend below said lower edge of said door;

wall means fixedly secured to said bed and defining a chamber therein, at least a portion of the top of said chamber being open for permitting said latch bolt to extend therein;

a lever disposed within said chamber and pivotally secured near one end thereof to said wall means for pivotal movement around a third axis substantially parallel with and located below said first and second axes;

hook means on said lever near the other end thereof and engageable with the hook portion of said latch bolt for maintaining the lower edge of said door closely adjacent to said bed;

stop means interconnected to said wall means and adapted to coact with a portion of said lever for limiting upward pivotal movement thereof relative to said bed; and

resilient means coacting between said wall means and said lever for urging said hook means downwardly away from said stop means.

2. A lock structure according to claim **1**, wherein said resilient means includes spring means coacting between said lever and said wall means, said spring means contacting said lever at a position spaced radially outwardly from said hook means relative to said third axis.

3. A lock structure according to claim **1**, wherein the longitudinally extending direction of said lever is substantially transverse to the longitudinally extending direction of said latch bolt when the hook portion of said latch bolt is in engagement with the hook means on said lever.

4. A lock structure according to claim **1**, wherein said third axis is vertically spaced below said first and second axes and is horizontally laterally offset therefrom whereby swinging movement of said lever causes said hook means to move substantially in a vertical direction, whereas swinging movement of said latch bolt about said second axis as the hook portion of said latch bolt approaches said hook means causes said hook portion to move substantially in a horizontal direction.

5. A lock structure according to claim **1**, including an elongated arm on said actuating member having a projection thereon spaced substantially from said first axis;

hooked keeper means pivotally supported upon said door near said edge and engageable with said projection for holding said arm in a predetermined position when the hook portion of said latch bolt and the hook means of said lever are engaged and opposing the urging of said resilient means; and

second resilient means yieldably urging said hooked keeper means toward said position of engagement with said projection.

6. A lock structure according to claim **5**, including a second projection on said arm remote from said first axis;

a cammed keeper pivotally supported upon said door near said lower edge thereof, the pivot axis of said cammed keeper being spaced from said first axis a distance greater than the distance between said first axis and said second projection;

means defining an arcuate cam edge on said cammed keeper extending through a substantial arc and engageable with said second projection for opposing upward movement of said second projection when said arm is substantially in said predetermined position;

lug means on said cammed keeper engageable with said second projection for preventing rotation of the cammed keeper in one rotational direction when said arm is in said predetermined position; and

bracket means secured to said door structure near said cammed keeper engageable by said lug means for holding said cammed keeper completely out of the path of movement of said arm and said actuating member.

7. In a lock structure for an upwardly acting truck door having a lower edge engageable with the bed of the truck, said lock structure having a latch bolt mounted upon the door and adapted to extend below the lower edge of the door, a catch box comprising:

an elongated casing defining a lever chamber having top wall means, said casing being secured to said bed, and said top wall means having an opening through which said latch bolt is receivable;

an elongated lever disposed within said lever chamber and pivotaly secured near one end thereof to said casing for movement around an axis substantially parallel with said bed and transverse of said lever;

hook means on said lever near the other end thereof and engageable with said latch bolt opposing movement of said latch bolt away from said casing, said hook means being spaced below and engageable with said top wall means; and

resiliently flexible means between said top wall means and the other end of said lever yieldably urging said hook means away from said top wall means.

8. In a lock structure for an upwardly acting door of a truck having a bed, said lock structure including a manually operable arm pivotally mounted upon said door, and a latch bolt connected to said arm near the pivot axis thereof and engageable with a catch mounted in said bed when said arm is in a predetermined position, keeper means for holding said arm in said predetermined position, comprising:

lateral projection means fixedly secured to said arm

and spaced substantially from the pivot axis of said arm;

a keeper pivotally mounted upon said door near the lower edge thereof at a distance from said first-mentioned axis which is different from the distance between said projection means and said first-mentioned axis;

lug means on said keeper positionable adjacent to and engageable with said projection means when said arm is in said predetermined position for limiting rotation of said keeper in one direction;

said projection means and said lug means each having an opening therein with said openings being positionable substantially in alignment with one another when said arm is in said predetermined position and said lug means is positioned adjacent said projection means;

said keeper having an arcuate edge substantially concentric with the pivot axis of the keeper and engageable with said projection means when said lug means is near said projection means for positively preventing upward movement of the adjacent end of said arm away from said predetermined position; and

bracket means secured to said door structure near said keeper for engagement by said lug means to support said keeper in an inoperative position completely out of the path of upward movement of said arm away from said predetermined position.

9. A lock structure according to claim **8**, wherein said arcuate edge is approximately 90 degrees in extent so that said lug means can be moved a substantial distance

away from said projection means without effecting disengagement of said arcuate edge by said projection means; and

said lug means being integrally connected to said arcuate edge adjacent one end thereof and extending outwardly therefrom in a direction substantially radially relative to the pivot axis of said keeper; and

said projection means and said lug means each having planar surfaces thereon adapted to be positioned adjacent one another when in said predetermined position whereby said openings are substantially aligned for permitting reception of a sealing ring.

References Cited

UNITED STATES PATENTS

1,250,574	12/1917	Ferris	292—113
1,495,373	5/1924	Witten	292—108
1,495,374	5/1924	Witten	292—136
2,523,845	9/1950	Roseburrough	292—108
2,741,505	4/1956	Courney	292—341.17
3,045,464	7/1962	Braginetz	70—144
3,108,833	10/1963	Christensen et al.	292—113
3,346,288	10/1967	Cosentino	292—92
3,399,921	9/1968	Trost et al.	292—35

MARVIN A. CHAMPION, Primary Examiner

R. L. WOLFE, Assistant Examiner

U.S. Cl. X.R.

292—108, 341.17