July 9, 1929. J. E. SERSTÉ 1,720,063

WINDOW OPERATING APPARATUS

Filed Aug. 10, 1927 2 Sheets-Sheet 1

Fig. 1.

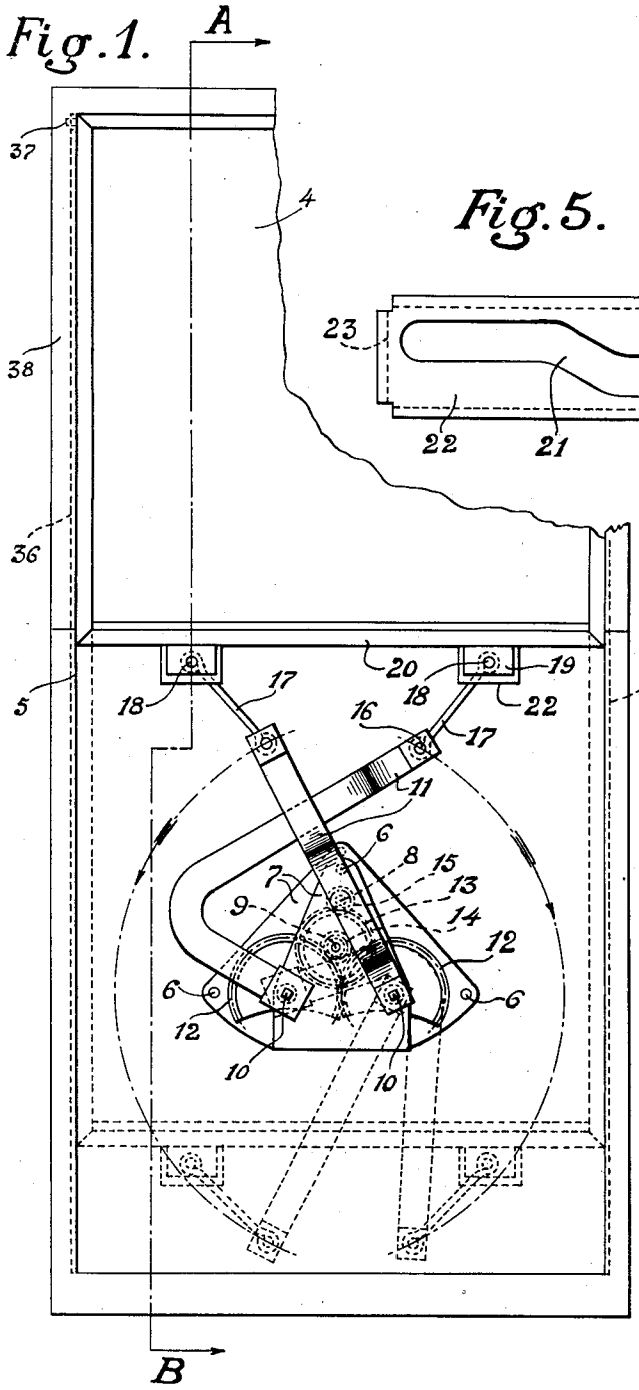


Fig. 5.




Fig. 2.

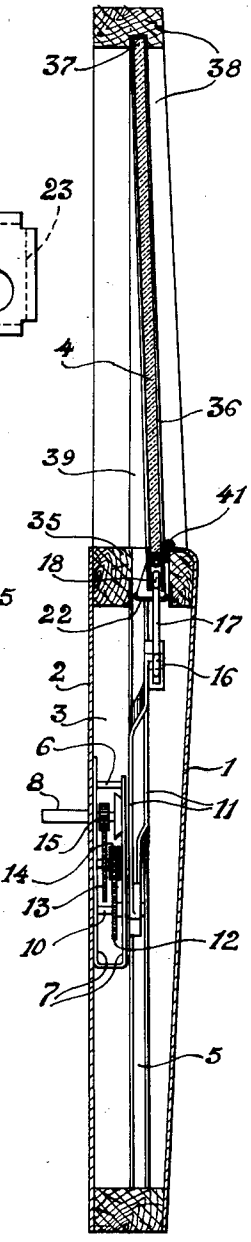


Inventor
Jacques Egide Serste
By
Attorneys

July 9, 1929. J. E. SERSTÉ 1,720,063

WINDOW OPERATING APPARATUS

Filed Aug. 10, 1927 2 Sheets-Sheet 2

Fig. 3.

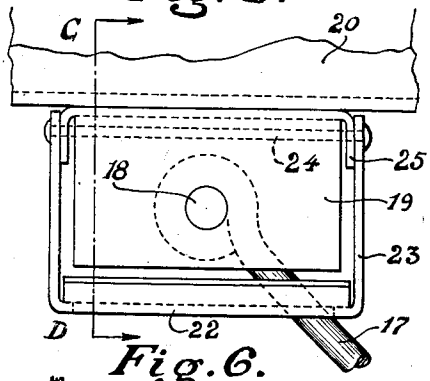


Fig. 4.

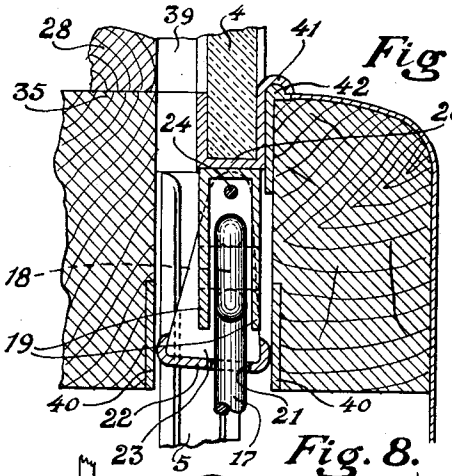


Fig. 6.

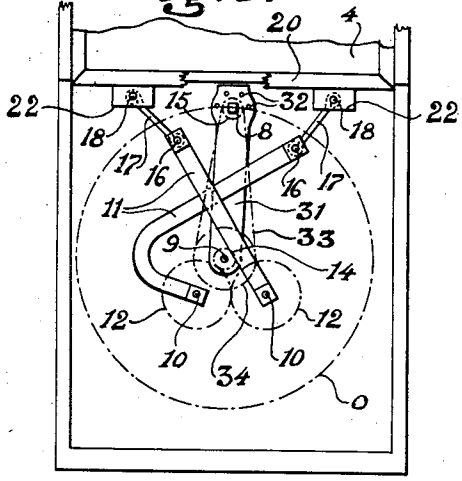


Fig. 8.

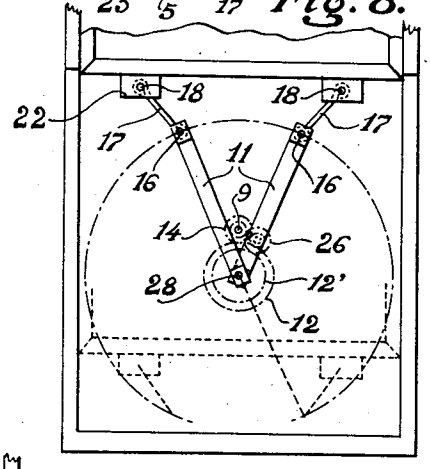


Fig. 7.

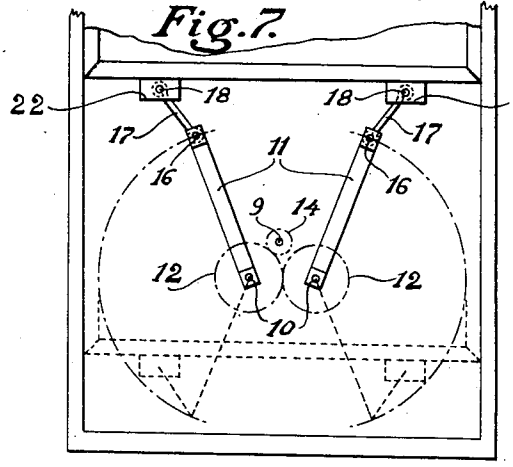


Fig. 9.

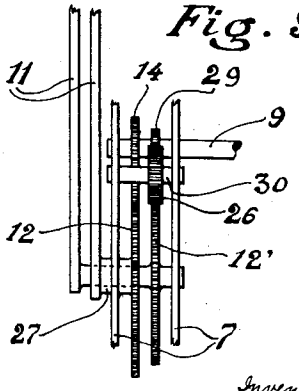


Inventor
Jacques Egide Serstè
By
Attorney

Patented July 9, 1929. 1,720,063

# UNITED STATES PATENT OFFICE.

JACQUES EGIDE SERSTÉ, OF BRUSSELS, BELGIUM.

## WINDOW-OPERATING APPARATUS.

Application filed August 10, 1927, Serial No. 212,010, and in Belgium August 26, 1926.

This invention relates to window operating apparatus and it has more particularly reference to apparatus comprising a toggle adapted to impart to the window the vertical and lateral movements necessary for clearing the weather rail. It is an object of my invention to provide an apparatus of this kind which will be simple and strong and will not give rise to vibrations when used in motor cars.

The apparatus according to the present invention comprises one or preferably two toggles having each an arm pivoted to the window sash and guided in a slotted member which is also pivoted to the sash and adapted to engage stationary guides at the top of its travel. Owing to this double guiding action, the lateral movement required for bringing the sash over the sill takes place while the toggles pass through and beyond their dead center.

The toggles are conveniently operated in a known manner by means of a handle or crank and the apparatus is mounted bodily in a frame so that it can easily be fitted in the groove or case in which the window sash is to be accommodated.

The arrangement of the toggles and of their operating means may be varied according to requirements as shown in the accompanying drawings illustrating by way of example various embodiments of my invention in its application to vehicle windows.

Fig. 1 is a front elevation of the apparatus mounted in a carriage door.

Fig. 2 is a vertical cross-section on line A—B of Fig. 1.

Fig. 3 shows on a larger scale one of the slotted guiding members pivoted to the window sash. Fig. 4 is a vertical cross-section on line C—D of Fig. 3 and Fig. 5 is a bottom view of a guiding member.

Figs. 6, 7 and 8 are diagrammatic elevations showing modified forms of the apparatus and Fig. 9 is a side view, on a larger scale, of the gears shown in Fig. 8.

In the drawing 1 and 2 respectively denote the outer and inner walls of a carriage door in which is provided a space 3 (Fig. 2) for accommodating the window 4 which is guided between vertical or inclined grooved guides 5. To the inner wall 2 is secured by means of rivets 6 or otherwise, a frame or casing 7 carrying all the parts of the mechanism. In this frame are mounted a shaft 8 having a projecting end adapted to receive a handle or crank (not shown), an intermediate shaft 9, and two shafts 10 on each of which are rigidly secured a lever 11 and a toothed wheel or sector 12. On the shaft 9 are mounted two gears 13, 14 respectively in mesh with a pinion 15 on the shaft 8 and with one of the sectors 12. The two sectors 12 mesh with each other, so that they are rotated in opposite directions.

Pivoted to the levers 11 at 16 are links 17 forming toggles therewith and pivoted in turn at 18 to lugs 19 secured to the window sash 20 (Figs. 3 and 4). The links 17 are guided between these lugs and they moreover are engaged in slots 21 provided in yoke-shaped guiding members 22 having their shanks 23 pivoted on pins 24 supported in bearings 25 secured to the sash 20. The slots 21 comprise two straight portions connected by a curved portion as shown in Fig. 5.

When sufficient room is available in the direction of the width of the window to enable the toggle arms to swing freely, the levers 11 may be straight bars arranged as shown in Fig. 7. If on the other hand a confined space only is available, the levers 11 are mounted crosswise and one at least of them is curved as shown in Figs. 1 and 2 so that they can swing freely in parallel planes.

Another convenient arrangement illustrated in Fig. 8, consists in mounting the levers 11 coaxially like the hands of a clock. As these levers have to swing together through equal angles but in opposite directions, the toothed wheels or sectors 12, 12′ respectively controlling them are rotated by the shaft 9, one directly and the other through an auxiliary pinion 26. As shown in Fig. 9 one of the levers 11 is mounted on a tubular shaft 27 and the other on a central shaft 28. On shaft 27 is mounted the gear 12 meshing with the pinion 14 on shaft 9, while shaft 28 carries the gear 12′ meshing with the auxiliary pinion 26 which is rotated by a pinion 29 on shaft 9. Like the other parts of the mechanism the shaft 30 carrying the auxiliary pinion is supported in the frame 7.

Instead of directly receiving its motion from the crank shaft 8, the shaft 9 may of course be rotated by any convenient means. In Fig. 6 I have illustrated a construction which makes it possible to locate the crank shaft in any convenient position. The shaft 8 here is mounted at the end of an arm 31 pivotally supported on the shaft 9 so that

when the apparatus is being fitted in a motor car body, one can select on the circumference the most suitable place for the shaft 8. The arm 31 is then secured to the door (or other part of the car body as the case may be) by means of screws 32 for example. A chain 33 is engaged by the pinion 15 on the shaft 8 and rotates the shaft 9 by means of a reducing gear 34. The length of the arm 31 may of course be varied according to requirements, and the chain may be replaced by other suitable motion transmitting means.

Above the window sill 35 (Fig. 2) the guides 5 are extended by grooved guides 36 pivoted near the top, at 37, to the outer frame 38 of the window. The guides 36 are housed in downwardly flaring grooves 39 so that these guides together with the window sash are adapted to swing on the pivots 37 when the sash is fully raised.

In Figs. 1, 7 and 8 I have shown in dotted lines the lower edge of the sash in its lowermost position. When the shaft 8 is rotated the toggle arms 11, 17 raise the window until the pivots 10, 16, 18 of each toggle are in alignment (dead centre) whereupon the window starts to drop. But before it reaches the dead centre position the guiding members 22 are engaged between the walls 40 of the groove in the window sill 35 (Fig. 4) which is just wide enough to accommodate the members 22, so that they are prevented from moving laterally. The arms 17 continuing their motion then ride through the curved portions of the slots 21 and are compelled to move laterally, the levers 11 allowing a slight lateral motion by reason of their elasticity. The lugs 19 on the sash 20 must follow this movement, and the window then fully engaged between the guides 36 is thus caused to swing on the pivots 37 so that a slight drop beyond the dead centre position brings the forwardly projecting edge 41 of the sash on the weather rail 42 as shown in Fig. 4. The movements just described will of course take place in reverse succession and direction when the shaft 8 is rotated in the opposite direction.

The apparatus according to the invention may be provided with a suitable brake for locking the window sash in any desired position.

The apparatus may of course comprise only a single toggle 11, 17 instead of two, the pivot 18 of this toggle then being located centrally of the window sash. Other modifications may of course be made in the construction herein illustrated without departing from the scope of the invention. Furthermore, I wish it to be understood that although I have described and illustrated my improved window operating apparatus only in its application to vehicle windows, it may, with equal facility and advantage be applied to sliding windows in any other situation, as, for instance to the windows of buildings of all kinds or other structures.

I claim:

1. In a window operating mechanism, the combination with a window sash, of a shaft, a toggle having one arm pivoted on said shaft and another arm pivoted to said sash, a slotted member pivoted to said sash, a pair of guiding plates secured to said sash, the second mentioned arm of said toggle being guided both in said slotted member and between said plates, and stationary guides engaging said slotted member at the top of its travel.

2. In a window operating mechanism, the combination with a window sash, of two toggles having each an arm pivoted to said sash, two slotted members located beneath said sash and pivotally connected therewith, the slots in said members comprising two straight portions and therebetween a curved portion, said toggle arms being guided each in one of said slots, and stationary guides for said slotted members.

3. In a window operating mechanism, the combination with a window sash, of a toggle having an arm pivoted to said sash, a pair of lugs secured to said sash and engaging said toggle arm, a pivoted guide depending from said sash and also engaging said toggle arm, a stationary guide adapted to engage said pivoted guide when the sash is nearing its topmost position, and means for operating said toggle.

4. In a window operating mechanism, the combination with a window sash, of a pair of toggles having each an arm pivoted to said sash, a pair of slotted members depending from said sash and pivotally connected therewith, said members engaging said toggle arms and being adapted to cause same to move laterally, stationary guides adapted to co-operate with said slotted members to constrain said toggle arms to move laterally, and means on said sash engaging said toggle arms to cause said sash to partake in their lateral movements.

5. In a window operating mechanism, the combination with a window sash, of a pair of toggles having each an arm pivoted to said sash, a pair of yoke-shaped guides for said toggle arms depending from said sash and pivotally connected therewith, lugs on said sash engaging said toggle arms and located within said yoke-shaped guides, and stationary guides adapted to co-operate with said yoke-shaped guides.

6. In a window operating mechanism, the combination with a window sash, of a pivot on said sash, another pivot on said sash extending to right angles to the first pivot, a toggle arm pivoted on one of said pivots, a guide for said toggle arm pivoted on the other pivot, a pair of lugs rigid with said sash, said toggle arm being engaged between

said lugs, and a stationary guide adapted to cooperate with said pivoted guide.

7. The combination, with a wall having a groove therein, of a window sash adapted to be lowered into said groove, a pair of toggles having each an arm pivoted to said sash, a pair of slotted members pivoted to said sash, two pairs of guiding plates secured to said sash, the toggle arms pivoted to the sash being each engaged in one of said slotted members and between one of said pairs of plates, and stationary guides at the top of said groove adapted to engage said slotted members.

8. The combination, with a wall having a groove therein, of a window sash adapted to be lowered into said groove, a frame adapted to be secured within said groove, a pair of toggles supported in said frame, said toggles having each an arm pivoted to said sash, a pair of slotted members pivoted to said sash and engaging each one of said toggle arms, guides for said slotted members secured to said wall at the top of said groove, an arm pivotally mounted in said frame, an operating shaft mounted in said arm, and driving connections between said shaft and said toggles.

JACQUES EGIDE SERSTÉ.