J. V. RUND.

AUTOMATIC SAFETY STOP FOR TRAINS.

APPLICATION FILED MAR. 7, 1913.

**1,119,881.**

Patented Dec. 8, 1914.

2 SHEETS—SHEET 1.

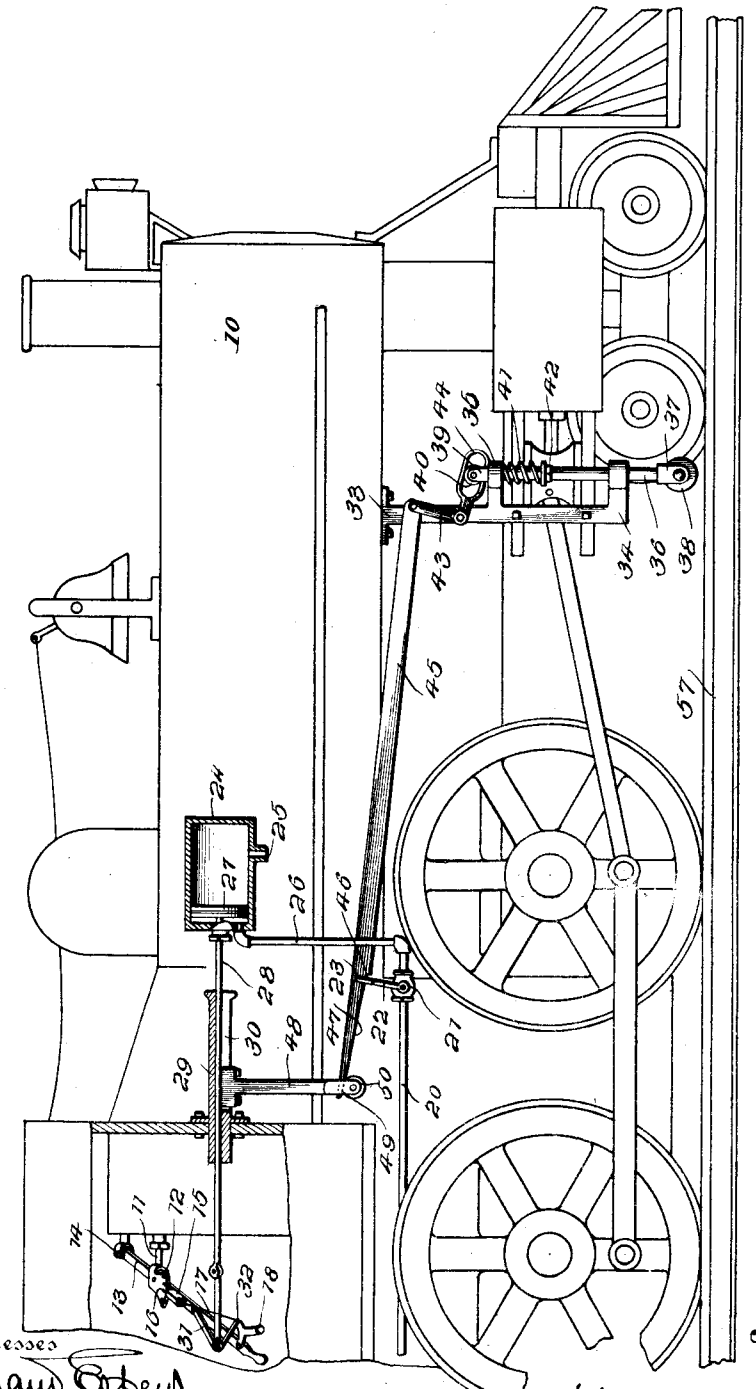


Fig. 1.

Witnesses

Inventor

J. V. Rund

By

Attorneys.

J. V. RUND.

AUTOMATIC SAFETY STOP FOR TRAINS.

APPLICATION FILED MAR. 7, 1913.

1,119,881.

Patented Dec. 8, 1914.

2 SHEETS—SHEET 2.

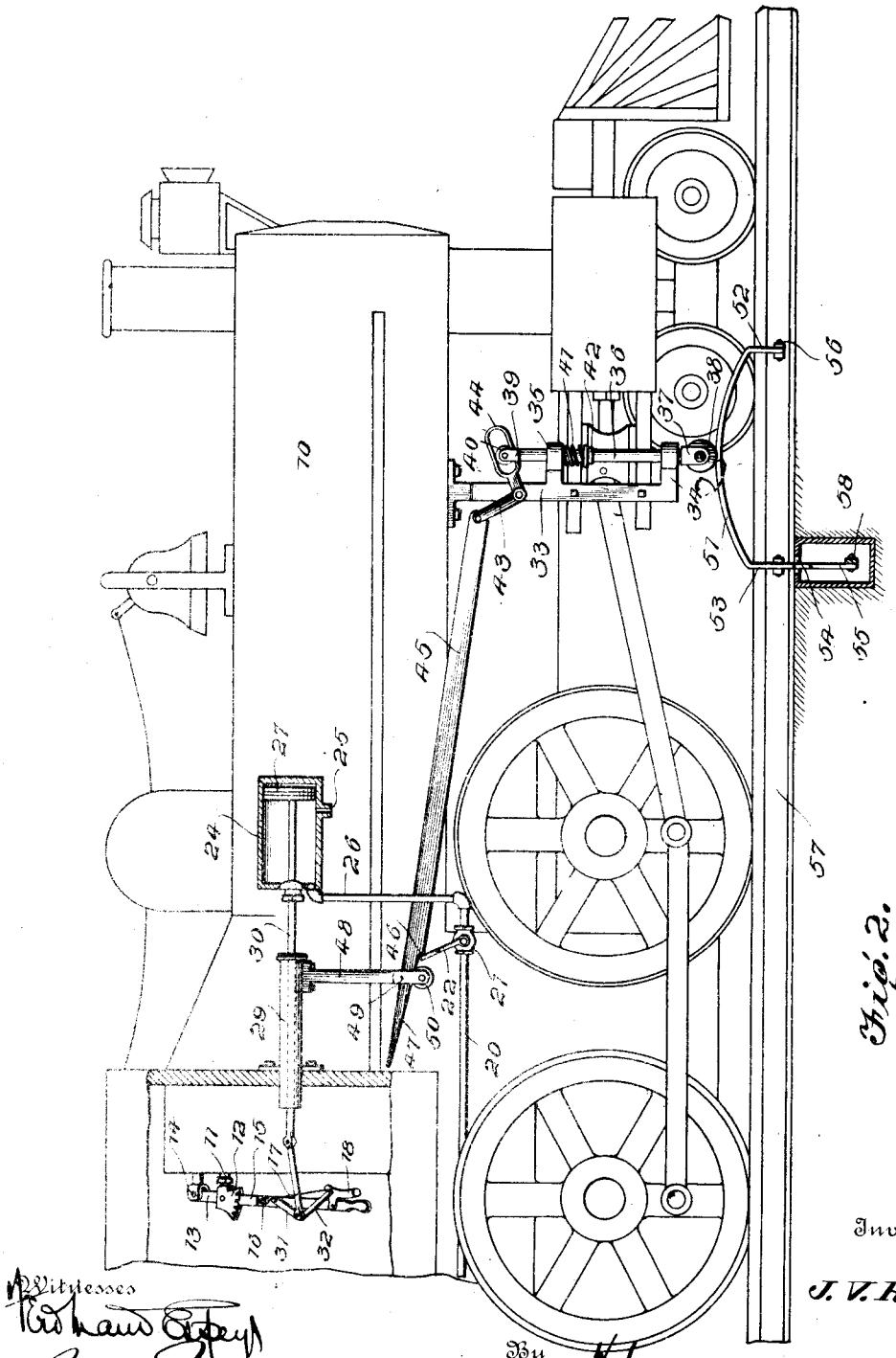


Fig. 2.

Witnesses

Inventor

J. V. Rund

By

Attorneys.

# UNITED STATES PATENT OFFICE.

JOHN V. RUND, OF PESOTUM, ILLINOIS.

## AUTOMATIC SAFETY-STOP FOR TRAINS

1,119,881. Specification of Letters Patent. Patented Dec. 8, 1914.

Application filed March 7, 1913. Serial No. 752,724.

*To all whom it may concern:*

Be it known that I, JOHN V. RUND, citizen of the United States, residing at Pesotum, in the county of Champaign and State of Illinois, have invented certain new and useful Improvements in Automatic Safety-Stops for Trains, of which the following is a specification.

My present invention relates to new and useful improvements in safety appliances for railways and more particularly to that class of safety appliances which are intended to prevent an engineer running his train past a danger signal, this invention being an improvement over the safety appliance disclosed in my copending application filed January 31, 1913 and bearing Serial No. 745,471.

The above referred to application discloses a trip device positioned adjacent the track and movable into and out of operative position to engage certain plungers carried by the locomotive in such a manner as to successively apply the air brakes of the train and close the throttle valve.

The principal object of my present invention is to provide means operable by but one plunger in connection with the trip which will successively close the throttle valve and then apply the air brakes of the train.

A still further object of my invention is to so arrange the mechanism that the air pressure in the air line of the train is utilized as the means for closing the throttle valve, and further so arranged that the closing of the throttle valve automatically operates to vent the air line and apply the brakes.

A still further object of my invention is to so arrange the mechanism that a manual closing of the throttle valve before the engine reaches the trip will render the action of the trip upon the plunger ineffective. Because of this the engineer, if he sees the danger signal, may close the throttle valve and then gradually apply the air brakes as he sees fit to bring the train to a gradual stop whereas if the brakes were applied by mechanical means the stopping of the train would be sudden.

With these and other objects in view, my invention will be more fully described, illustrated in the accompanying drawings, and then specifically pointed out in the claims which are attached to and form a part of this application.

In the drawings: Figure 1 is a fragmentary elevational view of a conventional form of locomotive showing my improved appliance in normal position, the throttle valve lever being somewhat enlarged to more clearly show its construction and operation; Fig. 2 is a view similar to Fig. 1, but showing the manner in which the throttle valve is closed and the brakes applied by the engagement of the plunger by the trip.

Corresponding and like parts are referred to in the following description and indicated in all the views of the drawings by the same reference characters.

To insure a clear understanding of my invention I have illustrated the same as applied to a conventional form of locomotive 10 having a throttle valve stem 11 provided at one end with a laterally offset sector rack 12 and operable by a throttle lever 13 pivotally connected intermediate its length to the free end of the valve stem and by one end to a bracket 14. This throttle lever carries a housing 15 for the usual latch bolt 16 which is normally held in engagement with the sector rack by a spring, not shown, and which may be manually swung from said engagement by a connecting rod 17, the free end of which is secured to a pivoted hand latch 18 of the lever. The above described mechanism is of conventional type and its operation will be readily understood.

One end of the air line of the air brake system is extended beneath the locomotive as shown at 20 and provided with a normally closed valve 21 of the turn plug type, the operating lever 22 of which, under ordinary conditions, extends vertically and terminates in a pair of spaced arms 23.

Mounted at any suitable point upon the locomotive but in alinement with the intermediate portion of the throttle lever 13, is a cylinder 24 closed at its ends and provided intermediate its length with an outlet port 25. A pipe 26 leads from the outlet port of the valve 21 to that end of the cylinder adjacent the throttle lever of the locomotive. A piston 27 carried by a piston rod 28 is mounted for reciprocatory movement in the cylinder and is so proportioned that when moved to the farther end of the cylinder communication is established between the pipe 26 and the outlet port 25 of the cylinder through the cylinder. The piston rod 28 is mounted for reciprocation through a sleeve 29 provided in its lower face with a longitudinally extending slot 30, the purpose of which will be hereinafter explained and is connected at its free end with the p

otally connected ends of links 31 and 32, the free end of the former link being pivoted to the intermediate portion of the throttle lever 13, while the free end of the latter link is pivoted in like manner to the hand latch 18.

From the foregoing description, it will be apparent that the throttle lever may be swung forwardly in the usual manner to close the throttle valve and that during this movement of the throttle member, the piston will be advanced to the forward end of the cylinder. This, however, will have no effect on the air brakes unless the valve 21 is opened and the manual operation of the throttle valve is therefore the same as usual. Upon the other hand, if the valve 21 is opened by proper swinging of the valve lever 22, air will pass through the train air line 20, valve 21 and pipe 26 to the cylinder 24 and this air will force the piston 27 to the forward end of the cylinder. This movement of the piston will automatically close the throttle valve and when the piston has reached the forward end of the cylinder and the throttle valve is completely closed, the air entering the cylinder at the rear of the piston will escape through the outlet port 25 of the cylinder and this escape of the air, venting the train line, will apply the air brakes to stop the train.

One of the principal objects of my invention therefore is to provide means which may be readily operated by a trip positioned along the track for opening the valve 21, while a further object is to so arrange this valve operating means that a manual closing of the throttle valve will render said means inoperative as regards the valve 21. To accomplish this I have provided a downwardly depending bracket 33 which may be secured to the jacketing of the boiler or other suitable portion of the locomotive and which is provided intermediate its length and at its lower end with forwardly directed arms 34 providing alined bearings 35 which carry a plunger shaft 36. The lower end of this shaft 36 terminates in a fork 37 in which is journaled a roller 38, while the upper end of the plunger also terminates in a fork 39 between the prongs of which is journaled a roller 40. The plunger is normally held in lowermost position through the action of a helical spring 41 which surrounds the plunger bearing between the lower face of the upper arm 34 and a collar 42 securely mounted upon the plunger.

A pivoted bell crank lever 43 is provided at one end with a slotted arm 44 in which the roller 40 seats, the fork arms or prongs extending one upon either side of said lever arm. An operating rod 45 is pivotally connected by one end to the free end of the opposite arm of this lever 43 and is cut-away adjacent its opposite end to form a shoulder 46 and to provide an upwardly inclined lower face 47. This operating rod is so proportioned that in normal position of the plunger and lever 43, the rod seats between the spaced arms 23 of the valve lever 22 with its shoulder 46 bearing against the forward face of said lever.

The piston rod 28 carries a downwardly depending arm 48 which extends through the slot 30 and which terminates in spaced arms 49 between which the free end of the operating rod 45 extends. A roller 50 journaled between these arms forms a support for the free end of the operating rod, as clearly shown in the drawings.

As will be readily understood from the foregoing description any upward movement of the plunger 36 will act through the bell crank lever to move the operating rod rearwardly and, because of the engagement of the rod's shoulder 46 against the valve lever, to open the valve 21 and so close the throttle valve and apply the air brakes in the manner previously described. If, on the other hand, the throttle lever has been previously closed by hand, it will have advanced the arm 48 to raise the rod 45 and disengage the same from the valve lever. Because of this, any upward movement of the plunger transmitted through the bell crank lever to the operating rod will then be ineffective and the brakes will not be applied.

It will of course be understood that I do not wish to limit myself to any specific form of trip for operating this safety appliance but for the sake of clearness I have illustrated, in Fig. 2, one form which has been found successful. This trip includes a longitudinally bowed body member 51 having downwardly depending parallel end portions 52 and 53, the latter of which is provided with a lateral extension 54 terminating in a lever arm 55. The end portions 52 and 53 are provided with alined bores by means of which they may be pivotally mounted between the ears of brackets 56 carried by the track rails 57. Any suitable means such as a connecting rod 58, and an operating lever, not shown, may be employed to swing the trip member 51 from horizontal to vertical position to bring it into alinement with the plunger 36 of the train. As this trip mechanism however, forms no part of my present invention, any further description of the same is unnecessary.

From the foregoing description, it will be apparent that I have provided an automatic safety appliance by means of which the throttle valve may be closed and the air brakes applied automatically upon running by a danger signal. It will of course be understood that I do not wish in any way

to limit myself to the specific details of construction above described and illustrated in the drawings as minor changes in construction, within the scope of the appended claims, may at any time be made, without in the slightest degree departing from the spirit of my invention.

Having thus described the invention, what is claimed as new is:

1. The combination with a locomotive having a throttle valve and an air line including a valve, of means operable to open the air line valve, means adjacent the track for actuating said first means, means operable by the manual closing of the throttle valve for rendering said first means inoperative, means operable by the opening of the air line valve for closing the throttle valve automatically, and means operable by the automatic closing of the throttle valve when the air line valve is opened for venting the air line.

2. The combination with a locomotive having a throttle lever and an air brake line including an air valve, of a cylinder closed at its ends and provided intermediate its length with an outlet port, a pipe communicating with the air valve and leading into the rear end of the cylinder, a piston in the cylinder, a piston rod operatively connecting the piston and throttle valve lever, a downwardly depending arm carried by the piston rod, a plunger mounted for reciprocation in advance of the air valve, a lever operatively connected to the plunger, an operating rod pivoted by one end to the lever and operatively engaging the air valve, and a cam faced terminal formed on the free end of said operating rod and bearing upon the arm carried by the piston rod, said operating rod and arm being so proportioned that the closing of the throttle valve will raise the operating rod out of engagement with the air valve.

3. The combination with a locomotive having a throttle valve and an air brake line including an air valve, of means operable by the opening of the air valve for successively closing the throttle valve and venting the air brake line, a sliding operating rod having an inclined end providing a shoulder for engagement with the air valve to operate the same, means actuatable from the track for operating said rod and means operable by closing of the throttle valve for moving said rod out of engagement with the air valve.

4. The combination with a locomotive having a throttle valve and an air brake line including an air valve, of means operable by the opening of the air valve for successively closing the throttle valve and venting the air brake line, a sliding operating rod having an inclined end providing a shoulder for engagement with the air valve to operate the same, means actuatable from the track for operating said rod and means operable by closing of the throttle valve for moving said rod out of engagement with the air valve, said means including a throttle valve lever, a reciprocating rod carried by the valve lever, and a hanger arm carried by said rod and supporting the free end of the reciprocating operating rod.

5. The combination with a locomotive having a throttle lever and an air brake line including an air valve, of a cylinder closed at its ends and provided intermediate its length with an outlet port, a pipe communicating with the air valve and leading into one end of the cylinder, a piston in the cylinder, a pawl carried by the throttle lever for locking the same in various positions, a hand latch operatively connected to the pawl to release the same, a toggle mechanism between the pawl and hand latch for releasing the pawl, a piston rod connected to the piston and operatively engaging the toggle mechanism, a downwardly depending arm carried by the piston rod, and means supported by said arm operable to open and close the air valve, said valve closing means being movable into and out of engagement with the air valve by reciprocation of the piston rod.

6. The combination with a locomotive having a throttle valve lever and an air valve, of a rod actuatable from the track operatively engaging the air valve, means including a reciprocating piston rod operatively connected to the throttle lever for closing the throttle lever after opening of the air valve, and means carried by said piston rod adapted upon manual movement of the throttle lever to move the first rod out of engagement with the air valve.

7. The combination with a locomotive having a throttle valve lever and an air valve, of a rod actuatable from the track operatively engaging the air valve, means including a reciprocating piston rod operatively connected to the throttle lever for closing the throttle lever after opening of the air valve, and means carried by said piston rod adapted upon manual movement of the throttle lever to move the first rod out of engagement with the air valve, said means including an arm carried by the piston rod, and a roller carried by the arm and extending into engagement with the first rod.

In testimony whereof I affix my signature in presence of two witnesses.

JOHN V. RUND. [L.S.]

Witnesses:

F. J. KAPPES,

JOSEPH KAPPES.