A. TURNER.

TURRET DRILLING MACHINE.

APPLICATION FILED JUNE 25, 1912.

1,177,741.

Patented Apr. 4, 1916.

6 SHEETS—SHEET 1.

Fig. 1.

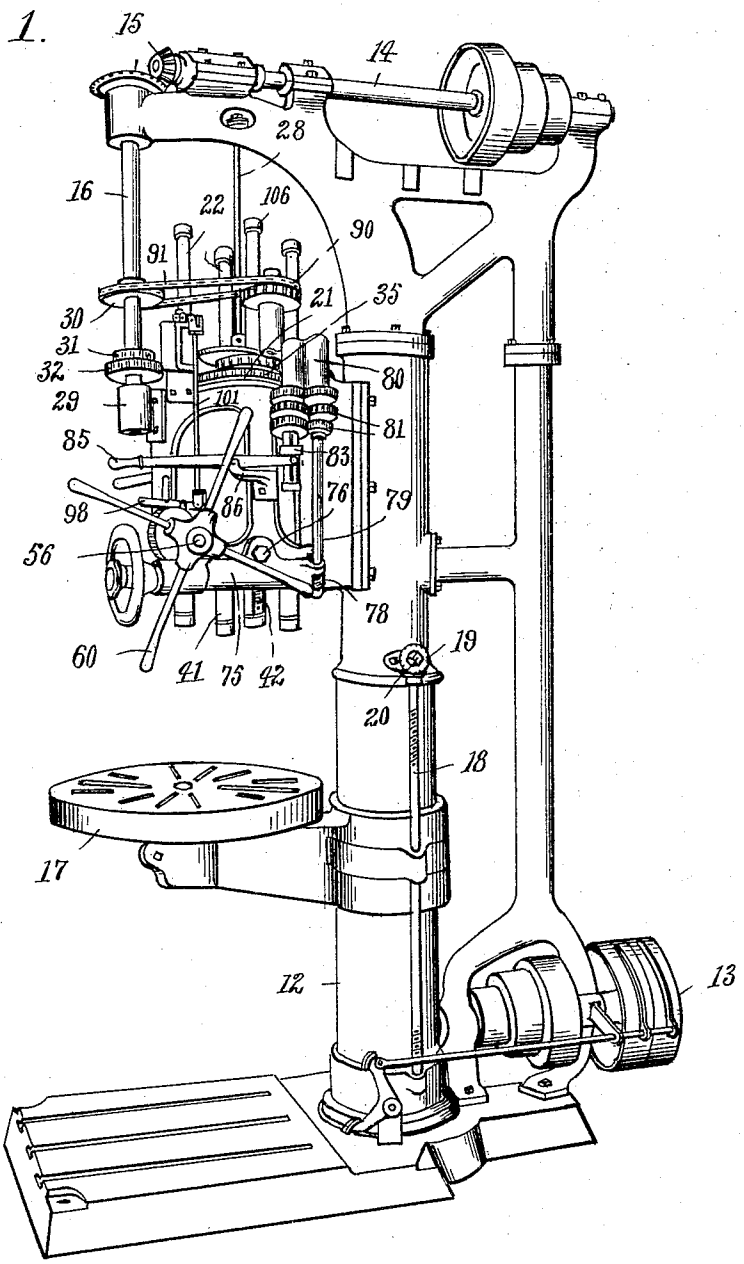

WITNESSES:

Ivan L. Morehouse

Ruth M. Worden

INVENTOR

Arnold Turner

BY

Chamberlain & Newman

ATTORNEYS

THE COLUMBIA PLANOGRAPH CO., WASHINGTON, D. C.

A. TURNER.

TURRET DRILLING MACHINE.

APPLICATION FILED JUNE 25, 1912.

1,177,741.

Patented Apr. 4, 1916.

6 SHEETS—SHEET 2.

Fig. 2.

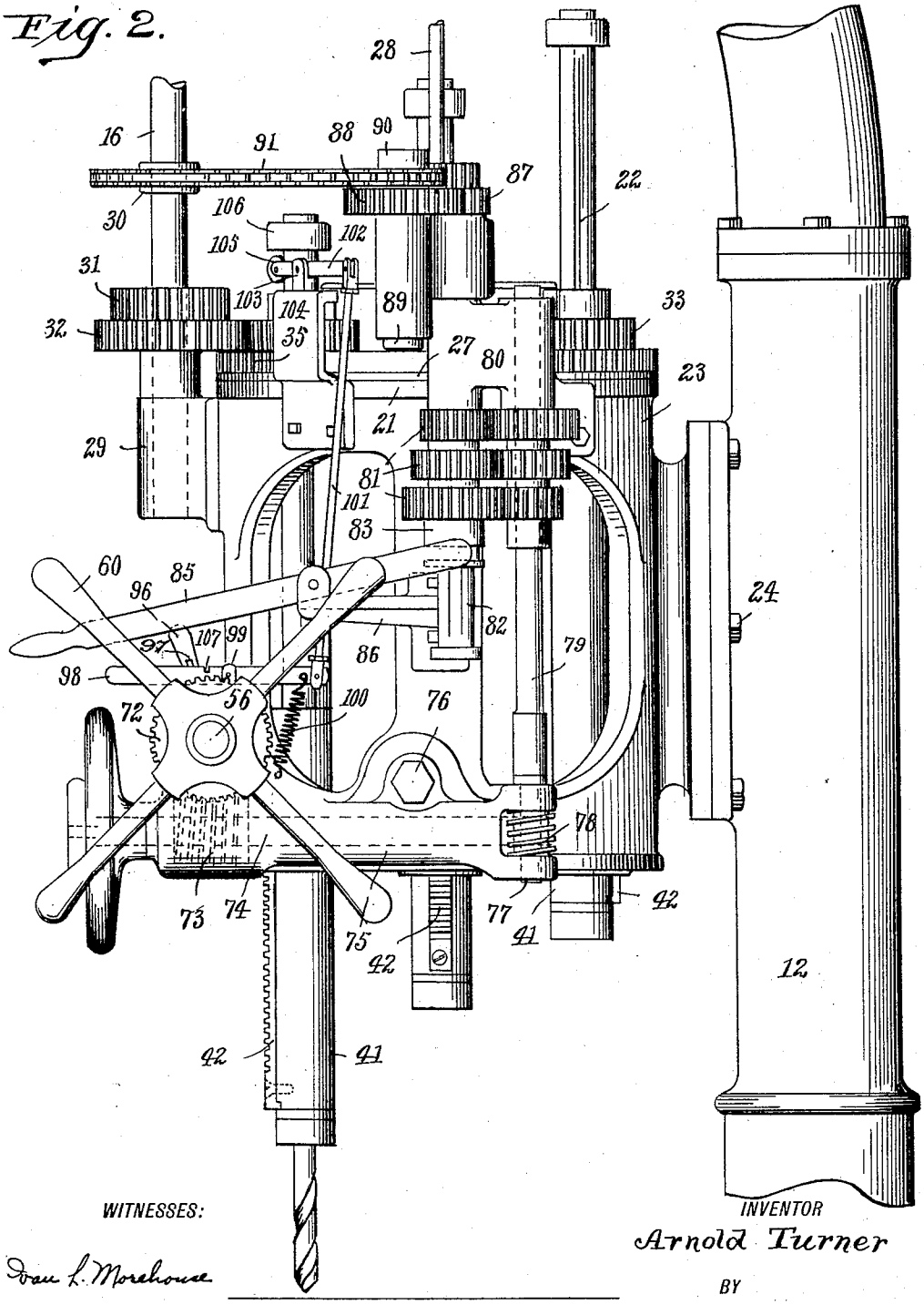

WITNESSES:

Dan L. Morehouse

Ruth M. Holden

INVENTOR

Arnold Turner

BY

Chamberlain & Newman

ATTORNEYS

A. TURNER.

TURRET DRILLING MACHINE.

APPLICATION FILED JUNE 25, 1912.

1,177,741.

Patented Apr. 4, 1916.

6 SHEETS—SHEET 3.

Fig. 3.

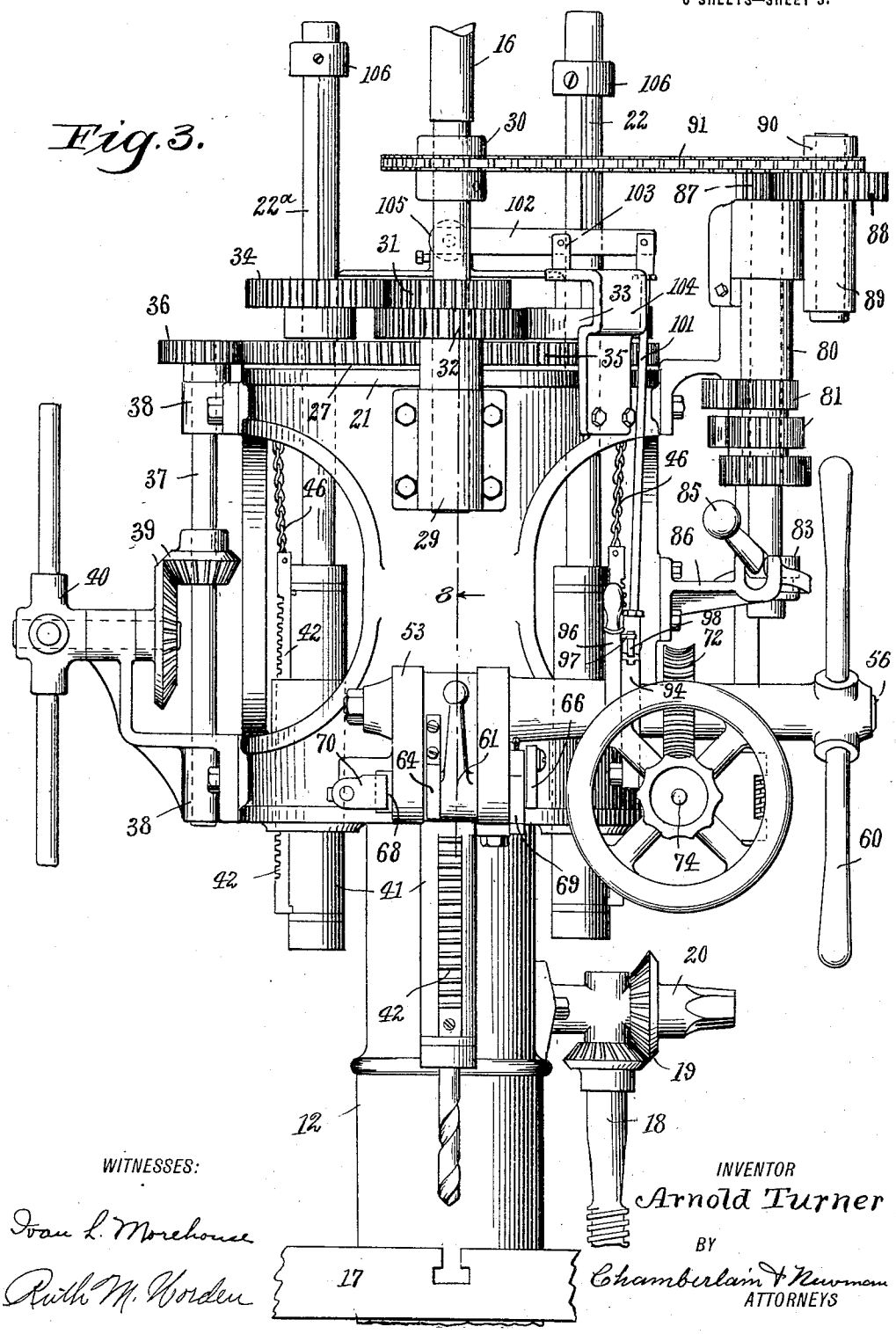

WITNESSES:

Ivan L. Morehouse

Ruth M. Worden

INVENTOR

Arnold Turner

BY

Chamberlain & Newman

ATTORNEYS

THE COLUMBIA PLANOGRAPH CO., WASHINGTON, D. C.

A. TURNER.

TURRET DRILLING MACHINE.

APPLICATION FILED JUNE 25, 1912.

1,177,741.

Patented Apr. 4, 1916.

6 SHEETS—SHEET 4.

Fig. 4.

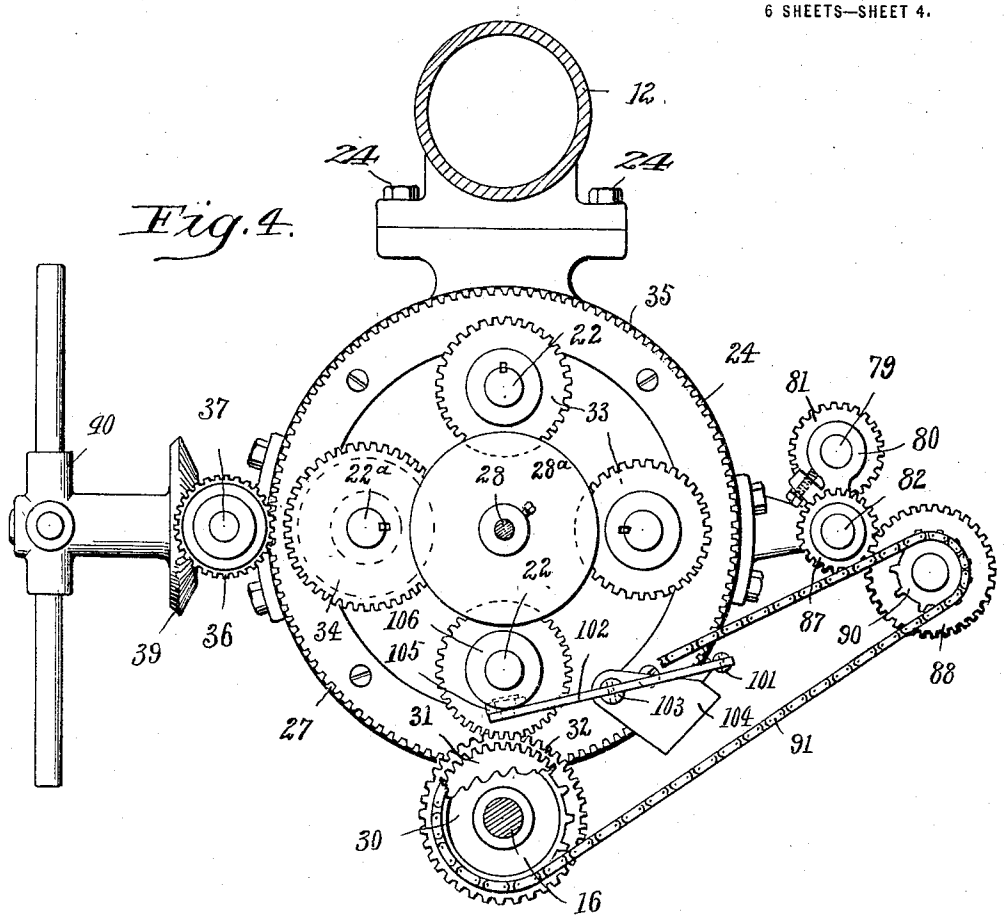

Fig. 5.

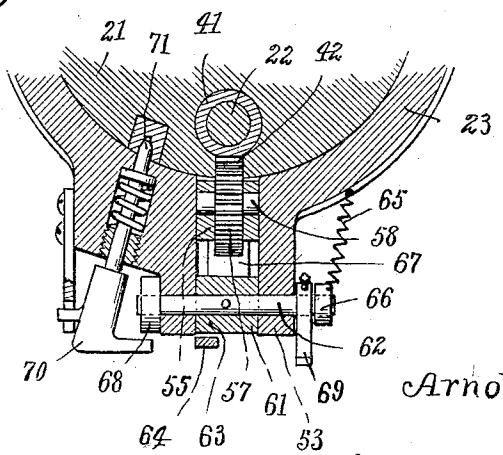

WITNESSES:

Joan L. Morehouse

Ruth M. Worden

INVENTOR

Arnold Turner

BY

Chamberlain & Newman

ATTORNEYS

THE COLUMBIA PLANOGRAPH CO., WASHINGTON, D. C.

A. TURNER.

TURRET DRILLING MACHINE.

APPLICATION FILED JUNE 25, 1912.

1,177,741.

Patented Apr. 4, 1916.

6 SHEETS—SHEET 5.

Fig. 6.

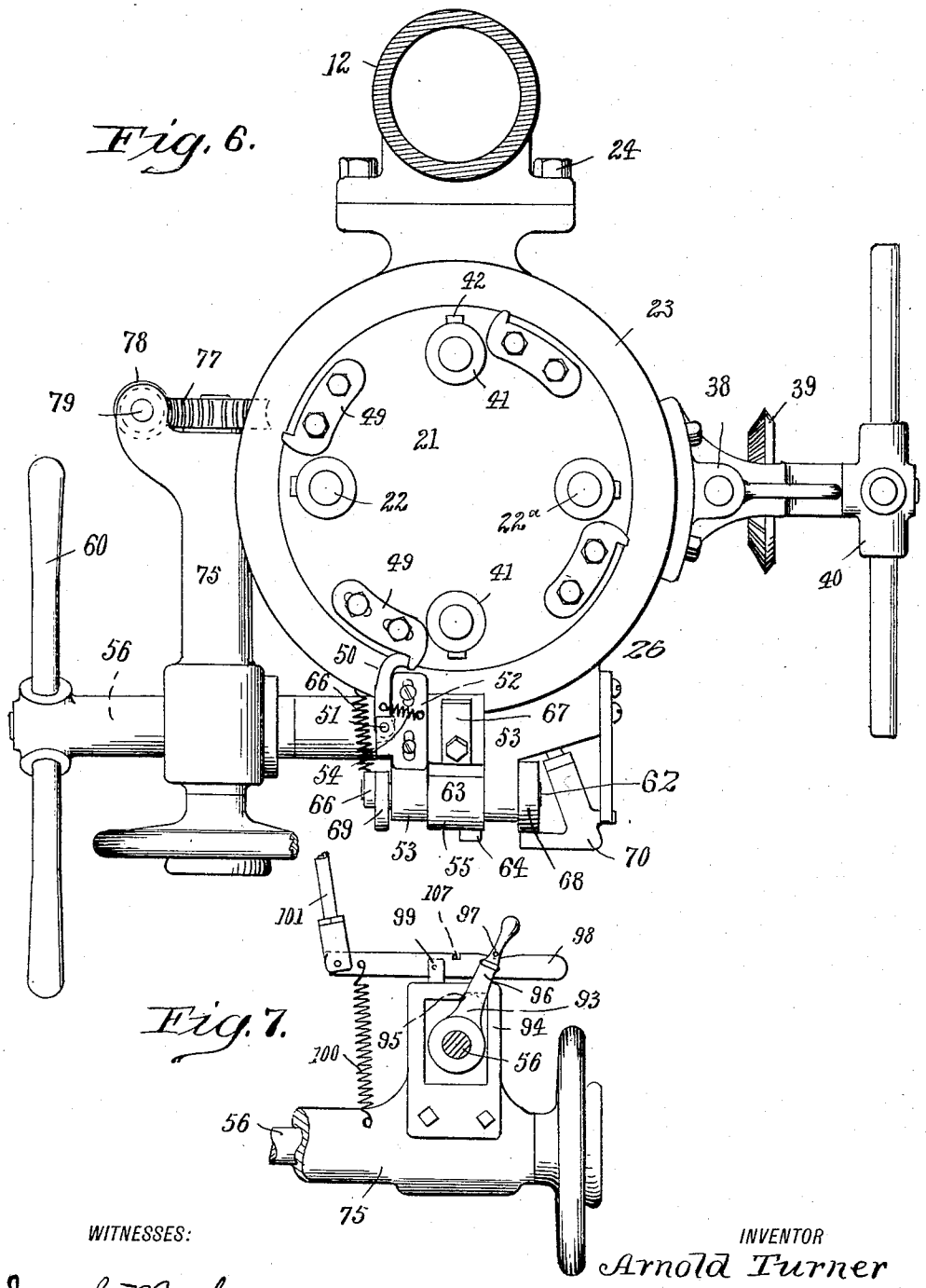

Fig. 7.

WITNESSES:

Ivan L. Morehouse

Ruth M. Holden

INVENTOR

Arnold Turner

BY

Chamberlain & Newman

ATTORNEYS

THE COLUMBIA PLANOGRAPH CO., WASHINGTON, D. C

A. TURNER.

TURRET DRILLING MACHINE.

APPLICATION FILED JUNE 25, 1912.

1,177,741.

Patented Apr. 4, 1916.

6 SHEETS—SHEET 6.

Fig. 10.

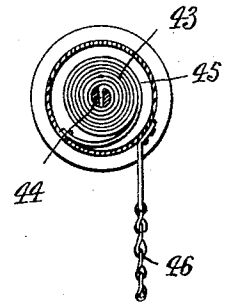

Fig. 8.

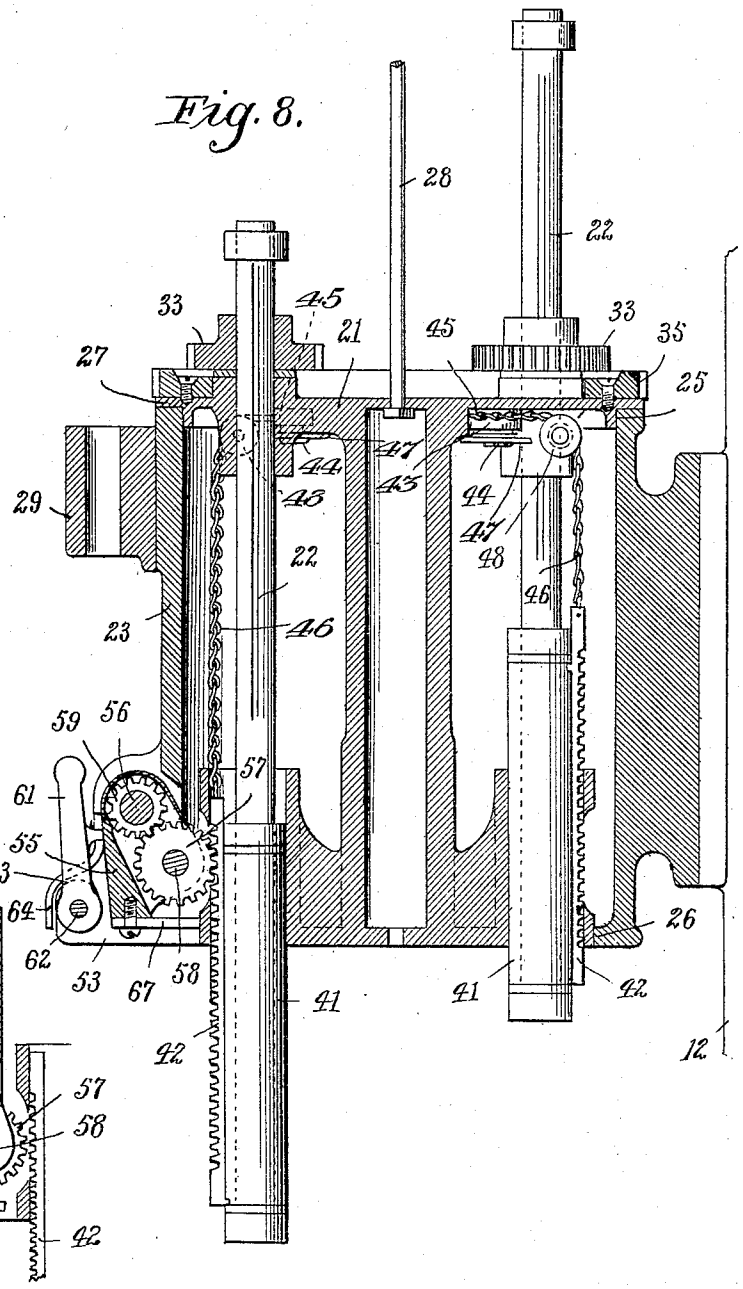

Fig. 9.

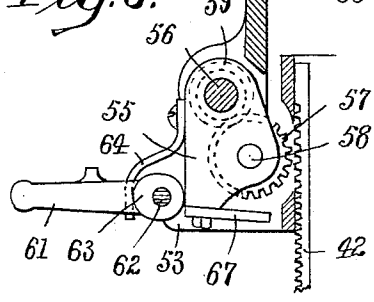

WITNESSES:

Joan L. Morehouse

Ruth M. Worden

INVENTOR

Arnold Turner

BY

Chamberlain & Newman

ATTORNEYS

THE COLUMBIA PLANOGRAPH CO., WASHINGTON, D. C.

UNITED STATES PATENT OFFICE.

ARNOLD TURNER, OF DANBURY, CONNECTICUT.

TURRET DRILLING-MACHINE.

1,177,741. Specification of Letters Patent. Patented Apr. 4, 1916.

Application filed June 25, 1912. Serial No. 705,718.

To all whom it may concern:

Be it known that I, ARNOLD TURNER, citizen of the United States, and resident of Danbury, in the county of Fairfield and State of Connecticut, have invented certain new and useful Improvements in Turret Drilling-Machines, of which the following is a specification.

This invention relates to drilling-machines of the class shown and described in patent issued to Baker No. 698,242, and since assigned to me.

The invention therefore refers to improvements in drilling-machines employing a rotary turret head and including a series of rotatable spindles adapted to carry various forms of drills, reamers, taps and other forms of tools which may be respectively brought into operative position.

The purpose of the invention is to provide an improved form of counterweighting device for the several spindles of the turret; to provide operative means for rotating the turret head; to provide an improved form of interlocking device whereby the said spindles may be operatively engaged and fed downward when they are brought around into operative position, and further to provide an automatic power feed for feeding the said spindles downward, while being rotated.

With these and other objects in view the invention further resides and consists in the construction and novel combination and arrangement of parts hereinafter more fully described, illustrated in the accompanying drawings, and pointed out in the claims hereto appended, it being understood that various changes in the form, proportion, size and minor details of construction within the scope of the claims may be resorted to without departure from the spirit or sacrificing any of the advantages of the invention.

Similar characters of reference denote like or corresponding parts throughout the several figures of the accompanying drawings forming a part of this specification, and upon which,

Figure 1, shows a perspective view of the turret drilling machine complete. Fig. 2, is an enlarged side elevation of the turret head and a portion of the column of the machine for supporting the head. Fig. 3, is a front elevation of the turret head shown in Fig. 2. Fig. 4, is a top sectional plan view of the turret head and the supporting column for the same. Fig. 5, is a horizontal detail sectional plan view taken through the interlocking feed mechanism shown in Fig. 3. Fig. 6, is a bottom view of the turret head and connected parts illustrating the automatic stop for the turret head. Fig. 7, is a side elevation of the power feed releasing device as seen from the opposite side, from that shown in Fig. 2. Fig. 8, is a central vertical section through the turret head spindles, &c., taken on line 8 of Fig. 3. Fig. 9, is a detail vertical sectional view showing the interlocking spindle feed mechanism in disengaged position, and, Fig. 10, is a detached plan view of a flat steel spring wound upon an arbor for counterweighting the spindle of the turret.

Referring in detail to the characters of reference marked upon the drawings 12 represents the frame or column of the machine, 13 the countershaft connected therewith and through which the machine is driven.

14 is an upper shaft which is provided with belt pulleys that are connected and driven from the lower shaft 13. This shaft 14 is connected by beveled gears 15 with a vertical shaft 16 that in turn drives the operative mechanisms of the turret head of the drill. The work supporting table 17 is adjustably mounted upon the before mentioned column 12 and is adapted to be raised and lowered thereon and with respect to the turret head through the medium of a screw 18, beveled gears 19 and a short shaft 20, all of which are secured to the side of the column as will be seen in Figs. 1 and 2.

The turret head 21 as shown in the drawings includes four spindles 22 and 22^a, but the machine may be built with a larger or smaller number of spindles if desired. This rotatable turret is mounted in a suitable casing 23 that is secured to the side of the column 14 by means of bolts 24 as shown in Figs. 2 and 4. The rotatable parts of the turret 21 can perhaps best be understood by reference to Figs. 4, 5, 6 and 8 and wherein it will be seen that the frame of the turret head is turned up and fitted in the casing 23 so that the upper and lower annular portions 25 and 26 of the head engage and turn within the corresponding fitted portions of the casing. The upper part of this turret head is provided with an annular flange 27 that rests upon the top of the

upper annular edge of the casing in a way to support the head therein. A supporting rod 28 is hung from the upper cross portion of the machine column and is attached to the upper central portion of the head in a way to allow the said head to be turned with respect to the arm of the column.

The before mentioned shaft 16 has its upper end journaled in bearings of the arm of the column and its lower end firmly journaled in a bearing 29 secured to the side of the casing 23. This shaft 16 is provided with a sprocket wheel 30 through which the power feed for the spindles is operated as will later be more fully explained. The said shaft is also provided with gears 31 and 32, the latter of which is engaged by and serves to drive the gears 33 secured to the upper end of the three of the spindles 22. The fourth spindle 22^a is provided with a larger gear 34 that is designed to mesh with and be driven by the before mentioned gear 31 on the said shaft 16. The relative size of these two gears 34 and 31 is different from that of the gears 32 and 33 for the purpose of imparting a slower speed to the spindle 22^a than to the other three spindles, which are operated at a uniform rate of speed.

The mechanism for rotating the turret includes an annular rack 35 secured to the upper end of the said turret and is connected with and operated by a pinion 36 secured to a shaft 37 that is journaled in bearings 38 secured to the turret head casing. This shaft 37 is connected by a pair of beveled pinions 39 with a short rotary shaft carrying an operating handle 40. From the foregoing construction it will be noted that with each turn of the handle 40 and its shaft, the beveled pinion, gear and rack will turn the turret and bring the respective spindles around in an operative position. The construction provides only for the operation of the several spindles singly and for this purpose the turret is rotated to bring the respective spindles to a front or forward position. The particular spindle thus positioned is then lowered, as shown in Fig. 2, to begin its work, and may be further fed downward during its continued rotary movement either by hand or power. The several gears 32 and 33 are loosely keyed to the spindles so that they may be driven thereby and so that said spindles may also be fed vertically. A disk 28^a fixed to the rod 28 prevents the gears from rising from the top of the turret as the spindles are run up. The lower end of these spindles are journaled in sleeves 41 which includes a rack 42 for raising and lowering the spindles. The spindles are each provided on their lower ends with a suitable chuck to hold the several drills, reamers or the like when placed therein. The racks secured to the sleeves 41 are designed to be operated vertically by the detachable gear connections, shown in Figs. 8 and 9. The weight of these spindles and their tools is counterbalanced by a spring 43 secured to a stud 44 attached to the upper end of the turret head. The said spring has one end wound thereon and its other end connected to a hub 45. One end of a chain 46 is also attached to the outside of the hub, while the lower end connects with the rack 42 of the spindle so that as the spindle is lowered the spring becomes more closely wound and tightened and thus a lifting tendency is imparted to the spindle. As the spindle is released the spring and its connections draw it back to its upper position. A disk 47 is secured to the outer end of the stud 44 to insure the proper alinement and winding of the chain thereon which passes over an idler 48.

Referring to Fig. 6 it will be seen that upon the underside of the turret head is secured a series of stops 49 to engage a pawl 50 pivoted at 51 to a slide 52 mounted on the under side of the bracket 53. One end of a spring 54 is connected to the said pawl and the other end to the bracket which mechanism forms a stop to insure the proper alinement and positioning of the respective spindles as they are brought around forward. This mechanism like the feeding device for the drills may be disengaged to allow the turret head to be swung freely backward and forward to position any of the several spindles that it may be desired to use.

A block 55 is loosely hung upon a shaft 56 that is journaled in brackets 53 secured to the casing 23. An idler gear 57 is mounted upon a stud 58 secured in the said block and is for the purpose of meshing with the before mentioned rack 42, as shown in Fig. 8, when the block is thrown forward. This idler gear further meshes with and is driven by a small gear 59 on the before mentioned shaft 56. A handle 60 is secured to the outer end of said shaft for operating the same together with the said gears, rack and spindles. The swinging gear 57 and its block 55 are thrown in and out by a movement of the handle 61 mounted on a shaft 62 journaled in the before mentioned brackets 53. This shaft carries a small eccentric 63 that is engaged by a finger 64 secured to and projecting from the said block 55, the construction being such that when the lever is swung to an upright position as shown in Fig. 8, the block and gear will be thrown inward, while if drawn down, as shown in Fig. 9, the parts will be disengaged. One end of a spring 65 is secured to an arm 66 of the shaft 62 and the other end to the casing so as to normally hold the block in a closed

position, as seen in Fig. 8. A stop 67 is secured to the lower end of the block 55 and serves to engage the casing, as seen in Fig. 8, when the block is thrown in. Two cams 68 and 69 are secured to the opposite end portions of this shaft 62 and thus turn with it. The cam 68 on the left end of the shaft serves to engage an arm 70 of a spring actuated stop 71, the latter being operatively mounted in the lower portion of the turret head casing and designed to engage the turret to hold it in position when the spindle is brought forward for operation. The position of the cam upon the shaft is such that when the handle 61 is drawn down, as shown in Fig. 9, the stop 71 will be withdrawn from the turret in a way to allow the same to be rotated. On the other hand, when the handle is thrown to an upper position and the gears engaged with the rack, as shown in Fig. 8, the said stop 71 will also engage the turret. The cam 69 on the other end of the shaft serves to operate the slide 62 carrying the before mentioned pawl 50 so as to move the same forward and hold it in alinement with the travel of the stops 49.

In addition to the manual means for raising and lowering the several spindles 22 and 22a I also provide a detachable connection with the shaft 56 for operating the said spindles longitudinally by power, and which consists in mounting upon the said shaft 56 a worm gear 72 that meshes with and is driven by a worm 73 upon a shaft 74 journaled in a bracket 75 pivoted upon a screw bolt 76 secured to the before mentioned casing 23 for the turret. This bracket is normally held upward in engagement with the worm gear 72 so that the latter may be driven by the former. A worm gear 77 is mounted upon the opposite end of the shaft 74 and meshes with and is driven by a worm 78 upon a vertical shaft 79 journaled in a bracket 80. An adjustable speed gearing 81 connects the vertical shaft 79 with another vertical shaft 82 that is also journaled in the before mentioned bracket 80. The sliding clutch device 83 serves to bring either of the central trains of gears 81 into engagement in order to obtain different speeds, through the operation of a hand lever 85 pivotally mounted upon an arm 86 secured to the turret casing 23. The shaft 82 is provided with a pinion 87 upon its upper end that meshes with and is driven by a larger gear 88 mounted upon a stud 89 connected with and operated by a sprocket 90 which in turn is driven through a sprocket chain connection 91 with the before mentioned sprocket 30 upon the shaft 16. The means for engaging and disengaging the gear 72 and worm 73 will perhaps be best understood by reference to Figs. 2 and 7 wherein it will be seen that the shaft 56 is provided with an operating handle 96 and a cam like lug 93 operatively arranged within a yoke 94, secured to the said bracket 75. Referring to Fig. 7 it will be seen that the upper inner edge portion 95 of the yoke that engages the lug 93 is irregularly shaped so that as the operating handle 96 is thrown forward the lug 93 will engage the incline 95 of the yoke and force it and the bracket 75 up, thereby carrying the shaft and worm in engagement with the gear 72. This handle is provided with a pin 97 that rides on the upper edge of a lever 98 pivoted to a stud 99 and provided with a spring connection 100 whereby the said lever 98 is normally held in engagement with the pin 97. A link 101 connects the said lever with an upper lever 102 pivoted to a stud 103 carried by a bracket 104. The free end of this lever carries a roll 105 that is designed to be engaged by either of the collars 106 on the several spindles 22 and 22a. From the foregoing it will be understood that the latter mechanism is for the purpose of providing an automatic stop for the feed of the spindles which after being set, is tripped by the engagement of the collars of the said spindles with the roll on the lever 102. The connections with this lever in turn operate the lever 98 against the action of its spring 100 in a way to disengage the pin 97 from the notch 107 thereby allowing the operating handle 96 to drop back from the vertical position to an angular one, as shown in Fig. 7, which serves to disengage the driving worm 73 from the driven gear 72.

From the foregoing it will be seen that the power is imparted to the machine through the pulleys upon the shaft 13. A belt connection from other pulleys on this shaft connects with and drives pulleys on the upper shaft 14. This latter shaft drives the vertical shaft 16 which in turn drives either of the spindles 22 and 22a that happens to be in mesh therewith. This shaft 16 also serves to drive the power feed through the chain 91 and other connections, when brought into engagement. The machine is thus designed to be continually driven while the several spindles are brought forward in position to be operated. Either of the spindles may be brought into position to be rotated and may be fed vertically by either hand or power. The collars 106 upon the spindles may be set higher or lower thereon to engage the trip lever 102 sooner or later for the purpose of operating the lower lever 98 to release the yoke 94 and the bracket 75.

Having thus described my invention what I claim and desire to secure by Letters Patent is:

1. In a drilling machine, the combination with a rotatable turret, a series of rotatable

spindles mounted therein and provided with racks, a spring actuated pin to engage the turret to hold the spindles in position, a series of stops on the turret, a spring actuated pawl to engage the stops, a swinging block, gear connections carried by the block for operating any of said racks, means to throw the gear in and out of engagement with the rack and to also simultaneously operate the said pawl.

2. In a drilling machine, the combination with a suitable casing, of a rotatable turret mounted therein, a series of vertically movable spindles mounted in the turret, a sleeve to support each spindle, a driving shaft with which the spindles may be made to engage, a counterweighting device for each of the spindles, a spring actuated pin to engage the turret to hold the spindles in position, a series of stops on the turret, a spring actuated pawl to engage the stops, a swinging block, gear connections carried by the block for operating any of said racks, and means to throw the gear in and out of engagement with the rack.

3. In a drilling machine, the combination with a casing, of a rotatable turret mounted therein, a series of vertical adjustable and rotary spindles mounted in the turret, a driving shaft with which the spindles may be made to engage for rotating the same, additional connections with said driving shaft for feeding the spindles vertically, means for connecting and disconnecting the said driving connections, means to permit said spindles to be fed by either power or hand movement, an annular rack secured to the face of the turret, a gear to engage the rack, a handle, shafts and gear connections for rotating the turret, stops to hold the turret and its spindle in their operative positions, a series of stops on the turret, a spring actuated pawl to engage the stops, a swinging block, gear connections carried by the block, for operating any of said racks, and means to throw the gear in and out of engagement with the rack and to also simultaneously operate the said pawl.

Signed at Danbury in the county of Fairfield and State of Connecticut this 22nd day of June A. D., 1912.

ARNOLD TURNER.

Witnesses:
M. S. LEEBERT,
W. E. BARNES.

Copies of this patent may be obtained for five cents each, by addressing the "Commissioner of Patents, Washington, D. C."