(No Model.) 3 Sheets—Sheet 1.

J. W. DARLEY, Jr.

ELECTRIC RAILWAY.

No. 590,881. Patented Sept. 28, 1897.

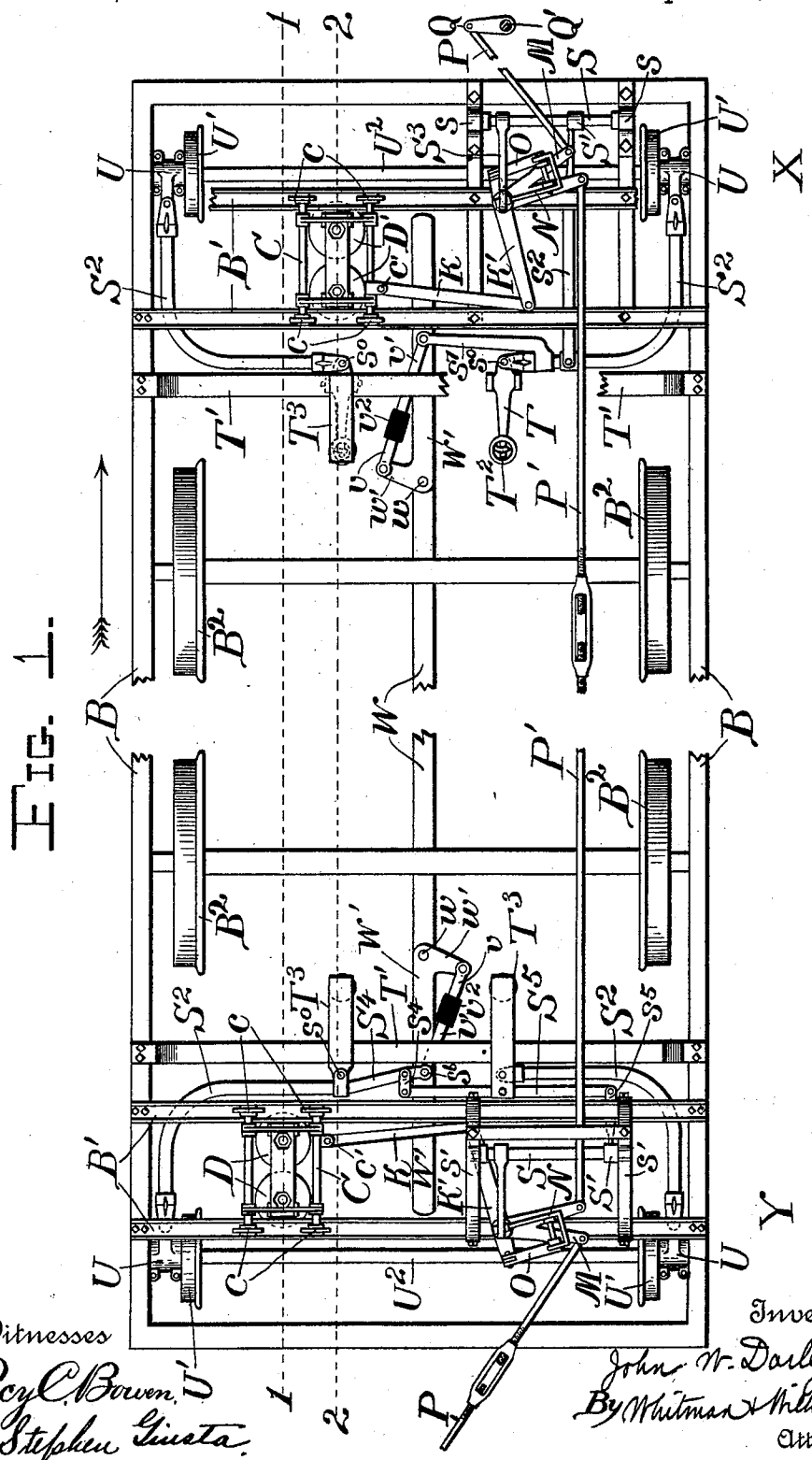

FIG. 1.

Witnesses
Percy C. Bowen.
J. Stephen Gnesta.

Inventor
John W. Darley, Jr.,
By Whitman & Wilkinson,
Attorneys.

THE NORRIS PETERS CO., PHOTO-LITHO., WASHINGTON, D. C.

(No Model.) 3 Sheets—Sheet 2.

J. W. DARLEY, Jr.

ELECTRIC RAILWAY.

No. 590,881. Patented Sept. 28, 1897.

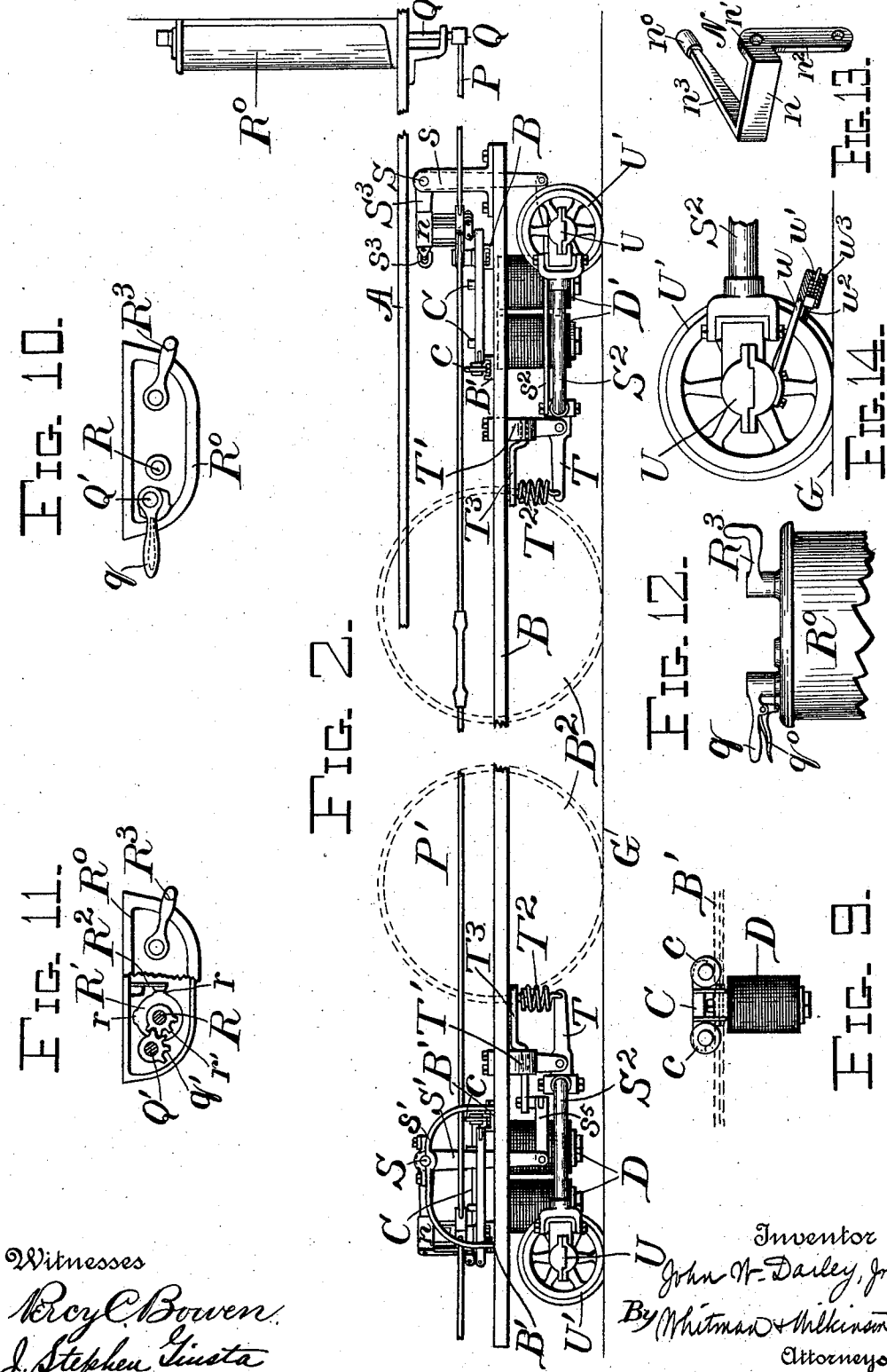

Witnesses
Roy C. Bowen
J. Stephen Gusta

Inventor
John W. Darley, Jr.,
By Whitman & Wilkinson
Attorneys.

THE NORRIS PETERS CO., PHOTO-LITHO., WASHINGTON, D. C.

(No Model.) 3 Sheets—Sheet 3.

J. W. DARLEY, Jr.

ELECTRIC RAILWAY.

No. 590,881. Patented Sept. 28, 1897.

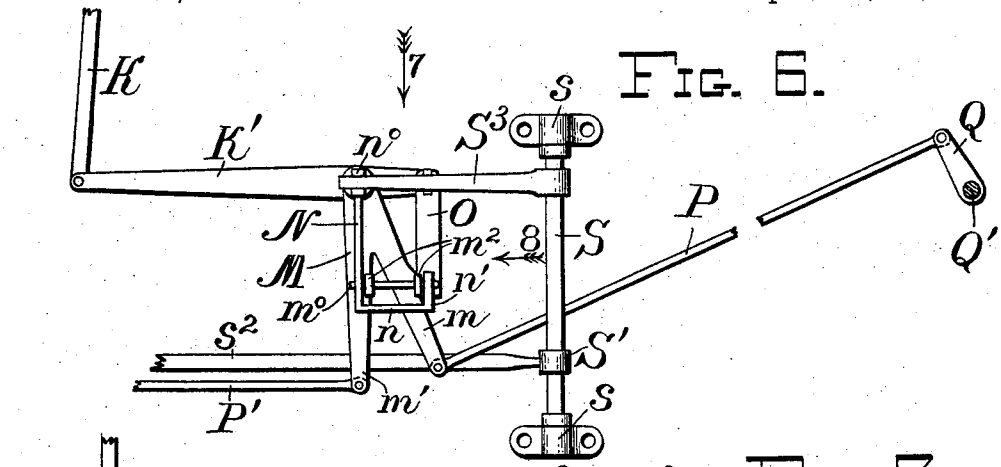

FIG. 6.

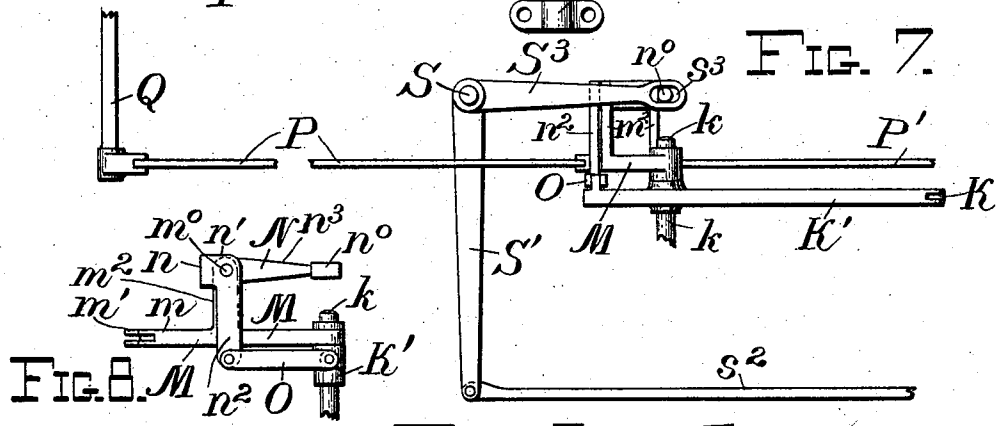

FIG. 7.

FIG. 8.

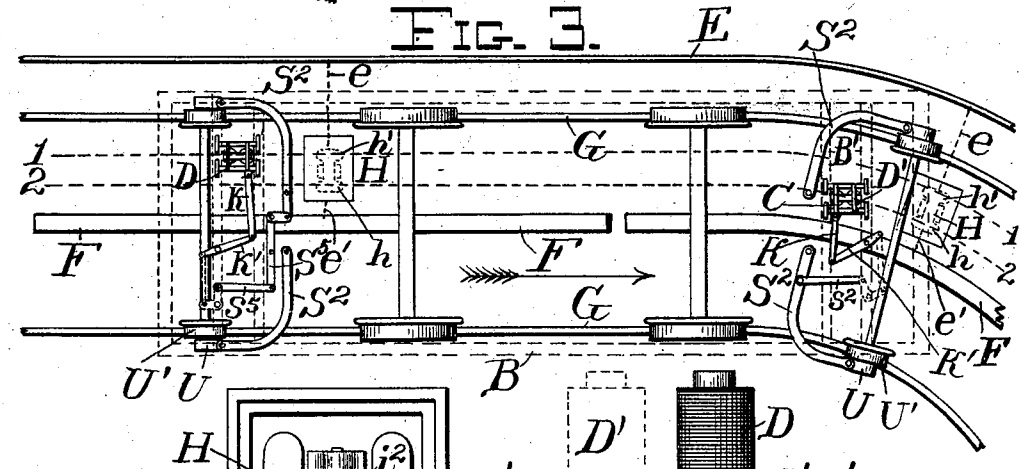

FIG. 3.

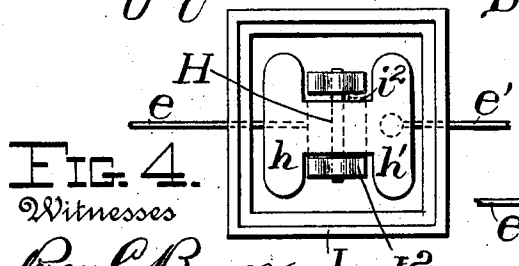

FIG. 4.

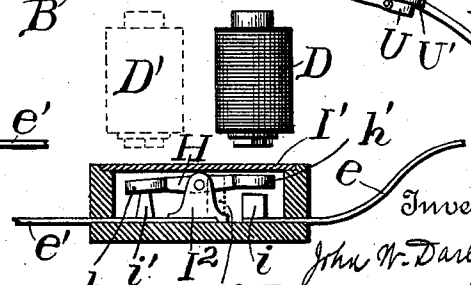

FIG. 5.

Witnesses
Percy C. Bowen.
J. Stephen Cuesta.

Inventor
John W. Darley, Jr.,
By Whitman & Williamson
Attorneys.

THE NORRIS PETERS CO., PHOTO-LITHO., WASHINGTON, D. C.

UNITED STATES PATENT OFFICE.

JOHN W. DARLEY, JR., OF BALTIMORE, MARYLAND.

ELECTRIC RAILWAY.

SPECIFICATION forming part of Letters Patent No. 590,881, dated September 28, 1897.

Application filed January 13, 1896. Serial No. 575,286. (No model.) Patented in France January 9, 1896, No. 253,078, and in England January 17, 1896, No. 1,198.

To all whom it may concern:

Be it known that I, JOHN WESLEY DARLEY, Jr., a citizen of the United States, residing at Baltimore, in the State of Maryland, have invented certain new and useful Improvements in Electric Railways, (for which I have obtained Letters Patent of France, No. 253,078, dated January 9, 1896, and Letters Patent of Great Britain, No. 1,198, dated January 17, 1896;) and I do hereby declare the following to be a full, clear, and exact description of the invention, such as will enable others skilled in the art to which it appertains to make and use the same.

My present invention relates to improvements in electric railways, and while adapted with or without modifications to various forms of electric-railway systems it is especially intended for railway systems of that class in which an interrupted conducting-rail is used and which have controlling-magnets carried by the truck to operate armatures placed along the track, the said armatures operating switches or other means for completing or for breaking the circuit, or in those systems that have a long conducting-shoe or a plurality of such shoes carried by the truck.

The object of my invention is to cause the controlling-magnet to preserve the same relation to the rails and to operate said switches or current regulating or collecting devices with approximately the same degree of accuracy and reliability on curved portions of the track as on straight portions of the track.

The said invention also consists of certain novel features of construction and also in certain novel combinations and arrangements of parts that will be hereinafter described.

Reference is had to the drawings hereunto annexed, in which the same parts are indicated by the same letters and numerals throughout the several views.

Figure 1 represents a plan view of a car-truck, the car-body having been removed and parts being broken away, and shows my improved apparatus mounted thereon. Fig. 2 represents a side elevation of the device shown in Fig. 1 and shows part of the car mounted above the truck. Fig. 3 is a diagram showing the operation of the device when the car goes around a curve in the track. Fig. 4 represents a plan view of one of the pivoted armatures with the box inclosing the same, which box is placed in the ground near the tracks. The cover of the box is omitted in this figure. Fig. 5 represents a central vertical section through the box shown in Fig. 4, the pivoted armature and attachments being shown in elevation, and the said figure also represents the operation of the magnets on the said armature. Fig. 6 is a plan view, on an enlarged scale, of a portion of the system of levers for moving the magnets transversely relative to the axis of the car. Fig. 7 represents a side elevation of the device shown in Fig. 6, looking in the direction of the arrow 7 in the said figure. Fig. 8 is a detail view of certain parts shown in Figs. 6 and 7, looking in the direction of the arrow 8 in Fig. 6. Fig. 9 represents one of the magnets and the truck for supporting the same on the car-truck. Fig. 10 is a plan view of the box at the end of the car inclosing the reversing and starting and stopping gear. Fig. 11 is a similar view to Fig. 10 with the top of the said box broken away; and Fig. 12 is a side elevation of the top of the said box, showing the hand-lever for reversing and that for starting and stopping the motor. Fig. 13 is a perspective view of one of the operating-levers. Fig. 14 is a side elevation of one of the auxiliary wheels, showing the means for cleaning snow and dirt from the same.

The electric motor used for propelling the car is not shown, it being omitted in order to avoid unnecessary complexity in the drawings, almost any of the well-known types of electric-motor gearing for street-cars being adapted for use in connection with my invention. Moreover, I make no claim herein to any specific motor to be used in connection with my invention.

A represents the platform of the car, which is supported in the ordinary way (not shown) upon the truck B, mounted on any desired number of wheels B^2. Spanning the sides of this truck or transversely disposed thereon are two grooved tracks B', in which run the wheels *c* of the carriage C, from which the magnets D or D' are suspended. This truck C, with the magnets D', or the corresponding truck at the opposite end of the car, with its

magnets D, is moved automatically in a transverse direction relative to the axis of the truck whenever the car goes around curves or by hand whenever it is desired to reverse the direction of the car, as will be hereinafter described.

E represents a feed-wire approximately parallel to the traffic-rails G, between which traffic-rails or at one side thereof, if preferred, is placed the interrupted conducting-rail F. This conducting-rail F has its various segments connected seriatim with the feed-conductor E by means of the leading-in wires *e* and *e'* and the pivoted double armature *h*. The wire *e* is connected to the stud *i*, made of conducting material, while the wire *e'* is connected to the base I^2, on which the armature H is pivoted, the other end of which wire is connected to the corresponding section of the rail F. The pivoted armature H has symmetrical ends *h* and *h'*, one of which, as *h*, is limited in its downward motion by insulating-stops *i'*, while the other end, *h'*, is adapted to make contact with the conducting-stud *i*. A very weak leaf-spring i^2 may be used both to make better contact between the armature H and its conducting-support I^2 and also to prevent any oscillations of the armature after it has been brought into the position for either closing the circuit or breaking the same, though the armature should preferably be balanced and the spring would not ordinarily be required. The friction between the armature and its pivot is ordinarily sufficient to prevent any vibration or motion of the armature during the time occupied by the travel of the car through a distance equal to that between the magnets D' and D.

The box I should preferably be made of insulating material and its cover I' of non-magnetic material of sufficient strength to form part of the road-bed.

By an inspection of Fig. 5 it will be seen that if the magnet D' (shown in dotted lines) were to attract the end *h* of the armature H then the opposite end *h'* would make contact with the conducting-stud *i* and the current would flow along the wire *e* through the lug *i* into the armature, and thence to the spring i^2 and the base-piece I^2, whence it would be carried through the wire *e'* to the rail F, or, in other words, the circuit would be closed. If, however, the magnet D (shown in full lines in Fig. 5) attracts the end *h'* of the armature H, then the circuit will be broken. By having these armatures H arranged along the track with connections, as shown, it will be obvious that if the magnets D and D', placed at opposite ends of the car, follow the lines 1 1 and 2 2, as shown in Figs. 1 and 3, then the circuit will be intermittently closed and broken and the collecting devices carried by the car could take the electricity from the interrupted rail F and carry it to the motor, as required.

It will be obvious that to run the car in different directions would require a shifting of the magnets D and D' from their respective paths (represented by the lines 1 1 and 2 2) to the corresponding path of the other magnet. Also it will be obvious that the rigidity of the car-truck will cause one end of the car to tend to project beyond the circumference of a curve in the track, and that if these magnets be placed near the ends of the car there would be a tendency for the magnet to be projected beyond the proper position for operating the armature H.

Since the lengths of the segments of the interrupted rail F will depend upon the distance apart of the magnets D and D' and it is desirable to make these segments as long as possible, it therefore becomes desirable to place these magnets as far apart as possible; in other words, at or near the ends of the car.

In order to provide for reversing the motor by moving the magnet and also to provide an adjustment for the position of the magnets in going around curves, I have invented the hereinafter-described mechanism.

Since the mechanism is substantially the same at each end of the car, I will describe that at one end in detail and then point out any differences between the two ends. The link K is connected to the magnet-truck C, as by means of the ear *c'*, and this link is pivotally connected to the long arm of the lever K', pivoted by the pin *k* to one of the grooved transverse rails B'. The short arm of the lever K' is connected by the link O to the downwardly-projecting part n^2 of the bent lever N. This bent lever N, as shown in Fig. 13, is formed with a straight back *n*, bent at right angles at each end, as at *n'* and n^3, the end *n'* being bent downwardly, as at n^2, and the arm n^3 terminating in a round end n^0, for a purpose to be hereinafter explained.

The arms *n'* and n^3 are perforated to form journal-bearings for the pin m^0, which is mounted in the upwardly-projecting legs m^2, carried by the forked lever M, which is pivoted on the pin *k*. One of the arms, *m*, of this lever is connected by the rod P to the crank Q of the auxiliary reversing-spindle Q', while the other arm, *m'*, is connected, by means of the rod P', to a similar lever M on the opposite end of the car, which operates in a similar way. This auxiliary reversing-spindle Q' is operated by hand-crank *q*, and is held in the proper position by the spring-operated pawl q^0. This spindle Q' carries a segment *q'*, meshing in the segment *r'* of the reversing-spindle R, which spindle carries a drum R', having contact-points *r*, adapted to engage the brush R^2. There are two of these points *r* for starting or reversing the motor, and the construction of the reversing-gear is well known in the art and will not be described herein. The reversing-gear is preferably mounted in a box R^0, which also incloses the starting and stopping devices operated by the hand-lever R^3. These devices are also well known in the art and will not be further described.

It will be seen that by means of the hand-lever q the spindle Q′ is rotated, operating the rod P, the lever M at the near end of the car, and, by means of the rod P′, the corresponding lever M at the far end of the car. There should preferably be one of the spindles Q′ at either end of the car, whereby the apparatus may be operated from either end, as may be desired. The lever M moves about the pin k in a horizontal direction, carrying with it the lever N, and, through the link O, moving the lever K′ and the link K, whereby the magnet-carriage C is moved from the position indicated by the line 2 2 to that indicated by the line 1 1, and vice versa. The same motion of the hand-lever q also rotates the reversing-drum R′, and thus shifts the direction of the current through the motor. Thus it will be seen that a simple motion of the hand-lever q will reverse the operation of the circuit-closing devices and will reverse the current through the motor, whereby the car can be run in opposite directions. The system of levers is so adjusted that one of the magnet-trucks will always be on the line 1 1, while the other will be on the line 2 2, or vice versa. In order to effect this arrangement of the magnet-trucks when the car goes around a curve, I provide the automatic means shown most clearly in Fig. 1, but details of which are shown in the other figures.

The boxes U are pivoted so as to turn horizontally but not vertically in the forked ends of the bent levers S^3, and journaled in these boxes is the shaft U^2, carrying the wheels U′. The shaft is held against longitudinal play in said boxes, so that any longitudinal motion of the said shaft, as in going around a curve, will swing the curved levers S^2 about their pivots s^0. These pivots s^0 allow horizontal motion, but not vertical play, to the said lever about its pivot, and vertical play is given by the levers T, to which the said curved levers S^2 are pivoted.

By placing the centers S^0 S^0 much closer together than the outer ends of the levers S^2, as shown in Fig. 1, the axle U^2 of the small wheels U′ will be caused to remain in an approximately radial direction as the small wheels pass around a curve in the track. These levers T are drawn upward by the coil-spring T^2, connected by any convenient means to the car-truck, as by means of the arm T^3 and the brace T′, as shown in Figs. 1 and 2. The spring T^2 will thus tend to hold the wheels U′ firmly down on the track and will cause them to follow closely any curve in the track.

In suitable supports s and s' on each end of the car-truck are journaled rock-shafts S, each having a downwardly-projecting arm S′ and a horizontal arm S^3. The arms S′ are connected to the curved levers S^2, so that any horizontal movement of the said curved levers caused by the wheels V′ turning on a curve will rock the shaft S, and in order to rock the said shafts in the right direction the connections must be slightly different at the two ends of the car. At the end X of the arm S′ is connected the curved lever S^2 by the connecting-rod s^2. At the end Y one of the curved levers S^2 is extended beyond its pivot s^0, as at S^4, and connected by a link s^4 to one end of a lever S^5, the other end of which is connected by a link s^5 to the arm S′. Thus when the small wheels at either end of the car turn on a curve the rock-shaft S at the same end will be turned and the horizontal arm S^3 thereof will be moved in a vertical direction. The ends of the said arms S^3 are slotted, as at s^3, to receive the rounded end n^0 of the bent lever N.

From the foregoing it will be seen that while the car is on a straight track the arm S^3 will remain in a horizontal position, thus practically locking the levers M, N, and K′ together, so that when the reversing-handle is turned they will all turn together about the pivotal pin K; but when the small wheels U′ turn upon a curve the rock-shafts S will be turned and the arm S^3 will move the arm n^3 vertically, thus turning the bent lever N about the rod m^0 and through the link O turning the lever K′ upon the pin k, while the lever M remains in its position. Thus the magnet-truck C will be moved toward or from the center of the car, while the reversing-handle remains stationary in either position. The arrangement of levers is such that the movement of the magnets will be in the proper relation to the transverse movement of the wheels U′ to cause the magnet to follow the curve of the dotted lines 1 1 and 2 2 and thus pass over their respective armatures as the car passes around the curve. (See Fig. 3.)

In cases where a long current-collector is used which is adapted to make contact with insulated studs in the street-surface, said studs being connected and disconnected from the circuit by a device similar to that shown in Fig. 4, I may arrange the same as shown in Fig. 1, in which W designates the central part of the collector, which is rigidly fixed to a convenient part of the car-truck. (Not shown.) The two ends W′ of the collector are pivoted to the ends of the central portion, as at w, and are provided with lateral arms w' near the said pivots. One of the curved levers S^2 at each end of the car is provided with an extension s^6 or s^7, and these extensions are connected to the lateral arms w' of the ends W′ of the collector by connecting-rods formed of two pieces v and v', insulated from each other by the insulators v^2. Thus when the small wheels turn on a curve the ends of the collector will be moved about their pivots to approximately conform to the curve of the conducting-rail F.

When necessary, I provide a brush or scraper to clean snow or dirt from the small wheels, the same being illustrated in Fig. 13, referring to which u designates an arm bolted to the box V and extending over the tread of the wheel.

Having thus described my invention, what

I claim, and desire to secure by Letters Patent of the United States, is—

1. The combination with the wheels U′ and the boxes U, of the magnet-carriages, and magnets carried thereby, and a system of levers connecting said boxes with the magnet-carriages, whereby the position of the said magnets is adjusted automatically whenever the car goes around a curve, substantially as described.

2. The combination in an electric-railway system having an interrupted conductor with armatures adapted to connect the segments of said conductor with a source of electricity, of a car-truck carrying magnets adapted to operate said armatures, and means controlled by the car for automatically adjusting the position of the said magnets in curved portions of the track, substantially as described.

3. The combination in an electric-railway system, of an interrupted conductor running along the track, a working conductor approximately parallel to the interrupted conductor and connected thereto by leading-in wires with pivoted armatures adapted to complete or break the circuit through said leading-in wires, magnets carried by the car, and adapted to operate said armatures, and either close or open the circuits, and means operated by the car for automatically adjusting the positions of said magnets in curved portions of the track, substantially as described.

4. The combination in an electric-railway system, of an interrupted conductor, running along the track, a working conductor approximately parallel to the interrupted conductor, and connected thereto by leading-in wires with pivoted armatures adapted to make and break circuits through said leading-in wires, magnets carried by the car and adapted to operate said armatures and either close or open the circuits, wheels mounted on axles having journal-bearings near the ends of the car, hubs having a lateral play operated by said wheels, and a system of levers operated by said hubs, and adapted to automatically adjust the position of said magnets relative to said armatures, substantially as described.

5. The combination in an electric-railway system, of an interrupted conductor running along the track, a working conductor approximately parallel to the interrupted conductor, and connected thereto by leading-in wires with pivoted armatures adapted to make and break circuits through said leading-in wires, magnets carried by the car and adapted to operate said armatures and either close or open the circuit, wheels mounted on an axle having journal-bearings near the end of the car, hubs having a lateral play operated by said wheels, and a system of levers operated by said hubs, and adapted to automatically adjust the position of said magnets relative to said armatures, the said levers being pivoted near the longitudinal axis of the car, and being bent outward toward said hubs, substantially as described.

6. The combination in an electric-railway system of an interrupted conductor running along the track, a working conductor approximately parallel to the interrupted conductor, and connected thereto by leading-in wires with pivoted armatures adapted to make and break circuits through said leading-in wires, magnets carried by the car and adapted to operate said armatures and either close or open the circuit, wheels mounted on an axle having journal-bearings near the end of the car, hubs having a lateral play operated by said wheels, and a system of levers operated by said hubs, and adapted to automatically adjust the position of said magnets relative to said armature, the said levers being pivoted near the longitudinal axis of the car, and being bent outward toward said hubs, and springs pressing said levers downward to hold said wheels firmly on the track, substantially as described.

7. The combination in an electric-railway system of an interrupted conductor running along the track, a working conductor approximately parallel to the interrupted conductor and connected thereto by leading-in wires with pivoted armatures adapted to complete or break the circuit through said leading-in wires, laterally-movable wheeled magnet-carriages mounted on the car-truck, with magnets carried by said carriages and adapted to operate said armature and either close or open the circuit, and means operated by the car for automatically adjusting the positions of said magnets in curved portions of the track, substantially as described.

8. The combination in an electric-railway system of an interrupted conductor running along the track, a working conductor approximately parallel to the interrupted conductor, and connected thereto by leading-in wires with pivoted armatures adapted to make and break circuits through said leading-in wires, laterally-movable wheeled magnet-carriages mounted on the car-truck, with magnets carried by said carriages and adapted to operate said armatures and either close or open the circuit, wheels mounted on an axle having journal-bearings near the end of the car, hubs having a lateral play operated by said wheels and a system of levers operated by said hubs and adapted to automatically adjust the position of said magnets relative to said armatures, substantially as described.

9. The combination in an electric-railway system, of an interrupted conductor running along the track, a working conductor approximately parallel to the interrupted conductor, and connected thereto by leading-in wires with pivoted armatures adapted to make and break circuits through said leading-in wires, laterally-movable wheeled magnet-carriages mounted on the car-truck, with magnets carried by said carriages and adapted to operate said armatures and either close or open the circuit, wheels mounted on an axle having journal-bearings near the end of the car, hubs

having a lateral play operated by said wheels and a system of levers operated by said hubs, and adapted to automatically adjust the position of said magnet-carriages relative to said armatures, the said levers being pivoted near the longitudinal axis of the car, and being bent outward toward said hubs, substantially as described.

10. The combination in an electric-railway system, of an interrupted conductor running along the track, a working conductor approximately parallel to the interrupted conductor, and connected thereto by leading-in wires with pivoted armatures adapted to make and break circuits through said leading-in wires, laterally-movable wheeled magnet-carriages mounted on the car-truck, with magnets carried by said carriages and adapted to operate said armature and either close or open the circuit, wheels mounted on an axle having journal-bearings near the end of the car, hubs having a lateral play operated by said wheels and a system of levers operated by said hubs and adapted to automatically adjust the position of said magnet-carriages relative to said armatures, the said levers being pivoted near the longitudinal axis of the car, and being bent outward toward said hubs, and springs pressing said levers downward to hold said wheels firmly on the track, substantially as described.

11. In an electric railway, the combination with the car-truck and laterally-movable magnets carried thereby, of means operated by hand for shifting said magnets laterally, and means operated by said magnets for completing the electric circuit through the motor on the car, substantially as described.

12. In an electric railway, the combination with the car-truck and laterally-movable magnets carried thereby, of means operated by hand for simultaneously shifting said magnets laterally, and for altering the direction of the current for reversing the motor, and means operated by said magnets for completing the electric circuit through the motor on the car, substantially as described.

13. In an electric railway, the combination with the car truck and laterally-movable magnets carried thereby, of means operated by hand for shifting said magnets laterally, means for locking said hand shifting apparatus, and means operated by said magnets for completing the electric circuit through the motor on the car, substantially as described.

14. In an electric railway, the combination with the car-truck and laterally-movable magnets carried thereby, of means operated by hand for simultaneously shifting said magnets laterally, and for altering the direction of the current for reversing the motor, means for locking said hand shifting apparatus, and means operated by said magnets for completing the electric circuit through the motor on the car, substantially as described.

15. In an electric railway, the combination with the car-truck and laterally-movable magnets carried thereby, of means operated by hand for shifting said magnets laterally, comprising a shaft Q′ with hand-lever for turning the same, and a system of levers operated by said shaft and connected to the said magnets, and means operated by said magnets for completing the electric circuit through the motor on the car, substantially as described.

16. In an electric railway, the combination with the car-truck and laterally-movable magnets carried thereby, of means operated by hand for shifting said magnets laterally, comprising a shaft Q′ with hand-lever for turning the same, and a system of levers operated by said shaft and connected to the said magnets, means for simultaneously altering the direction of the current for reversing the motor, and means operated by said magnets for completing the electric circuit through the motor on the car, substantially as described.

17. In an electric railway, the combination with the car-truck, of a laterally-movable carriage carried thereby, and magnets on the said carriage, means operated by hand for shifting said magnet-carriage laterally, means for locking said hand shifting apparatus, and means operated by said magnets for completing the electric circuit through the motor on the car, substantially as described.

18. In an electric railway, the combination with the car-truck of a laterally-movable carriage with magnets carried thereby, means operated by hand for simultaneously shifting said magnet-carriage laterally, and for altering the direction of the current for reversing the motor, means for locking said hand shifting apparatus, and means operated by said magnets for completing the electric circuit through the motor on the car, substantially as described.

19. In an electric railway, the combination with the car-truck of a laterally-movable carriage with magnets carried thereby, of means operated by hand for shifting said magnet-carriage laterally, comprising a shaft Q′ with hand-lever for turning the same, and a system of levers operated by said shaft and connected to said magnet-carriage, means for locking said hand shifting apparatus, and means operated by said magnets for completing the electric circuit through the motor on the car, substantially as described.

20. In an electric railway, the combination with the car-truck of a laterally-movable carriage with magnets carried thereby, of means operated by hand for simultaneously shifting said magnet-carriage laterally, comprising a shaft Q′ with hand-lever for turning the same, and a system of levers operated by said shaft and connected to said magnet-carriage, means for altering the direction of the current for reversing the motor, comprising a reversing-drum with contacts carried thereby, and gearing connecting said drum with said shaft Q′, means for locking said hand shifting apparatus, and means operated by said magnets for completing the electric circuit

through the motor on the car, substantially as described.

21. In an electric railroad provided with a sectional conductor and armatures operating as switches along the roadway for cutting the conductor-sections into and out of circuit, of two traveling electromagnets, one closing and the other opening the switches, and means for shifting the magnets laterally, substantially as described.

22. In an electric railroad provided with a sectional conductor and armatures operating as switches along the roadway for cutting the conductor-sections into and out of circuit, of two traveling electromagnets, one for closing and the other for opening the switches and means for shifting the magnets in opposite directions to operate the switches in the same order when the direction of travel is reversed, substantially as described.

23. In an electric railroad provided with a sectional conductor and armatures acting as switches along the roadway for cutting the conductor-sections into and out of circuit, of two traveling electromagnets, one for closing and the other for opening the switches, and a system of links and levers for shifting the magnets laterally, substantially as described.

24. In an electric railroad provided with a sectional conductor and armatures acting as switches along the roadway, for cutting the conductor-sections into and out of circuit, of two traveling electromagnets, one for closing and the other for opening the switches, guide or pilot wheels, for each magnet, traveling on the tracks, and a system of links and levers between each magnet and the respective pilot-wheels for maintaining the magnets in alinement with the switches on curves, substantially as described.

25. In an electric railroad provided with a sectional conductor and armatures acting as switches along the roadway for cutting the conductor-sections into and out of circuit, two traveling electromagnets, and operating mechanism for each magnet for shifting it laterally relative to its support, consisting of two levers, one fulcrumed on the other and connected to the magnet, and the other lever being under the control of the motorman, and pilot or guide wheels running on the traffic-rails and connected to the first-named lever, substantially as described.

In testimony whereof I affix my signature in presence of two witnesses.

JOHN W. DARLEY, JR.

Witnesses:
A. L. WILMERTON,
M. V. BENNETT.