May 2, 1950 A. E. TURNER 2,506,120

GAS WALL HEATER

Filed June 21, 1947 2 Sheets-Sheet 1

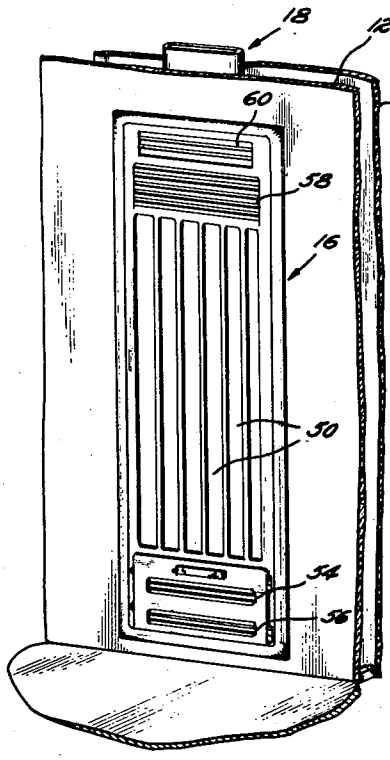

Fig. 1

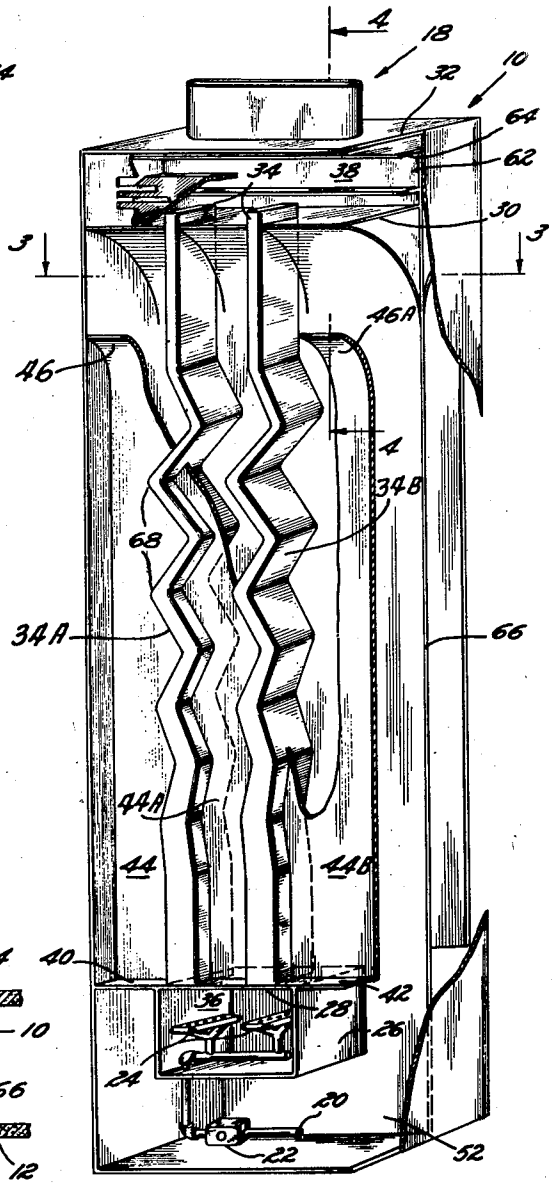

Fig. 2

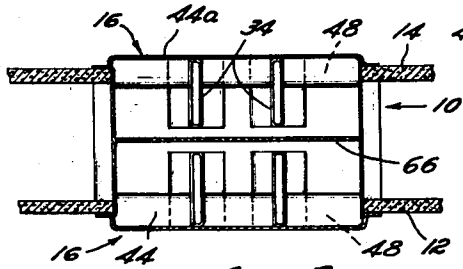

Fig. 3

INVENTOR.
AL E. TURNER
BY
Howard D. Johnson
ATTORNEY

May 2, 1950 A. E. TURNER 2,506,120

GAS WALL HEATER

Filed June 21, 1947 2 Sheets-Sheet 2

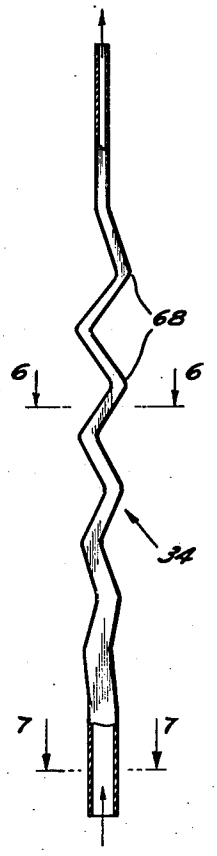

Fig. 5



Fig. 6



Fig. 7

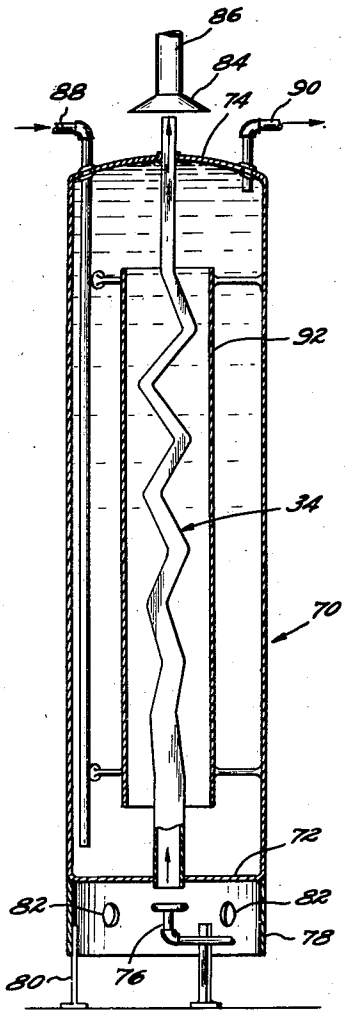

Fig. 8

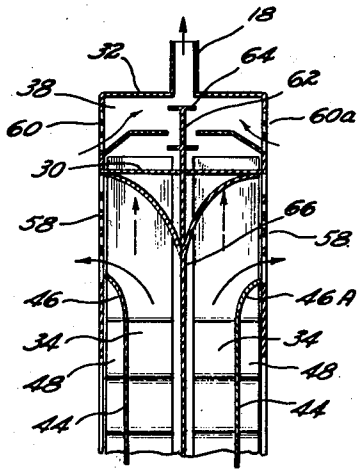

Fig. 4

INVENTOR.
AL E. TURNER
BY
Howard L. Johnson
ATTORNEY

Patented May 2, 1950 2,506,120

UNITED STATES PATENT OFFICE

2,506,120

GAS WALL HEATER

Al E. Turner, El Monte, Calif.; Annis R. Turner administratrix of said Al E. Turner, deceased

Application June 21, 1947, Serial No. 756,163

3 Claims. (Cl. 126—90)

1

This invention relates to a particularly efficient tubular heating element and to its employment in heating units such as those utilizing circulating air or water.

An object of the invention is to provide a wall heating unit employing such tubular heating elements and having means for warming the room therefrom by conduction, convection and radiation.

Another purpose is the provision of a water heater employing my tubular heating element.

A salient feature of my invention resides in a tubular heating element open at both ends so as to convey combustion gases therethrough, which tube is characterized by lateral zig-zag portions progressively increasing in angularly from the vertical axis of the tube and by its cross sectional area progressively decreasing.

Other objects and advantages of the invention will be apparent from the following description and claims, the novelty consisting in the features of construction, combination of parts, the unique relations of the members and the relative proportioning, disposition, and operation thereof, all as more completely outlined herein and particularly pointed out in the appended claims.

In the drawings which form part of the present specification:

Figure 1 is a perspective view of a panel wall heater embodying my invention;

Figure 2 is an enlarged perspective view of the heater with the front cover plate removed and parts broken away;

Figure 3 is a horizontal sectional view taken through the heater along the lines 3—3 of Figure 2;

Figure 4 is a partial vertical sectional view thru the heater taken along the line 4—4 of Figure 2;

Figure 5 is a side elevational view, partly in section, of my tubular heating element;

Figures 6 and 7 are horizontal sectional views taken thru the tube along the lines 6—6 and 7—7 of Figure 5; and

Figure 8 is a vertical sectional view taken thru a water heater embodying my invention.

Referring particularly to Figures 1 to 6, the panel wall heater there illustrated is adapted to be mounted in a common wall between two adjacent rooms so that the heater may be used selectively to warm either or both of the rooms. A generally rectangular housing 10 is provided to be mounted jointly thru adjacent side walls 12 and 14 of the two rooms with a facing panel 16 adapted to be mounted more or less flush with

2

the outer face of each room wall, 12 and 14. A flue 18 is disposed at the top of the housing to convey products of combustion upward between the side walls to an external vent (not shown), while a suitable fuel such as gas or oil is conveyed to the bottom of the unit by the line 20, then thru a check valve 22 to individual burners 24 disposed in a separate housing 26 at the base of the unit.

Disposed between the top 28 of the burner housing and a horizontal partition 30 spaced downward from the roof 32 of the housing unit there are a number of elongated hollow tubes 34 opening at their lower ends into the burner chamber 36 and at their upper ends into an exhaust chamber 38 which is in communication with the flue.

As seen particularly in Figure 3, the respective tubes are generally rectangular or oval in cross section and are mounted with their edges adjacent the facing panel of each room, two tubes being shown for each room or a total of four for the unit.

The ceiling of the burner chamber is provided with a pair of lateral extensions 40, 42 extending oppositely along the front edge of the ceiling. Supported along the rear edge of the lateral extension 40 is an upright deflection wall 44 set back a short distance from the edge of the elongated hollow tube 34A. The wall 44 fits snugly between the tube 34A and the side of the rectangular housing 10 so as to form substantially airtight joints. The deflection wall 44 is curved outwardly to the edge of the tube 34A, so as to form a lip 46. Similarly supported on the top 28 of the burner housing is an upright deflection wall 44A set back an equal distance from the edges of the tubes 34A and 34B as the upright deflection plate 44 is from the edge of the tube 34A. The upright deflection plate 44A fits snugly between the tubes 34A and 34B so as to form substantially airtight joints. The deflection wall 44A is curved outwardly at its upper extremity (not shown) to the edge of the tube 34A and the edge of the tube 34B to form a lip similar to lip 46 of wall 44. Similarly supported along the rear edge of the lateral support 42 is a third upright deflection wall 44B set back a distance from the edge of the elongated hollow tube 34B equal to the distance wall 44A is set back from the edge of the tube 34B. The wall 44B fits snugly between the elongated tube 34B and the side wall of the rectangular housing 10 so as to form substantially airtight joints. The deflecting wall 44B is curved outwardly at its upper extremity to

the edge of the tube 34B to form the lip 46A. Thus the three walls 44, 44A and 44B form in effect one single wall which is set back from the edges of the tubes 34A and 34B and curved outwardly at the upper extremities to form a lip which extends to the edge of the tubes 34A and 34B. This will be referred to henceforth as a single wall 44 to simplify the specification. The facing panel 16 when mounted along the front of the housing 10 substantially adjacent the forward edges of the upright tube, thus defines a chamber 48 between its inner face and the deflecting wall 44 and is provided with longitudinal slots 50 to permit the free access of air to the chamber from the adjacent room. Accordingly as the tubes are heated (as will be more clearly explained shortly) their forward edge radiates heat into the room while air moving in and out of the chamber 48 thru the openings 50 is also warmed by contact with the tubes.

Air is admitted from the room to the burner chamber 36 and the lower surrounding chamber 52 thru louvres 54 and 56 in the facing panel, the air from the latter chamber moving upward in the channel formed between the inner faces of the two deflecting panels 44 and 44*a* and thence outward into one room or the other thru an upper louvre 58 directly above the out-turned lip 46 of the deflecting wall, the current of air being thus heated thru its upward passage by contact with the portions of the heating tubes located between the two deflecting walls. In turn, the air drawn into the combustion chamber moves upward thru the tubes together with the heated combustion gases and is admitted at the top into the exhaust chamber 38 where further up-draft is provided by air entering a top louvre 60, the mixture then passing out through the flue 18. A T-shaped baffle 62 is mounted across the exhaust chamber parallel to the top louvres 60 and 60*a* with its cross arm 64 spaced below the flue opening. If desired, the vertical portion of baffle 62 may be extended downward to form a partition 66 separating the tubes pertaining to the respective rooms.

The several tubes 34 are individual characterized by upward extending, zigzag portions 68 progressively increasing in angularity to the vertical and are simultaneously progressively and uniformly restricted in cross section or volume without substantial decrease of surface area so as the slant of the successive angular walls of the tube becomes greater, the opposite tube side walls are located closer together. For example, practical dimensions for such a tube of an overall height of 3½ feet and having a constant width of 3 inches along its length, are an edge of one and three-quarters inches at the bottom which tapers progressively to five-eighths inch edge at the top. It has been found that a tube so constructed, by its decreasing upward cross section compensates for the decreased volume of the heated gas occasioned by cooling as the gas moves upward through the tube. Accordingly a substantially uniform distribution of heat throughout the length of the tube occurs, in marked contrast to prior heating units which might become red hot at the bottom and still remain comparatively cool at the top. It is notable that by the present construction, as soon as the burner is lighted at the base, the top of the tube becomes immediately warm, thus showing that heat is transmitted to the tube walls by the gas substantially uniformly throughout its length, the actual combustion of course taking place at the base of the tube.

In the embodiment illustrated in Figure 8, the heating tube 34 is shown mounted in an upright water tank 70 and extending thru the bottom and top walls, 72 and 74 respectively. A burner 76 is centrally mounted within the base section 78 of the heater which is supported on legs 80 and provided with suitable air inlets 82, in the base. As before, the heated gases move upward thru the tube and are here emitted into a hood 84 spaced above the top outlet and connected by a flue pipe 86 to an external vent. Cold water is led into the tank by a pipe 88 having an opening disposed adjacent the bottom thereof, while heated water is drawn off from the top of the tank by the line 90. A cylindrical, open-ended shield 92 is circumposed on the heating tube 34 and spaced apart thereon to provide a channel for rising water being heated by the tube.

While the invention has been particularly described and illustrated by reference to specific embodiments of hot air wall heaters and circulating water heating systems, it will be understood that these are given by way of illustration of preferred embodiments only and that the invention is susceptible to modification and variation within the scope of the appended claims which are to be interpreted broadly and limited only by the prior art.

I claim:

1. A heating unit adapted to be mounted in the wall of a room, including: a housing, walls defining a combustion chamber disposed adjacent the bottom of the housing, a burner disposed in said combustion chamber, walls defining an exhaust chamber disposed adjacent the top of the housing, at least one, generally upright, open-ended tube joining the combustion chamber and exhaust chamber, said tube being characterized by lateral zigzag portions progressively increasing in angularity from the vertical axis of said tube upward and by its cross sectional area progressively decreasing as said tube approaches said exhaust chamber, upright deflecting walls disposed within the housing on either side of said tube, and defining between said deflecting walls and the back of the housing an air channel adapted to circulate air from the room upward in contact with said tube and to return the thus-heated air to the room.

2. A heating unit adapted to be mounted in the wall of a room, including: a housing, walls defining a combustion chamber disposed adjacent the bottom of the housing, a burner disposed in said combustion chamber, walls defining an exhaust chamber disposed adjacent the top of the housing, at least one, generally upright, open-ended tube joining the combustion chamber and exhaust chamber, said tube being characterized by lateral zigzag portions progressively increasing in angularity from the vertical axis of said tube upward and by its cross sectional area progressively decreasing as said tube approaches said exhaust chamber, upright deflecting walls disposed within the housing on either side of said tube, and defining between said deflecting walls and the back of the housing an air channel adapted to circulate air from the room upward in contact with said tube and to return the thus-heated air to the room, and a facing panel mounted along the housing so as to define a chamber between it and the adjacent deflecting walls, said panel having air openings in communication with said chamber.

3. A heating unit adapted to be mounted in a wall between adjacent rooms, including: a housing, walls defining a combustion chamber disposed adjacent the bottom of the housing, a burner disposed in said combustion chamber, walls defining an exhaust chamber disposed adjacent the top of the housing, at least one, generally upright, open-ended tube joining the combustion chamber and exhaust chamber adjacent each room, said tubes being laterally spaced apart and individually characterized by lateral zig-zag portions progressively increasing in angularity from the vertical axis of said tubes upward and by their cross-sectional area progressively decreasing as said tubes approach said exhaust chamber, upright deflecting walls disposed within the housing adjacent and generally parallel to the front and back walls of said housing and secured to the adjacent tube side walls so as to define an upright air channel adapted to circulate air in contact with said tubes between the upright deflecting walls, facing panels mounted along the front and back walls of said housing so as to

define chambers between said facing panels and the adjacent deflecting walls, said panels having air openings in communication with said last named chambers, said panels having other air openings above and below said last named chambers which are in communication with said channel.

AL E. TURNER.

REFERENCES CITED

The following references are of record in the file of this patent:

UNITED STATES PATENTS

Number	Name	Date
D. 132,423	Anderson et al.	May 19, 1942
1,287,980	Harpster	Dec. 17, 1918
1,757,905	Guenther	May 6, 1930
2,247,849	Ritter	July 1, 1941

FOREIGN PATENTS

Number	Country	Date
7,076	Great Britain	Mar. 23, 1906