Jan. 15, 1935. S. J. THACKERAY 1,988,365

AUTOMATIC COUNTING DEVICE

Filed Sept. 12, 1933 2 Sheets-Sheet 1

Fig. 1

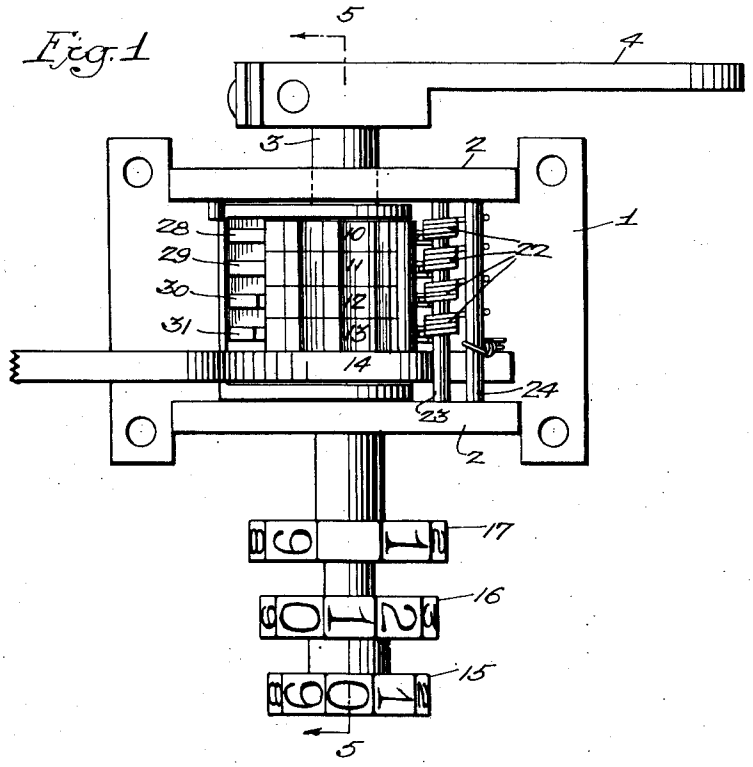

Fig. 2.

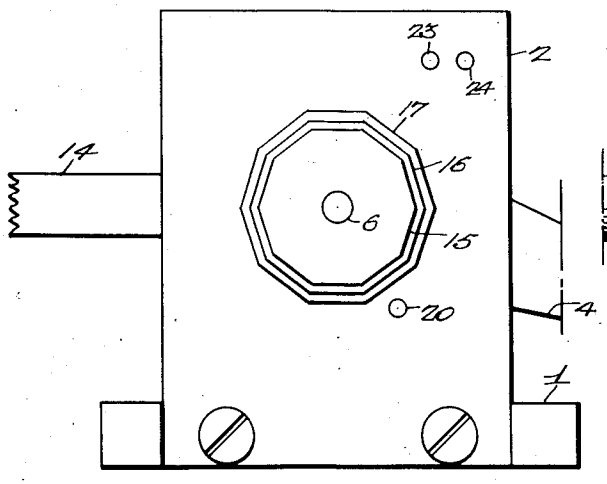

Fig. 3.

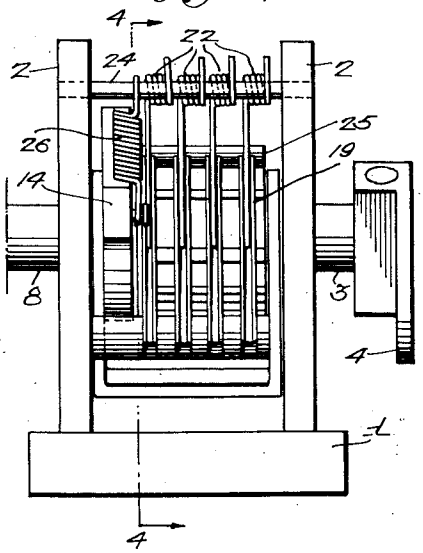

Inventor:
Samuel J. Thackeray
by his Attorneys
Howson & Howson

Jan. 15, 1935. S. J. THACKERAY 1,988,365

AUTOMATIC COUNTING DEVICE

Filed Sept. 12, 1933 2 Sheets-Sheet 2

Fig. 4

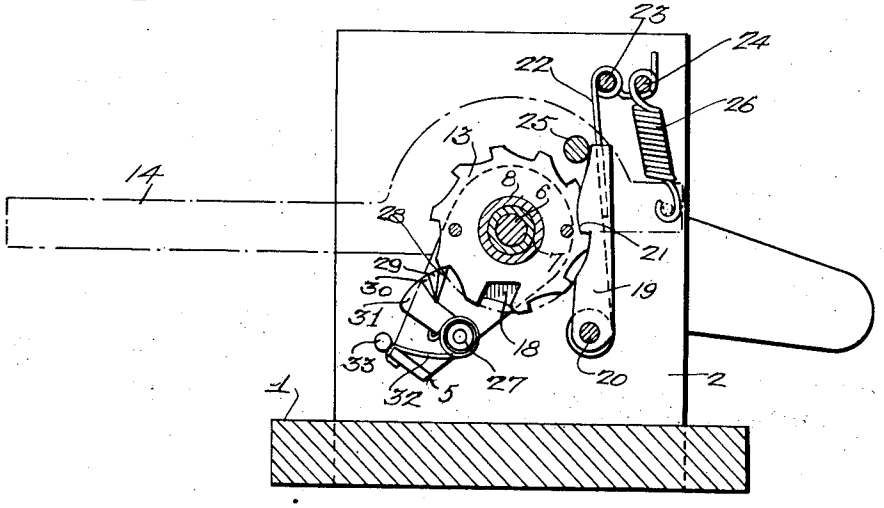

Fig. 5

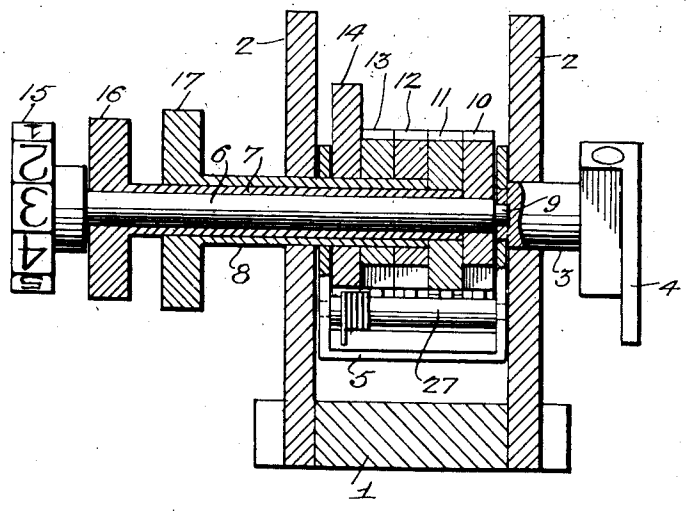

Inventor
Samuel J. Thackeray.
By his Attorneys
Howson & Howson

Patented Jan. 15, 1935 1,988,365

UNITED STATES PATENT OFFICE

1,988,365

AUTOMATIC COUNTING DEVICE

Samuel J. Thackeray, Philadelphia, Pa., assignor to Soabar Company, Philadelphia, Pa., a corporation of Pennsylvania

Application September 12, 1933, Serial No. 689,117

3 Claims. (Cl. 235—132)

This invention relates to improvements in automatic counting devices, and the principal object of the invention is to provide an extremely simple and efficient device of the stated character.

Another object of the invention is to provide a device of the stated character that may be used as an automatic trip for stop mechanism following predetermined numbers of operations, for example, of a machine with which said mechanism is associated.

The invention further resides in the novel structural details and arrangements of parts hereinafter set forth and illustrated in the attached drawings, in which:

Figure 1 is a plan view of one embodiment of my invention;

Figs. 2 and 3 are, respectively, side and front elevations of the device shown in Fig. 1;

Fig. 4 is a section on the line 4—4, Fig. 3, and Fig. 5 is a section on the line 5—5, Fig. 1.

With reference to the drawings, the device comprises in the illustrated embodiment a base frame 1 including a pair of spaced side plates 2, 2. Journaled in one of the side plates is a shaft 3 which carries at its outer end, and in the present instance adjustably secured thereto, a lever arm 4. The inner end of the shaft 3 carries a U-shaped member 5 whose parallel arms lie respectively adjacent the inner faces of the side plates 2, 2.

Projecting through and journaled in the opposite side plate 2 is a nest of shafts 6, 7 and 8, the inner end of the shaft 6 having a reduced extension 9 journaled in the inner end of the shaft 3, see Fig. 5. The shafts 3, 6, 7 and 8 are coaxial.

Carried at the inner end of the shaft 6 is a ratchet wheel 10; while at the inner ends of the hollow shafts 7 and 8 are similar ratchet wheels 11 and 12 respectively. A fourth ratchet wheel 13 of the series is carried by an arm 14 journaled on the shaft 8 and projecting as shown in broken lines in Fig. 4 beyond the edge of the plates 2, 2. As shown in Fig. 5, the free end of the U-shaped member 5 also is journaled upon the shaft 8.

The shafts 6, 7 and 8, which under normal conditions are free to rotate independently, each carries at its outer end a disk, 15, 16 and 17, respectively, which in the present instance are decagonal in form, and as shown in Fig. 1, the flat peripheral facets of these disks carry numbers ranging from zero to nine. Also each of the ratchet wheels has ten teeth, and the space between one set of teeth is recessed, as shown at 18 in Fig. 4. The ratchet wheels are normally releasably retained in their respective adjusted positions by a series of detents 19, 19, one for each ratchet wheel, which detents are pivotally mounted upon a shaft 20 mounted in and extending between the side plates 2. As shown in Fig. 4, these detents have teeth 21 which are shaped to engage the teeth of their respective ratchet wheels to thereby prevent a reverse rotation of the latter.

Operatively associated with each of the detents 19 is a spring 22 which is carried by a pin 23 extending between the side plates 2, and which has arms respectively engaging the associated detent 19 and a rod 24 also extending between the side plates 20, as shown in Fig. 1. A rod 25 projecting transversely from one side of the lever 14 is adapted when this lever is elevated to engage the upper ends of the detents 19 to throw all of the detents rearwardly and out of engagement with the ratchet wheels which they respectively engage for a purpose hereinafter set forth. A coiled spring 26 secured to the pin 24 and to the inner end of the arm 14 tends to hold the said arm in the normal position in which it is shown in broken lines in Fig. 4.

Journaled in the lower end of the member 5 and extending transversely between the parallel arms of the latter is a pawl shaft 27 which carries a series of pawls 28, 29, 30 and 31. These pawls respectively engage the ratchet wheels 10, 11, 12 and 13, and are so relatively arranged to each other and to the ratchet wheels that when the pawl 28 engages the peripheral face of the ratchet wheel 10, the remaining pawls, as shown in Figs. 1 and 4, are held away from engagement with the teeth of their respective associated ratchet wheels. Similarly, when the pawl 29 engages the face of the ratchet wheel 11, the pawls 30 and 31 must necessarily be held out of contact with their respective ratchet wheels; and the same condition prevails between the pawls 30 and 31 and their respective ratchet wheels. Under this arrangement, the only time at which the pawl 29 may contact with its ratchet wheel is when the pawl 28 enters the recess 18 of its associated ratchet wheel. Similarly, the pawl 30 is permitted to contact with the ratchet wheel 12 only when both the pawls 28 and 29 occupy the recess 18 of the ratchet wheels 10 and 11; and contact between the pawl 31 and the ratchet 13 is permitted only when the other pawls occupy the respective recesses. A spring 32 on the pawl shaft 27 has its opposite ends engaging the cross arm of

the U-shaped member 5, while its other arm engages behind the pawl 31, see Fig. 4, this spring thereby exerting a pressure tending to swing the pawl shaft about its axis to bring the pawls into engagement with the ratchet wheels. Forward movement of the member 5 is limited by a stop pin 33 extending between the side plates 2, 2, see Fig. 4.

The parts of the mechanism described above are so relatively arranged that when the three zero facets of the number disks 15, 16 and 17 are in alignment, the recesses 18 of the associated ratchet wheels 10, 11 and 12 are also in alignment, and when the three number disks 15, 16 and 17 so aligned are turned to a predetermined position, say with the three zero facets uppermost, the recesses 18 of the ratchet wheels 10, 11 and 12 are in alignment with the recess 18 of the ratchet wheel 13. Also in this position, the recesses are so located with respect to the pawl shaft 27 that the pawls may enter the recesses whereby they are collectively effective to engage their ratchet wheels when the member 5 is oscillated by movement of the lever 4. When, for example, in this relative position of the parts the lever 4 is depressed from an elevated position to the position in which it is shown in the drawings, the resultant movement of the member 5 and of the pawl shaft 27 will, by reason of the engagement of the pawls with their respective ratchet wheels, cause a corresponding rotation of the said wheels and an elevation of the outer end of the lever 14 from its normal horizontal position in which it is shown in Figs. 2 and 4. If now the disk 15 is manually turned to bring any one of the numbers from one to nine into alignment with the two zero facets of the disks 16 and 17, it will be apparent that the pawl 28 will no longer occupy the recess 18, but will engage the periphery of the ratchet wheel 10 at another point. The pawls 29, 30 and 31 will thereby be adjusted radially out of engagement with their respective ratchet wheels so that reciprocation of the lever 4 can result only in a periodic rotation through the pawl 28 of the ratchet wheel 10. Each stroke of the arm 4 advances this ratchet wheel to the extent of one tooth and effects a corresponding advance movement of the number disk 15. When this disk has been rotated sufficiently to bring the zero facet in line with the already aligned zero facets of the other disks, the pawl 28 will again enter the recess 18 of the ratchet wheel 10, thereby permitting the other pawls to reenter the recesses 18 of the other ratchet wheels so that the subsequent downward movement of the lever 4 will result in a simultaneous movement of all of the ratchets 10, 11, 12 and 13, and through the ratchet 13 an upward movement of the outer end of the lever 14. This upward movement of the outer end of the lever 14, as will be clear from Fig. 4, will cause the transverse pin 25 engaging the upper ends of the pawls 19 to disengage the pawls from their respective ratchets, so that when the lever 4 is released, the pawls are ineffective to retain the ratchets in their advanced position. As a result of this release of the detents 19 and of the action of the pawls 28, 29, 30 and 31, the ratchets when the lever 4 is released will return with the lever 14 to their original positions, and any further oscillation of the lever 4 will result only in a corresponding oscillation of the ratchet wheels.

It will be apparent when the disk 15 has been moved from the position originally described in which the zero facet is in alignment with the corresponding facets of the disks 16 and 17 and one of the numbers, say four of the disk 15 is so brought into alignment with the zero facets of the other disks, that four strokes of the lever 4 are necessary, by action of the pawl 28 on the ratchet wheel 10, to bring this disk 15 back to its original position, and that the fifth stroke of the lever 4 will result as previously described in an elevation of the outer end of the lever 14. Assuming, therefore, that the arm 14 constitutes a trip means for interrupting the operation of a machine with which the device is associated, it will be apparent that following the setting of the disk 15 as described, the operation of the mechanism will be interrupted after the fifth oscillation of the said lever 4. It is accordingly necessary with this device, where a given number of oscillations is required before the operation of the machine is to be interrupted, to set the disks so that they register one less than the total number of oscillations of the lever 4 required. Assuming that the oscillations of the lever 4 correspond to a given number of desired operations performed by the machine, it will be apparent that the device affords a simple means for automatically stopping the machine following any given number of operations.

Where a larger number of operations than nine is required, say ten for example, this may be had by adjustment of the disk 16 so that its number one is aligned with the zero facet of the disk 15 and the corresponding facet of the disk 17. Where more than one hundred operations are required, it is necessary to utilize the disk 17, adjustment of the three disks so that one less than the desired number of operations desired appears at the top giving the desired results. The mechanism may readily be set by adjustment of the number disks 15, 16 and 17, as required.

The device is extremely simple in form and efficient in operation, and in these respects constitutes a material improvement over similar devices previously used for a like purpose.

I claim:

1. In a device of the stated character, the combination with a normally stationary trip member, of a relatively movable ratchet having a plurality of spaced teeth and a recess serially arranged with the teeth, an index member connected with said ratchet and movable therewith, said index member constituting a means for indicating the position of the ratchet with respect to the normal position of the trip member and said index member and ratchet being manually adjustable, a pawl having teeth adapted respectively to engage the trip member and the ratchet, said teeth being relatively offset so that the one tooth is engaged with the trip member only when the other tooth enters the recess of said ratchet, means for reciprocating the pawl to actuate the trip member and ratchet, means normally operative to prevent a reverse movement of the ratchet with the retractive movement of the pawl, and means for rendering said preventing means inoperative when the tooth of the pawl associated with the trip member engages the latter, whereby subsequent reciprocations of the pawl effect a corresponding joint movement of the trip member and ratchet.

2. In a device of the stated character, the

combination with a normally stationary trip member, of a plurality of ratchets movable relatively to each other and to the trip member and each having a plurality of teeth and a recess in serial arrangement with the teeth, an index member connected with each of said ratchets and movable therewith, said index members constituting a means for indicating the positions of the ratchets with respect to the normal position of the trip member and respectively representing numerical sequences of different orders, and said ratchet and index members being manually adjustable, a pawl having teeth adapted respectively to engage the ratchets and trip member, said teeth being relatively offset so that each tooth can engage its ratchet only when the teeth associated with all of the ratchets of lower order occupy the said recesses of the latter, and so that the associated pawl tooth can engage the trip member only when all of the other teeth occupy the recesses of their respective ratchets, means for reciprocating the pawl to actuate the ratchets and trip member, means normally operative to prevent a reverse movement of the ratchets with the retractive movements of the pawl, and means for rendering said preventing means inoperative when the tooth of the pawl associated with the trip member engages the latter, whereby subsequent reciprocations of the pawl effect a corresponding joint movement of the trip member and the ratchets.

3. In a device of the stated character, the combination with a normally stationary ratchet wheel, of a second relatively rotatable ratchet wheel having a plurality of circumferentially spaced teeth and a recess intermediate an adjoining pair of said teeth, a digit disc connected with the second ratchet and constituting a means for indicating the angular position of the second ratchet with respect to the normal position of the first ratchet, said second ratchet and disc being manually adjustable, a pawl having teeth adapted respectively to engage the said ratchets, said teeth being relatively offset so that the one tooth is engaged with the first named ratchet only when the other tooth enters the recess of the second ratchet, means for reciprocating the pawl to actuate the ratchets, means normally operative to prevent a reverse movement of said second ratchet with the retractive movement of the pawl, and means for rendering said preventing means inoperative when the tooth of the pawl associated with the second ratchet engages the latter, whereby subsequent reciprocations of the pawl effect a corresponding joint oscillation of said ratchets.

SAMUEL J. THACKERAY.