Oct. 13, 1931. R. N. CUNDALL 1,826,926

MACHINE FOR FILLING CONTAINERS

Filed Oct. 23, 1928 4 Sheets-Sheet 1

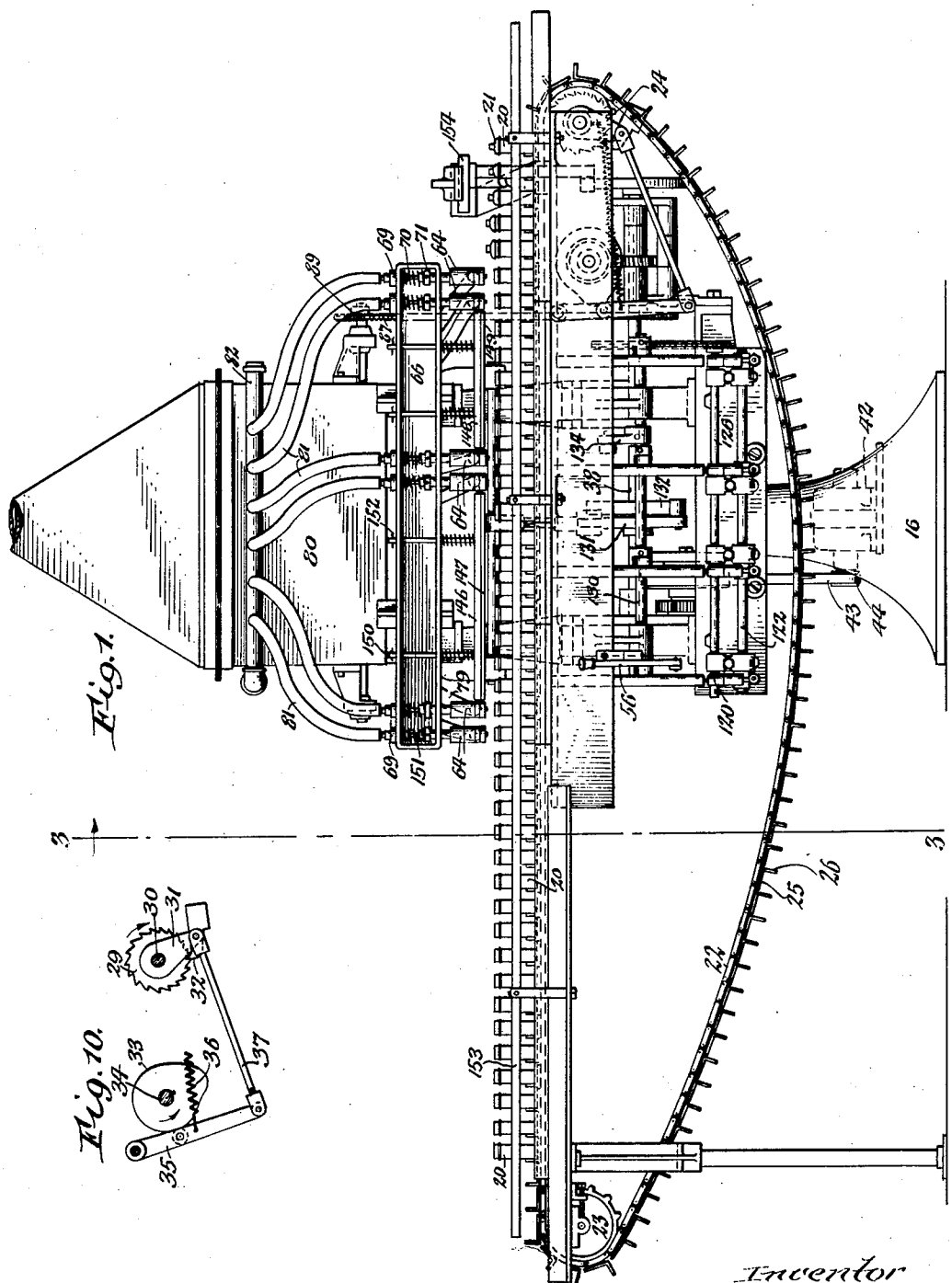

Fig. 1.

Fig. 10.

Inventor
Robert N. Cundall
by Toppo Powers
Attorneys

Oct. 13, 1931. R. N. CUNDALL 1,826,926

MACHINE FOR FILLING CONTAINERS

Filed Oct. 23, 1928 4 Sheets-Sheet 2

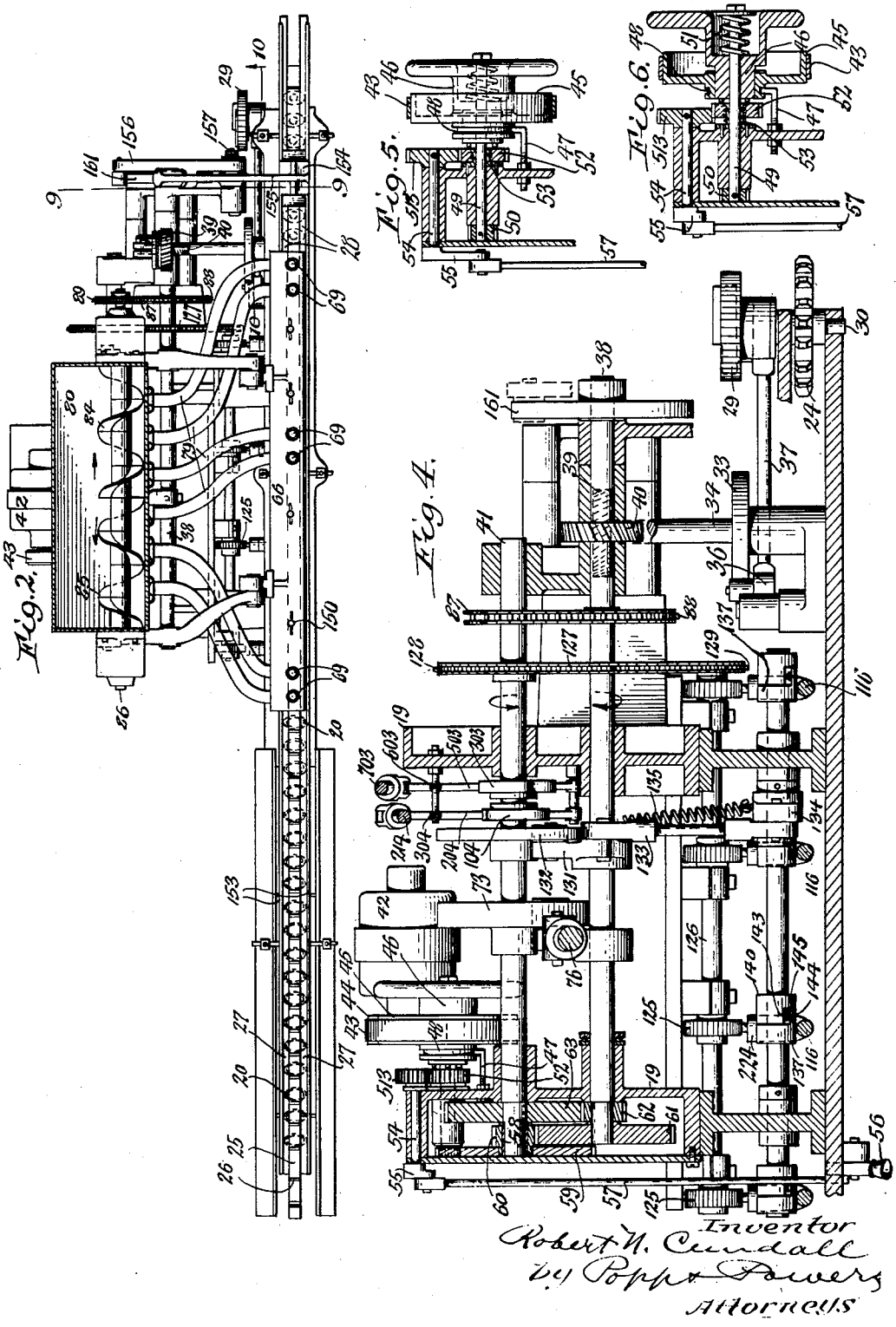

Fig. 2.

Fig. 5.

Fig. 6.

Fig. 4.

Inventor
Robert N. Cundall
by Popp & Powers
Attorneys

Oct. 13, 1931. R. N. CUNDALL 1,826,926

MACHINE FOR FILLING CONTAINERS

Filed Oct. 23, 1928 4 Sheets-Sheet 3

Fig. 1.

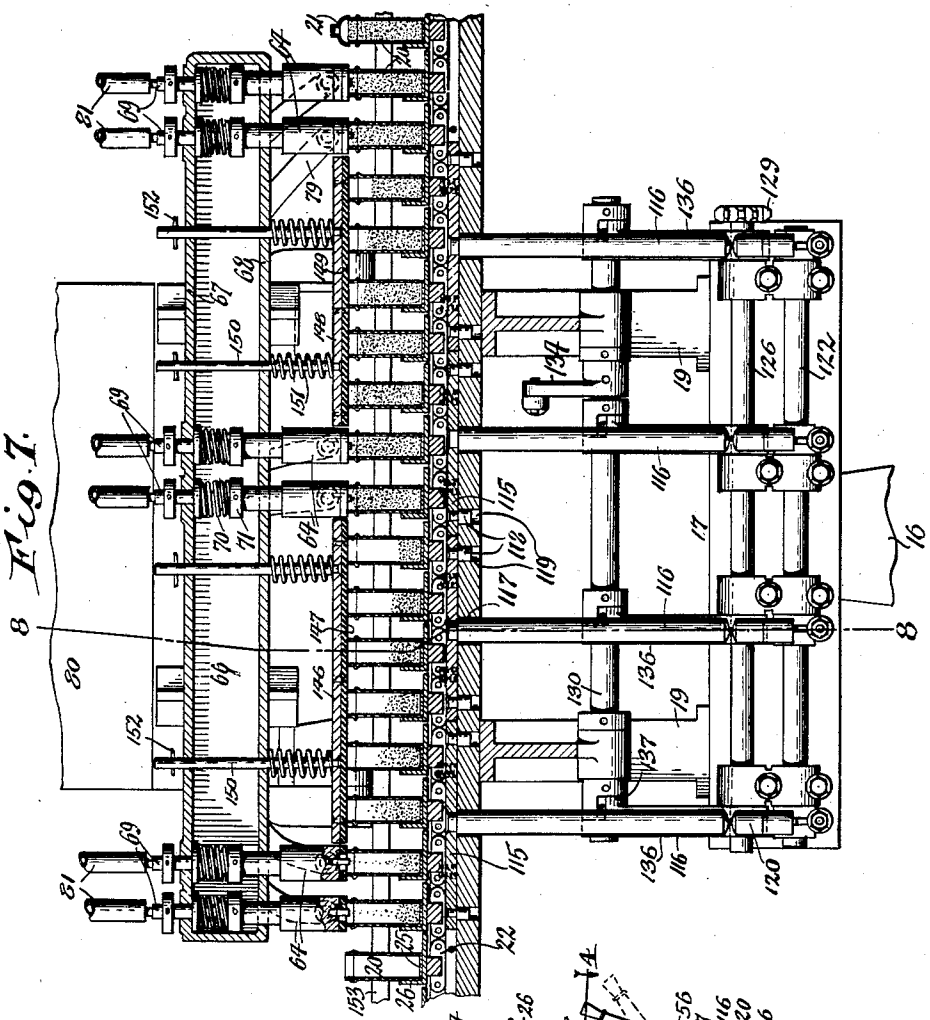

Fig. 3.

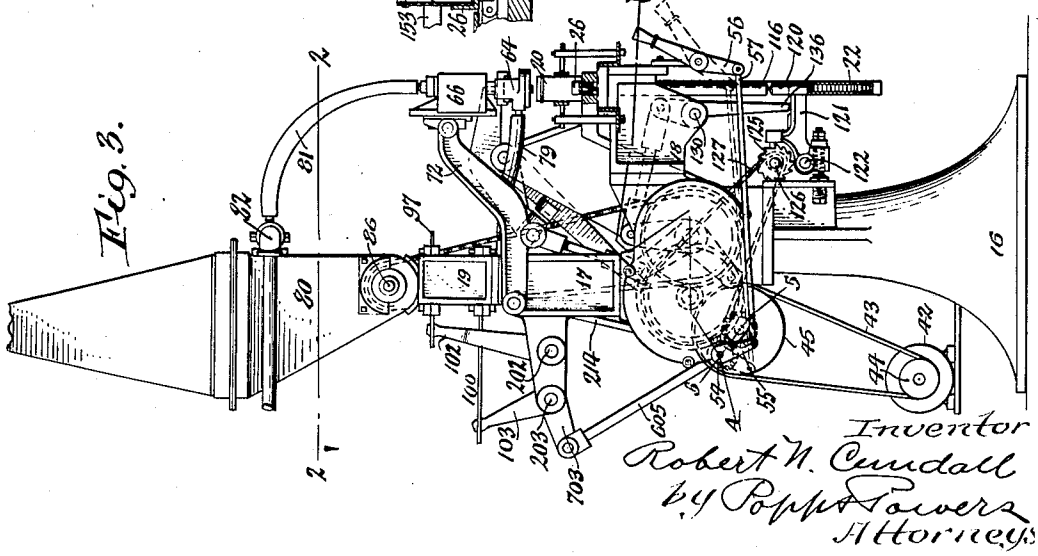

Inventor
Robert N. Cundall
by Popp & Towers
Attorneys

Oct. 13, 1931. R. N. CUNDALL 1,826,926

MACHINE FOR FILLING CONTAINERS

Filed Oct. 23, 1928 4 Sheets-Sheet 4

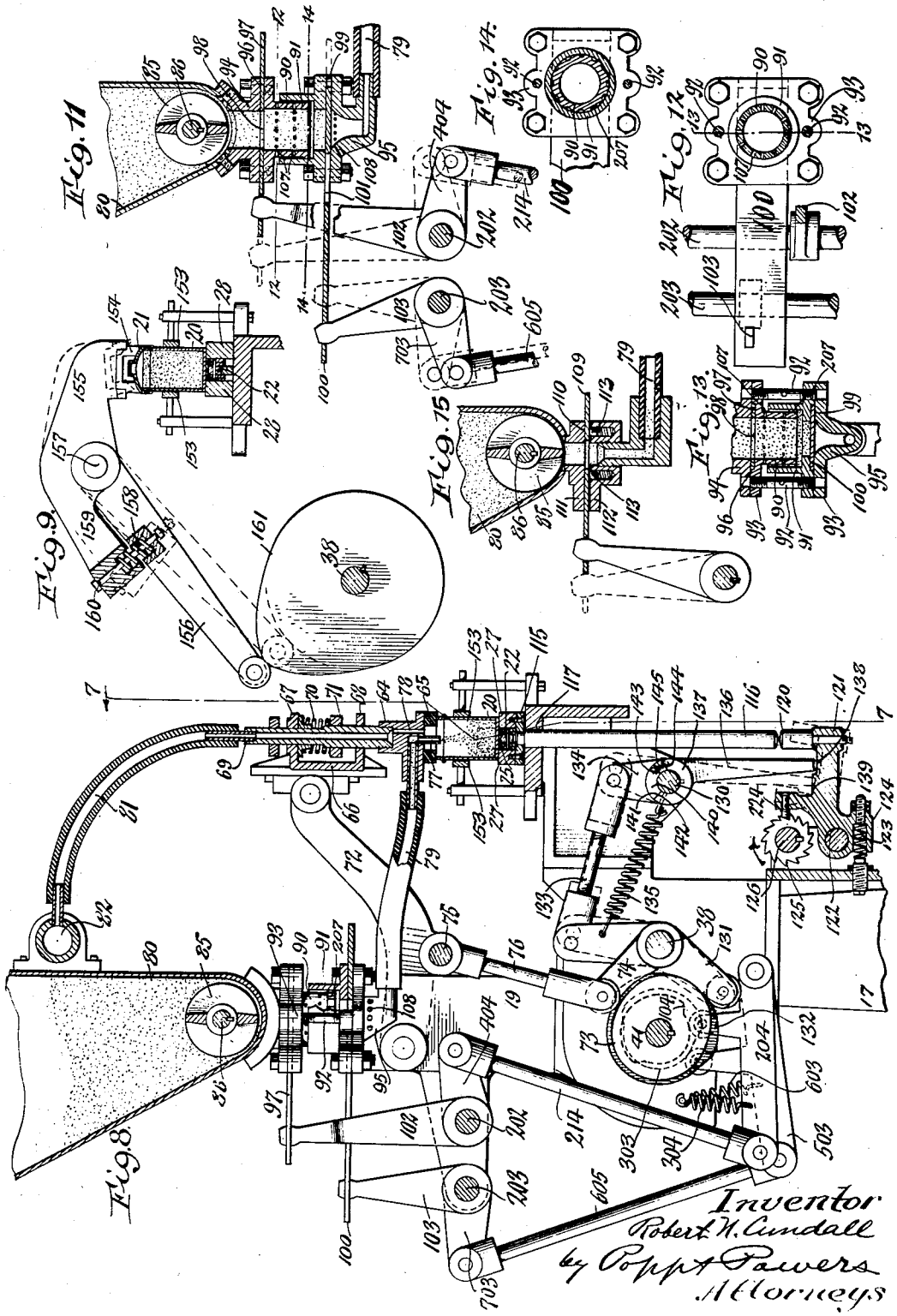

Patented Oct. 13, 1931

1,826,926

UNITED STATES PATENT OFFICE

ROBERT N. CUNDALL, OF BLASDELL, NEW YORK, ASSIGNOR TO THE HOEPNER AUTOMATIC MACHINERY CORPORATION, OF BUFFALO, NEW YORK, A CORPORATION OF NEW YORK

MACHINE FOR FILLING CONTAINERS

Application filed October 23, 1928. Serial No. 314,469.

This invention relates to a machine for filling containers with a powdered material such as talc, baking powder and toilet or medical preparations of powdered form.

It has been found that certain kinds of powdered materials cannot be filled into containers sufficiently rapid by vibrating the same only while the material is flowing into the containers, and in some cases it is necessary to measure the quantity of material which is intended for a certain container.

It is, therefore, one of the objects of this invention to provide means for vibrating the container not only while the same is being filled with the material but also at other times so that the filling of the container may be effected expeditiously and economically.

Another object of this invention is to provide efficient and simple means for accurately measuring the amount of material which is delivered to the containers.

In the accompanying drawings:

Figure 1 is a front elevation of a container filling machine embodying my improvements. Figure 2 is a horizontal section taken on line 2—2, Fig. 3. Figure 3 is an end elevation of the machine viewed from the left hand of the same. Figure 4 is a fragmentary horizontal section, on an enlarged scale, taken on line 4—4, Fig. 3. Figure 5 is a fragmentary horizontal section of the clutch for starting and stopping the operation of the machine and showing the clutch in a closed or coupled position. Figure 6 is a similar view showing the clutch in an open or uncoupled position. Figure 7 is a fragmentary vertical longitudinal section taken on line 7—7, Fig. 8.

Figure 8 is a vertical transverse section taken on line 8—8, Fig. 7. Figure 9 is a fragmentary vertical transverse section taken on line 9—9, Fig. 2. Figure 10 is a fragmentary vertical longitudinal section taken on line 10—10, Fig. 2. Figure 11 is a fragmentary vertical section of the measuring device similar to that shown in Fig. 8 but in a different position. Figure 12 is a horizontal section taken on line 12—12, Fig. 11. Figure 13 is a vertical section taken on line 13—13, Fig. 12. Figure 14 is a horizontal section taken on line 14—14, Fig. 11. Figure 15 is a modified form of the means for controlling the discharge of material from the supply reservoir.

In the following description similar characters of reference indicate like parts in the several figures of the drawings.

The stationary main frame of the machine upon which the working parts are mounted may be of any suitable construction but the same, as shown in the drawings, preferably comprises a pedestal 16, and a base 17 mounted on this pedestal and provided with forwardly projecting front brackets 18 and upwardly projecting rear brackets 19.

The numeral 20 represents the containers which are to be filled with the present machine and which may be of oval form in horizontal section and adapted to be closed at the upper end by a cap 21. These containers are moved past the filling position while mounted on the upper horizontal stretch of a conveyer or feeding belt 22 having the form of a chain and passing with its front and rear turns around front and rear sprocket wheels 23, 24, mounted on opposite ends of the main frame. This feeding belt is provided with a longitudinal row of flights each of which has a base 25 for engaging the bottom of a container and a wing 26 engaging the rear side of the container. The receiving and delivery portions of the conveyer or feed belt pass over tracks 27, 28, and the containers are held against lateral displacement from the feeding belt by rails 153 arranged lengthwise on opposite sides of the tracks and the container filling position.

This feeding belt is moved intermittently so that its upper stretch advances when the filling mechanism is inoperative and at this time feeds containers forwardly to the filling position and while the filling mechanism is in operation the advance of the feeding belt ceases so that the containers remain at rest.

Various means may be employed for automatically operating the feeding belt in this manner, those shown in the drawings being preferred and constructed as follows:

The numeral 29 represents a ratchet wheel which is mounted on the same transverse shaft 30 which carries the delivery sprocket

wheel 24 and 31 represents a ratchet lever turning on the shaft 30 and provided with a pawl 32 mounted on the lever 31 and engaging with the ratchet wheel. A rocking motion is imparted to the ratchet lever by a rotary cam 33 mounted on a shaft 34 and engaging with a cam rock lever 35, a spring 36 for holding the lever 35 in engagement with the cam 33, and a rod 37 connecting this cam lever and ratchet lever.

During each rotation of the cam shaft 34 the feed belt 22 is advanced one step of predetermined length, in this case a distance equal to two containers, and then remains at rest for a period during which the operation of filling the container is performed.

The numeral 38 represents the main driving shaft of the machine which is journaled horizontally and lengthwise in the lower rear part of the main frame and from which motion is transmitted to the cam shaft 34 by a pair of intermeshing spiral gear wheels 39, 40. In the rear of the main shaft is arranged a cam or counter shaft 41 which is journaled on the main frame parallel with the main shaft. The shafts 38 and 41 may be rotated from any suitable source and in any approved manner, for example by the means which are best shown in Figs. 4, 5 and 6 and which are constructed as follows:

The numeral 42 represents an electric motor mounted on the pedestal of the frame and 43 represents a belt passing around a driving pulley 44 on the motor shaft and around a driven pulley 45 which turns on a clutch sleeve 46 but is held against longitudinal movement in any suitable manner, for instance by a stationary finger 47 engaging an annular groove 48 in the hub of the pulley 45. The sleeve 46 is compelled to turn but is capable of sliding lengthwise on an intermediate shaft 49 which latter is provided with a driving pinion 50.

The clutch sleeve 46 is yieldingly held in engagement with the side of the driving pulley 45 by a spring 51 interposed between the clutch sleeve and a shoulder on the intermediate shaft for coupling the clutch and separation of the sleeve 46 from the driving pulley 45 for uncoupling this clutch is effected by a pinion screw nut 52 having its internal screw thread engaging with an externally threaded screw stem 53 secured to an adjacent stationary part of the frame and bearing with its front side against the clutch sleeve 46 so that upon turning the nut 52 in one direction the clutch sleeve 46 will be coupled with the pulley 45 and upon turning the nut 52 in the opposite direction this sleeve and pulley will be uncoupled. Turning of the nut 52 is effected by a gear segment 513 meshing with the pinion nut 52, a rock shaft 54 carrying the pinion 513, a rock arm 55 secured to the rock shaft 54 and a main controlling lever 56 arranged on the front part of the machine and connected by a rod 57 with the rock arm 55, and adapted to be manipulated by the attendant for starting and stopping the machine.

Motion is transmitted from the intermediate clutch shaft 49 to the main shaft 38 by a sleeve 58 turning on the shaft 41 and having a gear wheel 59 meshing with the pinion 50, and also provided with a pinion 60 meshing with a gear wheel 61 on the shaft 38. Motion is imparted to the shaft 41 by a gear pinion 62 secured to the shaft 38 and meshing with a gear wheel 63 on the shaft 41.

The containers 20 are placed with their lower ends or bottoms on bases of the flights at the receiving end of the upper stretch of the feeding belt and are carried by the same in single file forwardly.

The containers are moved forwardly positively by the flights of the conveyer and when the latter comes to rest one or more of the containers are partially filled with material and simultaneously shaken or vibrated so as to settle the same more rapidly and effectively, then the containers are advanced another step without being shaken, but during the following period of rest of the conveyer the containers are again shaken or vibrated further settling the contents. The containers are advanced one or more steps as may be deemed necessary and then presented to the filling means a second time, whereby further material is added to the contents of the partially filled containers and the latter are vibrated at the same time to further settle the material therein. At the end of the following forward step or steps of the containers the same are again shaken but no material is added thereto, and during the next or final filling step the filling of the containers with the powdered material is completed accompanied with practically no vibration. Thereafter the caps are applied to the containers and the same are discharged from the machine ready for shipment.

In the preferred construction the containers are filled in groups of two although this number may be varied as desired. Each forward movement in the present case has therefore been calculated to equal the distance corresponding to two adjacent containers on the feeding belt or conveyer and at each filling station means are provided for introducing some of the powdered material to be packed into each of the containers. The parts of each of these filling devices which co-operate directly with each container are constructed as follows:—

The numeral 64 represents a plurality of vertically movable filling heads or nozzles arranged respectively above the several containers while the latter are at the filling stations, each of these heads being provided at its lower end with a downwardly facing rubber or elastic ring 65 adapted to engage the

upper edge of one of the containers upon lowering the respective head and form an air tight joint therewith when the head is lowered into its operative position.

The several filling heads or nozzles are mounted on a vertically movable yoke 66 which latter is provided with upper and lower flanges 67, 68, in which necks 69 on the upper ends of the heads are capable of sliding vertically. Each of these heads is yieldingly held in its lowermost position on the yoke independently of the other heads by a spring 70 surrounding the respective neck and bearing at its upper end against the underside of the flange 67 while its lower end bears against a collar 71 on the neck, which collar also limits the downward movement of the head by engaging the upper side of the lower yoke flange 68 when the head does not engage a container.

The downward movement of the yoke and the parts mounted thereon is effected by gravity but the upward movement of the same is effected by means which comprises a pair of vertically swinging levers 72 pivoted at their inner and outer ends respectively to the main frame and said yoke, a rotary cam 73 secured to the shaft 41, a cam rock arm 74 turning on the shaft 38 and engaging with the cam 73, and a cross bar 75 connecting the rock levers 72 and connected by a rod 76 with the cam rock arm 74.

Due to this yielding connection between each filling head and the yoke, each of the heads, upon lowering the yoke, will engage its lower end with the respective container independently of the other heads and thereby enable all of the heads to engage the several containers properly notwithstanding that there may be some variation in the height of the containers or in the thickness of the sealing or packing rings 65 or the position of the heads, inasmuch as the spring 70 of each head will be compressed more or less if the respective head engages its container and is arrested in its downward movement before the yoke completes its downward movement.

Each of the filling heads is provided with an inlet passage 77 which extends downwardly therefrom within the neck of the respective container and an outlet passage 78 which opens at the lower end of the head at a point above the lower end of the inlet passage 77. The inlet passage extends to the rear side of the head and is connected by a flexible tube 79 with the lower part of a powder supply bin, hopper or reservoir 80 through the medium of a controlling device. The outlet passage 78 communicates with the neck of the respective head and this neck is connected at its upper end by a flexible tube 81 with a suction manifold 82 mounted on a suitable support such as the front side of the reservoir, as shown in Figs. 1, 2, 3 and 8. This suction manifold is connected with an exhaust pump or other suitable exhausting device so that a vacuum is created within the several filling heads and the conduits and containers communicating therewith.

While the filling heads are elevated and not engaged with containers the suction of the pump on the manifold 82 causes the external air to be drawn into the outlet passages of the heads without producing any effect on the powder in the reservoir. When, however, the heads are engaged with the containers, the suction effect of the pump causes air and powder to be drawn from the supply through the supply pipes or tubes 79 and as this powder issues from the lower end of the inlet passage 77 the same is separated from the air due to the reversed direction of movement which the air is compelled to take in escaping through the outlet passage 78, thereby causing the liberated powder to drop into the containers. When a container has been filled with powder up to the lower end of the inlet passage the continued suction of the pump carries the surplus powder thereafter withdrawn from the supply to a separator which may be of any suitable construction, and enables the by-passed powder to be recovered and eventually returned to the reservoir for filling the same into containers.

The material to be packed may be supplied to the reservoir from any suitable source, for example by a pipe, (not shown) leading to the top of the reservoir for replenishing the material when required.

In the absence of any provision to agitate and distribute the material in the reservoir, the same is liable to become packed and flow unevenly into the several filling heads and to meet this condition an agitating and distributing device is provided consisting preferably of a screw conveyer arranged horizontally and lengthwise in the lower part of the reservoir adjacent to the discharge openings leading to the powder supply tubes. In the preferred construction this conveyer consists of two sections 84, 85, which cover equal parts of the reservoir bottom and trend in opposite directions, preferably from the center of the reservoir toward opposite ends thereof so that the mass of powder supplied to the center of the reservoir will be distributed to the several supply tubes of the filling heads and the material will at the same time be agitated and maintained in a loose and free flowing condition.

The shaft 86 of this conveyer is journaled in bearings on the end walls of the reservoir and the same is rotated by a chain belt 87 passing around sprocket wheels 88, 89, secured respectively to the shaft 38 and the conveyer shaft, as best shown in Figs. 1, 2 and 4.

Between the lower end of the powdered material supply magazine 80 and each supply tube 79 is arranged a controlling device

which is preferably constructed so as to also measure the batches of material which are delivered to successive containers. This form of controlling device is best shown in Figs. 8, 11, 12 and 13, and constructed as follows:

The numerals 90, 91, represent the upper and lower sections of a measuring chamber which telescope one within the other so that the capacity of this chamber may be accurately determined by moving these telescopic sections toward and from each other. This adjustment may be effected in any suitable manner but preferably by two right and left hand screws 92 engaging with threaded openings in flanges 93 on opposite sides of the measuring chamber sections, as shown in Figs. 12 and 13, and adapted when turned one direction or another to separate these sections or bring them together for either increasing or decreasing the capacity of the chamber.

The upper section of the measuring chamber is connected by a hollow top 94 with an outlet in the bottom of the material supply reservoir and the lower section of this chamber is connected by a hollow base 95 with the inlet end of the respective supply tube 79. Between the upper measuring chamber section and the top 94 is formed a horizontal guideway 96 in which an inlet slide valve 97 moves for the purpose of bringing a port 98 in this valve either into or out of register with the passage leading from the reservoir to the measuring chamber and thus permitting flow of material from the reservoir into the measuring chamber or cutting off such flow. A similar guideway 99 is formed between the lower measuring chamber section and the base 95 in which an outlet slide valve 100 moves for bringing a port 101 in this valve either into or out of register with the passage from the measuring chamber to the respective filling head and thus permit the delivery of the contents of this chamber or shutting the same off. The slide valves are actuated so that they are opened alternately, this being preferably accomplished by a pair of elbow levers 102, 103 mounted on rock shafts 202, 203 journaled in bearings on the main frame and having upwardly projecting arms connected respectively with the upper inlet and lower outlet slide valves while their lower arms project forwardly and backwardly, respectively, from their axes.

The rock shaft 202 carries the several elbow levers 102 associated with the inlet valves of the several measuring chambers and is rocked by means which include a cam 104 on the counter shaft 41, a rock lever 204 which is turned in one direction by said cam 104 and in the opposite direction by a spring 304, and a rod 214 connecting the rock lever 204 with a rock arm 404 on the rock shaft 202.

The rock shaft 203 carries the several elbow levers 103 of the outlet valves of the measuring chambers and is rocked by means which include a cam 303 mounted on the counter shaft 41, a rock lever 503 which is turned in one direction by the cam 303, a spring 603 which turns the rock lever 503 in the opposite direction, and a rod 605 which connects the rock lever 503 with a rock arm 703 on the rock shaft 203, as shown in Fig. 8.

During each cycle of operations of the machine the cams 104, 303, make a complete turn and first cause the upper slide valve 97 to open and the lower slide valve 100 to close so that the measuring chamber will become filled with powdered material, and then cause the upper valve 97 to close and the lower valve 100 to open and permit the suction from the manifold on the filling head to draw the measured quantity of material from the measuring chamber to the container.

In order to prevent the formation of a vacuum in the measuring chamber and to permit the material to be promptly and completely withdrawn therefrom when this chamber is cut off from the supply bin and connected with a filling head, the upper section of the measuring chamber is provided with a plurality of vent openings 107 and also with longitudinal vent grooves 207 in the external flange on the lower part of the upper measuring chamber section, which openings and grooves lead to the outer atmosphere.

Similar vent holes 108 leading from the interior of the measuring chamber to the exterior are provided in the upper part of the hollow base which connects the measuring chamber with the respective delivery tube 79 so as to prevent the formation of a vacuum in this part of the supply passage when the lower valve 100 is closed and thus permits of effectively withdrawing any material therefrom at this time.

The mechanism for operating the slide valves 97, 100, is so timed that the measuring chamber connects with the respective container while its filling head is lowered into engagement therewith, but this chamber is only connected with the supply reservoir while the respective filling head is lifted from its container so that filling of the measuring chamber proceeds while the containers are advanced from one place to another by the conveyer.

If the material to be packed into the containers does not require measuring and the same is of a free flowing character the measuring device may be omitted and instead a single slide valve 109 may be employed in a guideway 110 between the upper and lower sections 111, 112 of a valve casing connecting respectively with the supply reservoir and the delivery tube 79 which valve may be held tightly against the upper section 111 by spring pressed balls 113, as shown in Fig. 15, or otherwise to prevent leakage, and this valve may also be actuated

by means which include a rock arm 114 engaging with this valve.

While the containers are located at the filling stations and at points between the same a vibratory or shaking action is imparted to the containers so that the material is settled therein not only while the same is being supplied with material but also while the supplying operation is suspended and the containers are advancing step by step from one filling station to another.

In its preferred form the vibrating or shaking mechanism is constructed as follows:

Arranged underneath the upper stretch of the container feed belt is a vibrating platform consisting preferably of a plurality of longitudinal sections 115 which are arranged end to end and each of which is mounted on the upper end of a vertical vibrating rod 116 which is guided in a suitable way 117 on the adjacent part of the main frame, the sections being held in alinement by retaining pins 118 on the underside thereof engaging with guide openings 119 in the main frame. Hammer blows in rapid succession are delivered against the lower end of each vibrating rod by a hammer head 120 arranged on the front end of a hammer arm 121 which is mounted at its rear end on a supporting rod 122 carried by the frame. Each of these hammer arms is turned in the direction for engaging its head with the respective vibrating rod by a spring 123 interposed between a tail 124 on the underside of this arm and an abutment on the adjacent part of the frame, as shown in Fig. 8. Projecting upwardly from each hammer arm is a trip finger 224 which is adapted to engage a constantly rotating ratchet wheel 125 on the adjacent part of a rotary shaft 126 journaled lengthwise in suitable bearings on the main frame. This shaft is turned by a chain belt 127 passing around sprocket wheels 128, 129, mounted respectively on the counter shaft 41 and the shaft 126, as shown in Fig. 4.

As each ratchet wheel engages its teeth successively with the finger of the companion hammer arm the latter is deflected downwardly and then released so that the resilience of the spring 123 raises the hammer arm and delivers blows in rapid succession and thereby vibrates or shakes the containers so that the material settles therein and thereby permits of more completely and solidly filling the same.

While the containers are in motion and being advanced from one to another the same are preferably not vibrated and means are therefore provided for this purpose which are constructed as follows:

The numeral 130 represents a supporting rock shaft which is journaled lengthwise and horizontally on the main frame above the several hammer arms, this shaft being rocked forwardly and backwardly once during each cycle of operations of the machine by an intermediate rock lever 131 turning on the shaft 38 and engaging its lower arm with a cam 132 on the cam shaft 41 while its upper arm is connected by means of a link 133 with an upwardly projecting rock arm 134 on the rock shaft 130, as best shown in Fig. 8. The lower arm of the rock lever 131 is held in engagement with the periphery of the cam 132 by means of a spring 135 connecting the upper arm of this lever with a collar on the rock shaft 130.

Movably mounted on this rock shaft 130 and depending therefrom are a plurality of detent or holdout pawls or dogs 136, each of which is provided at its upper end with a hub 137 whereby the same is mounted on the shaft 130 while its lower end is adapted to be moved either over a low face 138 or a high face 139 on the upper side of one of the hammer arms 121 which is arranged immediately below the same. Adjacent to the hub 137 of each of the detent pawls is arranged an abutment collar 140 which is secured to the shaft 130 and provided with a rearwardly facing shoulder 141 adapted to engage a forwardly facing shoulder 142 on the hub 137 of the adjacent detent pawl 136. Between a forwardly facing shoulder 143 on the abutment collar 140 and in a backwardly facing shoulder 144 on the hub 137 of the adjacent detent pawl is arranged a spring 145 which tends constantly to hold the shoulder 141 of the abutment collar against the shoulder 142 of the respective detent pawl.

While the containers are at rest at the several filling stations and also at the non-filling zones intermediate of these stations the position of the cam 132 is such that the same operates through the medium of the rock lever 131 and associated parts to turn the rock shaft 130 in the direction for engaging the rearwardly facing shoulders 141 on the several abutment collars with the forwardly facing shoulders 142 of the several detent pawls 136, so that the lower ends of the latter are moved forwardly over the depressed surfaces 138 of the several vibrating hammers, as shown by full lines in Fig. 8. When the parts are in this position each of the hammer arms is free to be thrown by its spring 123 upwardly against the lower end of the respective vibrating rod 116 and also drop with its trip finger 124 from the high to the low parts of the teeth on the periphery of the adjacent ratchet wheel 125, whereby a vibratory or shaking action is imparted to the several containers or cans supported upon the vibrating platforms at the filling stations and intermediate places. As shown in Fig. 8 this vibration is imparted to one of the containers while the upper end of the same is engaged by the respective filling head and powdered

material is being delivered from the supply reservoir into this container.

When the filling heads are lifted from the containers the cam 132 turns the rock shaft 130 in the direction for shifting the detent pawls 136 from a position over the depressed faces 138 of the hammer arms, as shown by full lines in Fig. 8, into a position over the elevated faces 139 of these arms, as shown by dotted lines in the same figure, whereby the hammer arms will be held in the depressed position and prevented from striking the lower ends of the vibrating rods, thereby avoiding vibration or shaking of the containers during the time that the filling heads are out of engagement from the same. While the hammer arms are thus depressed the fingers thereof are moved beyond the path of the teeth on the vibrator ratchet wheels so that the latter rotate idly without influencing the position of the hammer arms. When the filling heads are again engaged with the upper or inlet ends of the containers the cam 132 withdraws the several detent pawls 136 from the high faces 139 on the hammer arms so that the latter are again free to be shifted by their springs 123 into a position in which their heads engage with the lower ends of the vibrating rods and the trip fingers thereof move into the path of the teeth of the ratchet wheels so that vibration or shaking of the containers is resumed.

If the rock shaft 130 should be turned in the direction for moving the detent pawls 136 over the elevated faces 139 of the hammer arms while the latter are in an elevated position the lower end of one or the other of the detent pawls 136 will be held back by the shoulder between the elevated part 139 and the depressed part 138 on the upper face of the respective hammer arm, but as soon as the latter is depressed by the next following tooth of the respective ratchet wheel, the detent pawl 136 will be moved rearwardly over the elevated face 139 of this hammer arm and hold the same in its depressed or inoperative position. This action of each detent pawl 136 is due to the spring 145 interposed between the hub of this detent pawl and the abutment collar 140 which in effect produces a yielding connection between the rock shaft 130 and the respective detent pawl. Disengagement of this detent pawl from the hammer arm is, however, effected positively due to the thrust of the shoulder 141 of the abutment collar 140 against the shoulder 142 on the hub of the detent pawl, and the positive action of the cam 132 which is transmitted to the rock shaft 130. It is, therefore, possible to stop the action of the vibrating mechanism at any time without liability of breaking any of the parts and without necessitating any accurate adjustment in the relative position of the several parts whereby this is accomplished.

In order to prevent any of the material escaping from the several containers which have been partly filled and are being shaken while located in the non-filling zones between the first and second filling stations and between the second and third filling stations, means are provided for closing the upper or inlet ends of the containers or cans at this time. These means, as best shown in Figs. 1 and 7, are constructed as follows:

Arranged lengthwise over the path of the containers between the first and second stations is a closure plate 146 which is provided on its underside with an elastic packing strip or facing 147 such as rubber, and between the second and third stations is arranged a similar closure plate 148 which is also provided on its underside with an elastic strip or facing 149 of rubber or the like. Each of these closure plates is mounted on the adjacent part of the yoke 66 so as to be capable of moving vertically thereon and yieldingly held in their depressed position by means of a plurality of upright guiding and supporting rods 150 slidable vertically in openings formed in the flanges of this yoke and connected at their lower ends with the closure plates 146, 148, respectively, springs 151 surrounding the guide rods 150 and interposed between the upper sides of the closure plates 146, 148 and the underside of the yoke, and stops 152 arranged on the guide rods 150 and adapted to engage with the top of this yoke for the purpose of limiting the downward movement of the closure plates.

Whenever the yoke is raised for elevating the filling heads out of engagement from the upper ends of the containers the stop pins 152 of the guide rods 150 are engaged by the upper side of the yoke and thereby simultaneously lift the closure plates out of the path of the containers which are being advanced by the conveyer or feeding belt. At the end of each forward step of the feeding belt the closure plates are lowered by the yoke simultaneously with the filling heads so that the packing strips 147, 149, on the underside of the closure plates 146, 148 are yieldingly engaged with the upper ends of the containers and the inlets or mouths thereof are closed thereby at the same time that the filling heads are engaged with the containers which are arranged at the filling stations. As a result those containers which are located in the non-filling zones between the filling stations are closed at their upper ends and any powdered material which has been introduced into the containers is prevented from escaping therefrom during the operation of shaking these containers for settling the material therein, while they are not at the filling stations.

After the filling of the material into the containers has been completed at the last

filling station the conveyer or feeding belt advances the containers step by step and finally discharges the same from the delivery end of the feeding belt, but before such discharge the operator first applies a cap 21 to the upper end of each container and then this cap is firmly pressed down upon the container by a power operated pressure device which is located adjacent to the delivery portion of the feeding belt between the final filling station and the delivery sprocket wheel of the feeding belt. In its preferred construction this pressing device as shown in Figs. 1, 2 and 9 is constructed as follows:

The numeral 154 represents a presser jaw movable toward and from the top of each cap on a container as the latter reaches the cap pressing station on the delivery portion of the feeding belt. This presser jaw is actuated by a mechanism which is capable of yielding so as to permit of effectively pressing each cap upon the restrictive container and still avoiding any crushing effect on this cap in case of undue resistance and thereby adapting this pressing device to suit slight variations in the height of the container or cap or differences in the frictional fit of the cap on the container as well as compensating for any inaccuracy in the manufacture of the containers and the caps. In the preferred construction this is accomplished by providing a rock lever having front and rear arms 155, 156 which are mounted on a pivot 157 carried by the main frame, a spring 158 interposed between the rear arm 156 of this lever and a rearwardly projecting bracket 159 on the front arm and operating constantly to separate this rear arm and bracket, and a retaining rod 160 connecting the rear arm 156 and the bracket 159 and serving to limit the expansion of the spring 158. The front arm 155 carries the jaw 154 and the rear arm 156 engages with a cam 161 which is rotated by the shaft 38.

As the filled containers are moved by the feeding belt beyond the last filling station the operator places a cap manually over the upper or inlet end of each container and then the feeding belt carries each container with a cap loosely pressed thereon underneath the presser jaw 154 which at this time is elevated out of the path of the container caps. At the end of each forward step of the feeding belt, and while a container is at rest at the cap pressing station, the jaw 154 descends and engages with the cap 21 of the particular container which rests immediately below the same and exerts a downward pressure against this cap so that the same is forced tightly into its home position over the container preparatory to delivery from the machine. Inasmuch as the feeding belt advances during each step a distance equal to the spacing of two cans or containers the pressure jaw 154 is made wide enough so as to take in two container caps at each of its descending movements, as best shown in Figs. 1 and 2.

During a complete cycle in the operation of this machine the containers are placed by the operator or otherwise on the flights of the feeding belt which latter advances and places two containers at each step in line with the two filling heads at the first filling station and while these containers are being partially filled with material the conveyer or feed belt is at rest. After this pair of containers has been partially filled the same are advanced by successive steps through a primary non-filling zone and then presented to two filling heads at the second filling station where additional material is added to the containers while the same are not being moved by the feed belt. Following the second introduction of material into the containers at the second filling station these containers are again advanced by successive steps through a second non-filling zone and then presented to the last filling station where the containers are held at rest a sufficient length of time to complete the introduction of material into the containers.

After leaving the final filling station the attendant applies caps loosely to the upper ends of the containers and these are pressed firm thereon by the cap pressing mechanism.

While the containers are engaged by the first and second filling stations and also located between the first, second and third stations the same are vibrated or shaken so as to settle the material therein and permit of packing the maximum therein. Escape of dust from these containers located between the several filling stations is prevented by the intermediate closure devices.

This machine permits of expeditiously filling containers with material which is free-flowing and difficult to control in order to pack the correct amount in each container and it also permits of compacting the material so that the containers are no larger than necessary, thereby effecting a substantial economy.

I claim as my invention:

1. A machine for filling containers, comprising a conveyer for propelling containers, a filling device movable toward and from said conveyer and adapted to engage the inlet of a container, a closure arranged adjacent to said filling device and movable toward and from said conveyer and adapted to cover the inlet of the respective container, a vertically movable support, and means for yieldingly mounting said closure on said support.

2. A machine for filling containers, comprising a conveyer for propelling containers, a filling device movable toward and from said conveyer and adapted to engage the inlet of a container, a closure plate arranged over the path of said containers while being

propelled by said conveyer and provided on its underside with an elastic facing adapted to engage with the upper inlet ends of said containers, a vertically movable support, and means for yieldingly mounting said closure plate on said support, comprising a vertical guide rod secured to said plate and sliding on said support, springs interposed between said plate and support and tending to depress the latter, and means for limiting the depression of said plate under the action of said springs.

3. A machine for filling containers, comprising a conveyer for propelling the containers to be filled, means for introducing the material to be packed into the containers, means for vibrating the containers including a platform adapted to engage the underside of the containers, a vertical rod depending from said platform, a vertically swinging hammer adapted to engage said rod, a rotary ratchet wheel adapted to engage said hammer and vibrate the same, and means for controlling the vibration of said hammer, including depressed and elevated faces formed on said hammer, and a detent pawl adapted to be moved over said depressed face to permit the hammer to vibrate and over said elevated face to hold the hammer against vibration.

4. A machine for filling containers, comprising a conveyer for propelling the containers to be filled, means for introducing the material to be packed into the containers, means for vibrating the containers including a platform adapted to engage the underside of the containers, a vertical rod depending from said platform, a vertically swinging hammer adapted to engage said rod, a rotary ratchet wheel adapted to engage said hammer and vibrate the same, and means for controlling the vibration of said hammer, including depressed and elevated faces formed on said hammer, a detent pawl adapted to be moved over said depressed face to permit the hammer to vibrate and over said elevated face to hold the hammer against vibration, a rock shaft on which said pawl is mounted, means for rocking said shaft including a rotary cam, a rock lever engaging said cam, a rock arm mounted on said shaft and connected with said lever, and a yielding connection between said rock shaft and detent pawl.

5. A machine for filling containers, comprising a conveyer for propelling the containers to be filled, means for introducing the material to be packed into the containers, means for vibrating the containers including a platform adapted to engage the underside of the containers, a vertical rod depending from said platform, a vertically swinging hammer adapted to engage said rod, a rotary ratchet wheel adapted to engage said hammer and vibrate the same, and means for controlling the vibration of said hammer, including depressed and elevated faces formed on said hammer, a detent pawl adapted to be moved over said depressed face to permit the hammer to vibrate and over said elevated face to hold the hammer against vibration, a rock shaft on which said pawl is mounted, means for rocking said shaft including a rotary cam, a rock lever engaging said cam, a rock arm mounted on said shaft and connected with said lever, and a yielding connection between said rock shaft and detent pawl, including an abutment collar connected with said shaft and having a rearwardly facing shoulder adapted to engage a forwardly facing shoulder on the detent pawl and also having a forwardly facing shoulder which is opposed to a rearwardly facing shoulder on said detent pawl, and a spring interposed between the forwardly facing shoulder of the abutment collar and the rearwardly facing shoulder of the pawl.

In testimony whereof I affix my signature.

ROBERT N. CUNDALL.