Dec. 30, 1930. O. LOHAUS 1,786,666

MEANS FOR INDICATING CURRENT IMPULSES

Filed Sept. 30, 1926

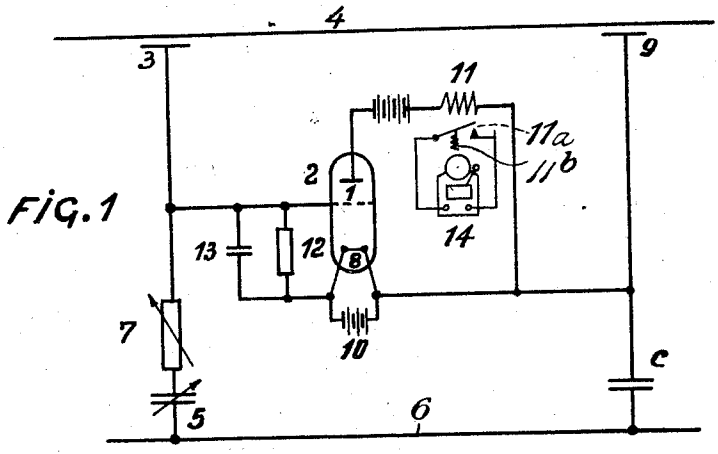

FIG. 1

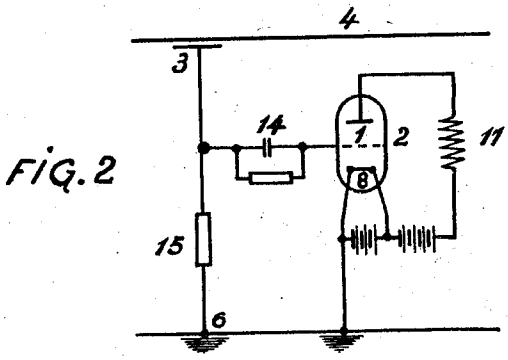

FIG. 2

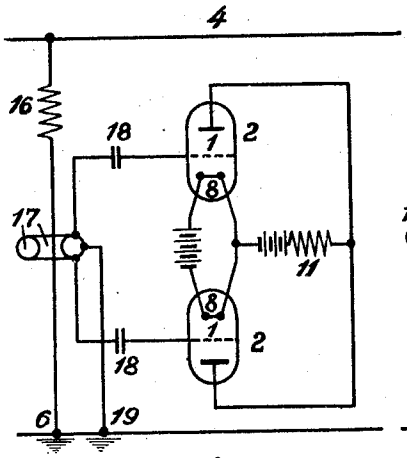

FIG. 3

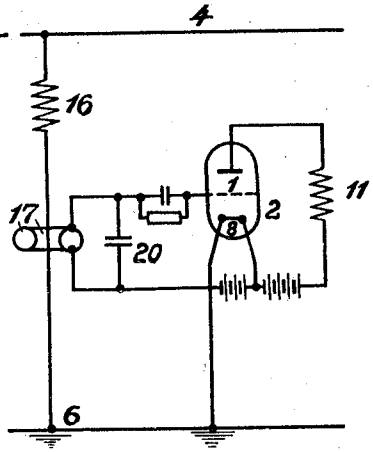

FIG. 4

Inventor
Otto Lohaus
By George A. Prewot Atty.

Patented Dec. 30, 1930 1,786,666

UNITED STATES PATENT OFFICE

OTTO LOHAUS, OF BERLIN-SCHONEBERG, GERMANY, ASSIGNOR TO AKTIENGESELLSCHAFT MIX AND GENEST, OF BERLIN-SCHONEBERG, GERMANY

MEANS FOR INDICATING CURRENT IMPULSES

Application filed September 30, 1926, Serial No. 138,677, and in Germany June 30, 1925.

This invention relates to a system for detecting current impulses of such short duration that electro-magnetic relays of the usual construction are too inert to respond to these impulses.

The present invention provides a system which instead of causing such impulses to react directly upon a relay, causes them to release a flow of electrical energy of longer duration than that of the impulses, that is to say, of sufficient duration to operate the relay or another inert device of this kind.

The said system makes use of electron tubes.

According to this invention there is provided a system for detecing current impulses present in an electrical conductor which comprises means for receiving a momentary current impulse and conveying the same to the grid of an electron tube, the anode circuit of which is arranged to control an indicator and means arranged in the grid circuit so that the momentary impulse received thereby causes a prolonged accumulation of electrons upon the grid which varies the electrical properties of the anode circuit and causes the said indicator to operate for at least a correspondingly prolonged period.

Several embodiments of the present invention are illustrated diagrammatically in the accompanying drawings, in which:—

Figure 1 illustrates a system in which the electron tube is connected at two points to the said conductor.

Figures 2 to 4 illustrate systems in which the electron tube has only one point of connection to this conductor.

Other examples of systems are indicated in the description.

In the construction illustrated in Figure 1, the grid 1 of the electron tube 2 is connected by a capacity 3 to a conductor 4, in which it is desired to detect the presence of current impulses. The grid 1 is also connected by means of a variable condenser 5 with the earth 6. A variable resistance 7 is connected in series with the capacity 3 and the condenser 5. The filament 8 of the electron tube 2 is also connected through a capacity 9 to the conductor 4 and at the same time to the earth 6 by means of the capacity *c*.

A resistance 12 and a condenser 13 are connected in parallel between the filament battery 10 of the cathode 8 and the grid 1. A relay 11 is arranged in the anode circuit of the electron tube 2 and is arranged to control a detector circuit hereinafter described.

When the conductor 4 carries alternating current, the currents which are passed therefrom through the capacities 3 and 9 are equalized by the adjustment of the condenser 5 and the resistance 7 so that no charging of the grid 1 takes place.

With the condenser 5 and the resistance 7 adjusted in the manner described, a steady anode current passes constantly through the electron tube 2 and energizes the relay 11 which is arranged, when so energized, to maintain a contact device 11*a* in the open position so as to break a circuit which when closed is arranged to actuate an electric bell 14. 11*b* designates a suitable spring which normally tends to close the switch 11*a*.

Current impulses, which are transmitted the length of the conductor 4 will first arrive at one of the capacities 3 or 9 and then at the other and so cause a potential difference to be produced between the capacities 3 and 9.

If a negative portion of a current impulse acts upon the grid 1, which thus becomes negatively charged, electrons will not flow from the cathode 8 to the grid as the electrons are themselves negative. If, however, the passage of such a wave along the conductor 4 momentarily influences the grid 1 positively, electrons pass from the cathode 8 to the grid. When the impulse has ceased to influence the grid 1 the accumulation of electrons thereon, which the impulse has caused, remain and constitute a negative charge upon the grid which causes the anode current of the tube 2 to fall so that the relay 11 becomes sufficiently de-energized to permit the contact 11*a* to complete the circuit which is arranged to actuate the bell 14. The contact 11*a* remains closed until the negative charge upon the grid has been gradually equalized over the walls of the electron tube 2 and the resistance 12. The contact 11*a* may, if de-

sired, be arranged to be maintained closed after the relay 11 has been de-energized.

It is to be observed that when the impulse influences the grid positively in the manner described, a momentary increase in the anode current results, but this increase merely enhances the effort of the relay 11 to maintain the contact 11*a* in the open position.

Referring now to the modified system illustrated in Figure 2, the grid 1 of the electron tube 2 is connected through a condenser 14 and a capacity 3 to the conductor 4 which is under observation and through a resistance 15 to the earth 6. The resistance 15 may, for example, be a pure ohmic resistance, a self induction coil, a capacity or any desired combination of such means. A relay 11 is included in the anode circuit as in the system above described with respect to Figure 1.

The capacity of the condenser 3 is arranged to be so small that no effective energy derived from normal currents flowing in the conductor 4 will penerate through the said condenser to the grid 1 of the electron tube 2. The condenser 3 is, however, effectively influenced by impulses.

If, therefore, such a current impulse passes through the conductor 4, a fall of potential occurs at the resistance 15 which acts upon the grid 1 through the condenser 14. If the grid becomes positive through this current impulse, electrons flow from the cathode 8 to the grid, on which they accumulate. These electrons, after the current impulse has taken place, cannot return to the cathode immediately, but the charge, which they form, is equalized slowly over the incompletely insulating glass wall of the electron tube or over a high ohmic resistance connected in circuit between the grid 1 and the cathode 8 such, for example, as the resistance 12 illustrated in Figure 1. The anode current of the tube 2 falls as a result, so that the relay 11 is effectively de-energized as in the system described with reference to Figure 1.

Instead of the capacity or coupling condenser 3 any equivalent means may be used for connecting the grid 1 to the conductor 4.

The resistance 15 is preferably a pure ohmic resistance of a few ohms only.

The systems represented in Figures 3 and 4 are to indicate connections to the earth which may happen to arise for a short time so as to produce a current impulse.

Such earth connections are assumed in Figures 3 and 4 to have taken place, the conductors 4 being joined through a coil 16 to the earth 6. The object of the arrangements shown in Figures 3 and 4 is to indicate these earth connections to which conductors of any plant or device, such as the conductor containing the coil 16, may be subjected.

These conductors 16, 6 (Figures 3 and 4) are each surrounded by a ring coil 17.

In the system disclosed in Figure 3, each of the ends of the coil 17 is connected through a condenser 18 to the grid 1 of an electron tube 2. The two cathodes 8 are included in the same heating circuit. A centre tapping of the coil 17 is connected to earth at 19. This system is an example illustrating the manner in which two electron tubes can be employed, and is arranged to produce a similar effect upon the relay 11 as in the previously described system.

With the arrangement illustrated in Figure 4, the coil 17 is connected to a capacity 20 so as to form an oscillatory circuit. A current impulse which passes through the coil 16 to the earth 6 strikes the oscillatory circuit 17, 20, so that the grid 1 of the electron tube 2 is negatively charged, whether the current impulse flows in the direction 4, 16, 6 or in the opposite direction 6, 16, 4.

Each of these examples causes a short current impulse to release a stream of electrons which are accumulated upon the grid 1 for a sufficient duration to effect the operations of the relay 11 in the manner previously described with reference to Figures 1 to 3.

What I claim and desire to secure by Letters Patent is:—

1. A system for detecting current impulses present in an electrical conductor which comprises means for receiving a momentary current impulse and conveying the same to the grid of an electron tube, the anode circuit of which is arranged to control an indicator, and means arranged in the grid circuit so that the momentary impulse received thereby causes a prolonged accumulation of electrons upon the grid which varies the electrical properties of the anode circuit and causes the said indicator to operate for at least a correspondingly prolonged period.

2. A system for detecting current impulses in an electrical conductor which comprises a capacity arranged adjacent the conductor so as to receive a momentary current impulse and which is connected to the grid of an electron tube the anode circuit of which includes a relay arranged to control an indicator and a resistance connecting the said grid to the cathode of the electron tube so that the momentary current impulse received by the grid causes a prolonged accumulation of electrons upon the grid which effectively de-energizes the said relay and releases the armature thereof to close the indicator circuit for at least a correspondingly prolonged period.

OTTO LOHAUS.