R. C. LEAKE.

SUPPORT FOR OSCILLATABLE MEMBERS.

APPLICATION FILED SEPT. 5, 1911.

**1,071,761.** Patented Sept. 2, 1913.

FIG. II.

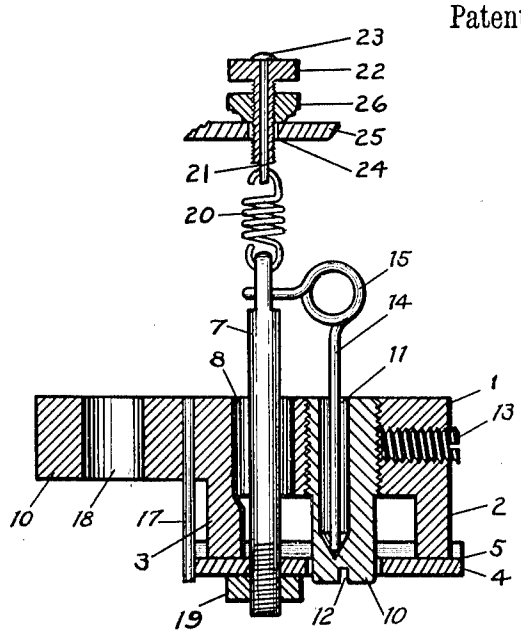


FIG. I.

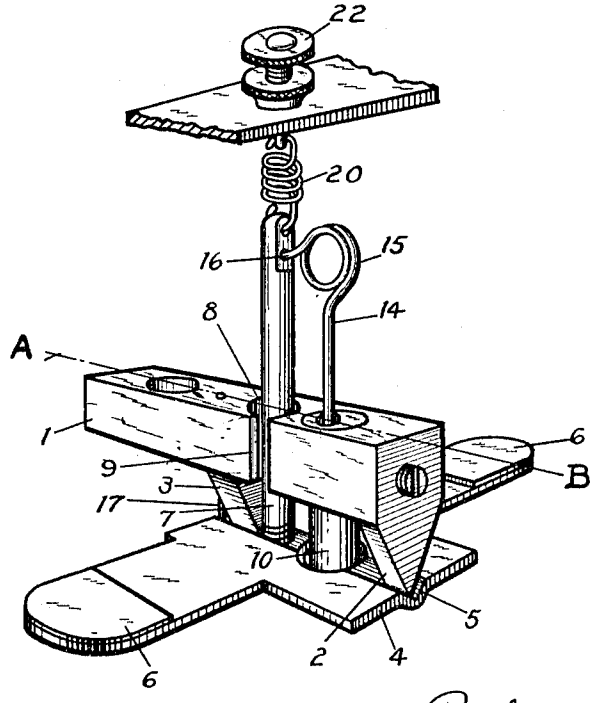


WITNESSES:

George T. Whitney.

Eugene N. Edwards

INVENTOR

Richard C. Leake

BY

Lyman E. Dodge

ATTORNEY

COLUMBIA PLANOGRAPH CO., WASHINGTON, D. C.

# UNITED STATES PATENT OFFICE.

RICHARD C. LEAKE, OF ROCHESTER, NEW YORK, ASSIGNOR TO GENERAL RAILWAY SIGNAL COMPANY, OF GATES, NEW YORK, A CORPORATION OF NEW YORK.

## SUPPORT FOR OSCILLATABLE MEMBERS.

1,071,761. Specification of Letters Patent. Patented Sept. 2, 1913.

Application filed September 5, 1911. Serial No. 647,729.

*To all whom it may concern:*

Be it known that I, RICHARD C. LEAKE, a citizen of the United States, and resident of the city of Rochester, in the county of Monroe and State of New York, have invented a new and useful Support for Oscillatable Members, of which the following is a specification.

This invention relates to a support for an oscillatable member. Such an oscillatable member as herein shown and described would be particularly useful as an armature, as used with electromagnets, although the method of support herein shown and described is applicable generally to any oscillatable member.

The primary object of this invention is to produce a means for supporting an oscillatable member which will be practically devoid of friction, and by which it will be possible to cause the oscillatable member to remain in a central position when not under the influence of any external force, or which will cause the oscillatable member to assume either one of two biased positions.

A further object of the invention is to attain such results by means of easily adjusted parts which may be positively locked in the adjusted position and which will cause the desired results with the greatest certainty.

In describing the invention in detail reference will be had to the accompanying drawing upon which like characters of reference denote like parts and in which:

Figure 1, is a perspective view of the essential elements of the device, and Fig. 2 is a longitudinal section upon the plane indicated by the line A—B of Fig. 1.

1, designates a block having the knife edge projections 2 and 3 against which the oscillatable member 4 formed with V shaped groove 5 is adapted to bear and to oscillate thereon. As herein shown the oscillatable member 4 is in the form of an armature having the residual strip 6 on either end thereof; screw threaded into the oscillatable member 4 is the rod 7 which extends upwardly therefrom passing through the hole 8 in the block 1 and having a nut 19 screw threaded upon its lower end so that it may be firmly clamped to the member 4. The block 1 has a slot 9 in its side passing from the outside face to the hole 8 so that the rod 7 may be entered in the hole 8 by a sidewise movement. Screw threaded into the block 1 is the member 10, having a longitudinal hole 11 therein which extends from the top surface of the member 10 nearly to the other end thereof and having the lower end cone shaped. The hole 11 does not coincide with the longitudinal axis of the member 10 but is placed to one side thereof, so that a rotation of the member 10, by the insertion of a screw driver in the slot 12 causes the hole 11 to rotate about the longitudinal central axis of the member 10. When the member 10 has been moved to a desired position it is held therein by means of the set screw 13.

A member 14 made of spring material and having a coil 15 intermediate its ends, has one end inserted in a hole 16 in the upper end of the rod 7, and then bent at a right angle to prevent displacement, and has the other end pointed and bearing upon the cone shaped bottom of the hole 11, and when in the position shown, exerts a tension upwardly on the rod 7 to retain the attached oscillatable member 4 in contact with the knife edge bearings 2 and 3. The spring member 14 will prevent a forward movement of oscillatable member 4 upon the knife edge bearings 2 and 3 and a pin 17 is inserted in the block 1 and bears against the rear side of the oscillatable member 4 so as to prevent backward movement of the oscillatable member 4 upon the knife edge bearings 2 and 3.

A spring 20 has one end attached to the upper end of the rod 7 and the other end attached to the swivel pin 21, which passes through a hole in adjusting screw 22, having a head 23 to hold it from longitudinal movement downward. The screw 22 passes loosely through a hole 24 in fixed plate 25 and is held in adjusted position by nut 26. By a rotative movement of adjusting screw 22 the tension of spring 20 is adjusted, the construction as described being such that the spring is simply tensioned but not twisted in the slightest degree.

When the rod 7 is in a central position the spring 20 may be so adjusted that practically little tension is exerted by it on rod 7, so that no opposition to the movement of

oscillatable member 4 is encountered until it has made a considerable movement, but after the member 4 is displaced it is caused to return to the central position when the external force is removed.

When the member 10 is moved to a position in which the center of the hole 11 is in line with the longitudinal axis of the member 10 and the longitudinal axis of the rod 7, a tension will be exerted by the member 14 acting through the rod 7 to simply hold the oscillatable member 4 against the knife edge bearings 2 and 3. Any tendency to move the member 4 from a central position will be resisted by the spring member 20 so that the oscillatable member is held resiliently against the knife edges 2 and 3 in a central position when not acted upon by an external force, and after an external force which causes the oscillatable member 4 to move from the central position ceases, the spring member 20 will cause the oscillatable member 4 to return to its central position.

If it is desired to have oscillatable member 4 have a normal bias, the spring 20 is disconnected, the member 10 is rotated so that the central axis of the hole 11 is to the left, as viewed in Fig. 1, of the longitudinal central axis of member 10, then the oscillatable member 4 although resiliently held against the knife edge bearings 2 and 3 will assume a biased position with the right hand end of the member 4 in a lower position than the left hand end of member 4, as viewed in Fig. 1. If any force is used to bring the member 4 to a central position, or beyond the central position, so that the left hand end of member 4 is lower than the right hand end of member 4, the spring member 14 will resist such movement and after the external force has ceased, will return the member 4 to the bias position with the right hand end of the member 4 lower than the left hand end of the member 4.

If the longitudinal central axis of the hole 11 is caused to lie upon the right hand side of the longitudinal central axis of the member 10 by a rotation of the member 10, then the oscillatable member 4 will assume a biased position with the right hand end of the member 4 higher than the left hand end of the member 4 and any external force tending to move the member 4 from such position will be resisted and upon the removal of the external force the spring member 14 will return the member 4 to such biased position with the right hand end of the member 4 higher than the left hand end of the member 4.

The tension with which the member 14 holds the oscillatable member 4 against the knife edge bearings 2 and 3 can be varied at will by either screwing in or screwing out the rotatable member 10, for the highest position that the member 10 can assume and still be locked, will cause the greatest tension to be exerted upon the oscillatable member 4 to hold it against the knife edge bearings, whereas the lowest position to which the rotatable member 10 can be moved and still be locked will cause the least tension to be exerted on the member 4 to hold it against the knife edge bearings 2 and 3 and when it is in either one of the two positions, a half turn of the rotation of the member 10 through 180° will change the bias of the oscillatable member 4 from one position to that of another so that it may be so changed with an exceedingly small change in the tension exerted by the spring 14 and it can be accordingly locked in any adjusted position by means of the said screw 13.

Although adjustment of the tension of the spring member 14 is most easily obtained by a rotation of member 10 and would, perhaps, be perfectly satisfactory in a great majority of cases, there is, however, an undesirable result following from the adjustment of the tension of the member 14 by a considerable displacement of the member 10 from the position shown in Fig. 2, which results from the fact that any considerable rotation of the member 10 from the position shown causes the bottom of the hole 11 to either rise or fall below a line coinciding with the bottom of the knife edge bearings 2 and 3. When the bottom of the hole 11 coincides exactly with a line drawn from the bottom of one knife edge bearing 2 to the bottom of the other knife edge bearing 3, the oscillation of the member 4 upon the knife edge bearings is practically without friction, for, under such conditions all moving parts are merely oscillating upon a point or an edge and the tension exerted by spring member 14 remains the same at all points of displacement of the member 4. If the bottom of the hole 11, is, however, either above or below a line drawn along the bottom edges of knife edges 2 and 3 although all movable parts still oscillate upon a point or a series of points which are in line, the tension exerted by the spring member 14 will vary along the different portions of the travel of oscillatable member 4. In order to obviate this defect, the member 10 may be used merely to change the bias of the oscillatable member 4, but the tension of the spring member 14 may be adjusted by raising or lowering the rod 7, for by so doing, the bottom of the hole 11 can then be retained so that it practically coincides in all positions with a line drawn from the bottom of one knife edge 2 to the bottom of the other knife edge 3.

When it is desired to have the member 4

normally assume a central position, if little or no tension is exerted by spring 20 when the member 4 is at or near central position, the member 4 may not exactly assume central position when no external force is acting upon it, due to difference in weight of the parts on each side of the knife edge bearing. In such case it may be brought to a true central position when at rest by a slight adjustment of member 10.

It will thus be seen that applicant has devised a support for an oscillatable member which is practically devoid of friction and which allows the oscillatable member when not acted upon by an external force to lie normally either in a central position or to have a bias to either one of its two extreme positions, and which furthermore will return automatically to normal position as soon as the external force which displaces it is removed.

Although the method of supporting and adjusting and causing a bias to an oscillatable member as herein shown and described is generally applicable to any member which it is desired to so support, it is particularly useful when applied to the armatures as used in electromagnets and more especially valuable when used as a support for what is known in the art as a polarized armature.

When the oscillatable member 4 as herein shown, is used as an armature, the residual strip 6 may be attached thereto to prevent the member 4 from sticking to the poles of the electromagnet by means of the residual magnetism therein.

The oscillatable member 4 having a portion on either side of the knife edge bearings 2 and 3, is adapted to coöperate with the pole of electromagnet on either side of the knife edge bearing. As the knife edge bearing is in direct metallic contact with the oscillatable member, it also furnishes an extremely efficient means for connecting the oscillatable member with a permanent magnet thereby causing the oscillatable member 4 to be polarized as would be necessary if the oscillatable member 4 was used as a polarized armature. In such case the permanent magnet could be attached to the block 1 by means of a screw passing through the hole 18.

Although applicant has herein shown and described his oscillatable member as having an operable part on each side of the knife edge bearing, it is to be understood that the means of support herein shown and described are equally applicable if an operative part lies only upon one side of the knife edge bearings 2 and 3, thus making the oscillatable member 4 capable of operating in connection, for instance, with one pole only of an electromagnet.

Having thus explained the principle of my invention and described one specific embodiment thereof, what I claim as new and desire to secure by Letters Patent, is:

1. A knife edge bearing, an oscillatable member and means to resiliently support the oscillatable member against the knife edge bearing, said means oscillatable with the oscillatable member about a line through the extremity of the knife edge.

2. A knife edge bearing, an oscillatable member, and means to cause a normal bias in the oscillatable member and to support the same against the knife edge bearing, said means oscillatable with the oscillatable member about the same axis.

3. A knife edge bearing, an oscillatable member, means to adjustably resiliently support the oscillatable member against the knife edge bearing, said means oscillatable with the oscillatable member about the same axis.

4. A knife edge bearing, an oscillatable member, a spring member, one end of said spring member connected to said oscillatable member, a member adjustably connected to said bearing formed with an eccentric cone shaped cavity therein, the other end of said spring member resting in said cavity.

5. A knife edge bearing, an oscillatable member, a spring member, one end of said spring member connected to said oscillatable member, a member adjustably connected to said bearing formed with an eccentric cone shaped cavity therein, the other end of said spring member resting in said cavity and means for securing said adjustably connected member in adjusted position.

6. A knife edge bearing, an oscillatable member, means to support the oscillatable member against the bearing and cause a normal bias in the oscillatable member, and means adapted for increasing or decreasing the force of the bias, said first said means oscillatable with the oscillatable member about substantially the same axis.

7. A member having a knife edge formed thereon, an oscillatable member in contact with the knife edge, a supporting member resting upon the first said member in a line with said knife edge and connected to the oscillatable member, and means for adjusting the point of support of said supporting member relatively to said knife edge.

8. A member having a knife edge formed thereon, an oscillatable member adapted to bear against the knife edge, a rod connected to the oscillatable member, an adjustable member connected to the first said member, and a resilient connection between the said adjustable member and the said rod.

9. A member having a knife edge formed thereon, an oscillatable member adapted to bear against the knife edge, a rod adjustably connected to the oscillatable member, an adjustable member connected to the first said

member, and a resilient connection between the said adjustable member and the said adjustable rod.

10. A member having a knife edge formed thereon, an oscillatable member in contact with the knife edge, a member having a cone shaped cavity adjustably connected with the knife edge bearing member, and means resting in the cavity and connected to the oscillatable member for supporting the oscillatable member.

RICHARD C. LEAKE.

Witnesses:
LILLIAN L. PHILLIPS,
MARY G. DALBEY.

Copies of this patent may be obtained for five cents each, by addressing the "Commissioner of Patents, Washington, D. C."