J. F. TOWNSEND.

FUEL FEEDER FOR PULVERIZED FUEL.

APPLICATION FILED MAY 15, 1919.

1,321,262.

Patented Nov. 11, 1919.

2 SHEETS—SHEET 1.

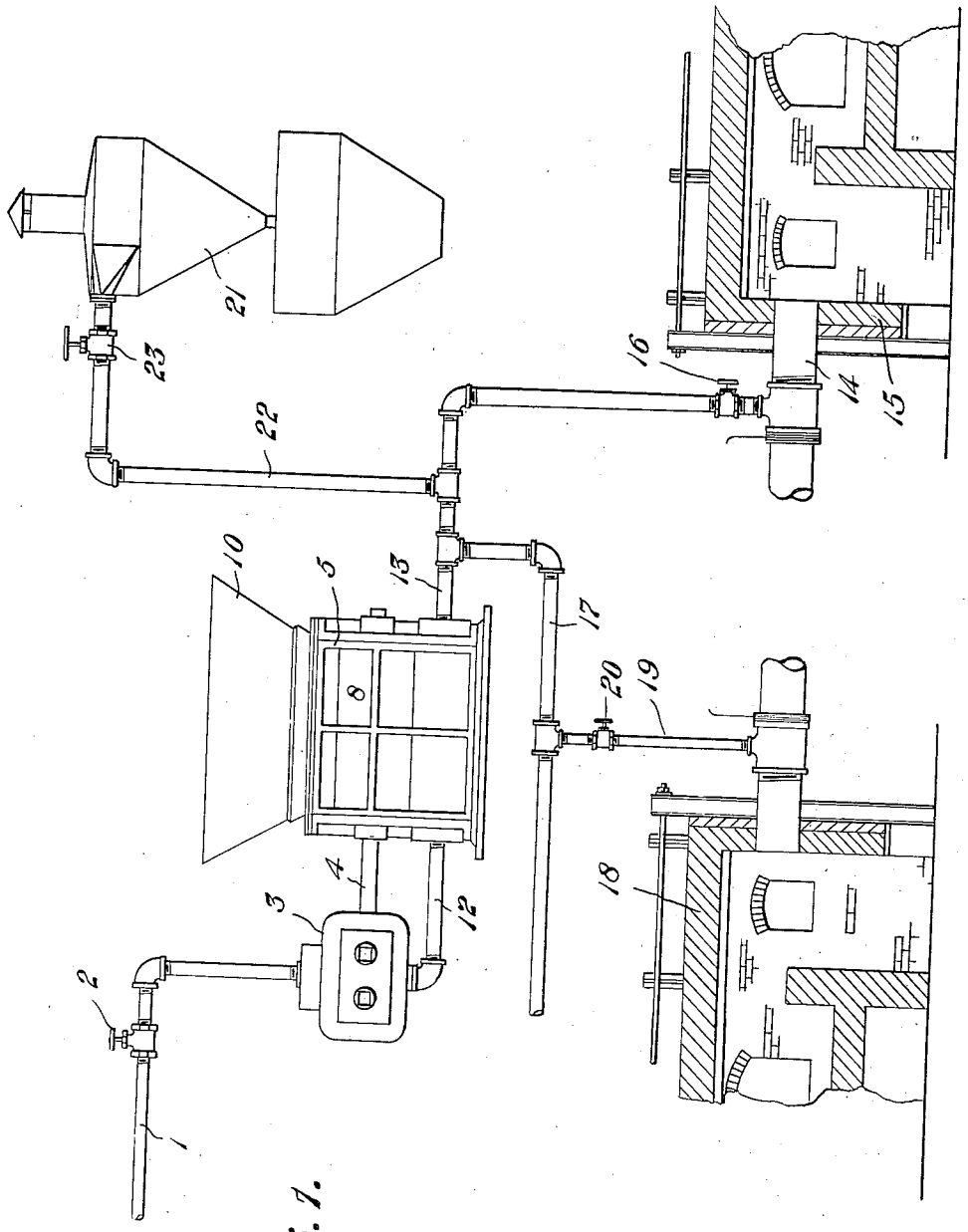

Fig. 1.

INVENTOR

Joseph F. Townsend.

Frease, Merkel, Sayrall & Boud

ATTORNEYS

J. F. TOWNSEND.

FUEL FEEDER FOR PULVERIZED FUEL.

APPLICATION FILED MAY 15, 1919.

1,321,262.

Patented Nov. 11, 1919.

2 SHEETS—SHEET 2.

Fig. 2.

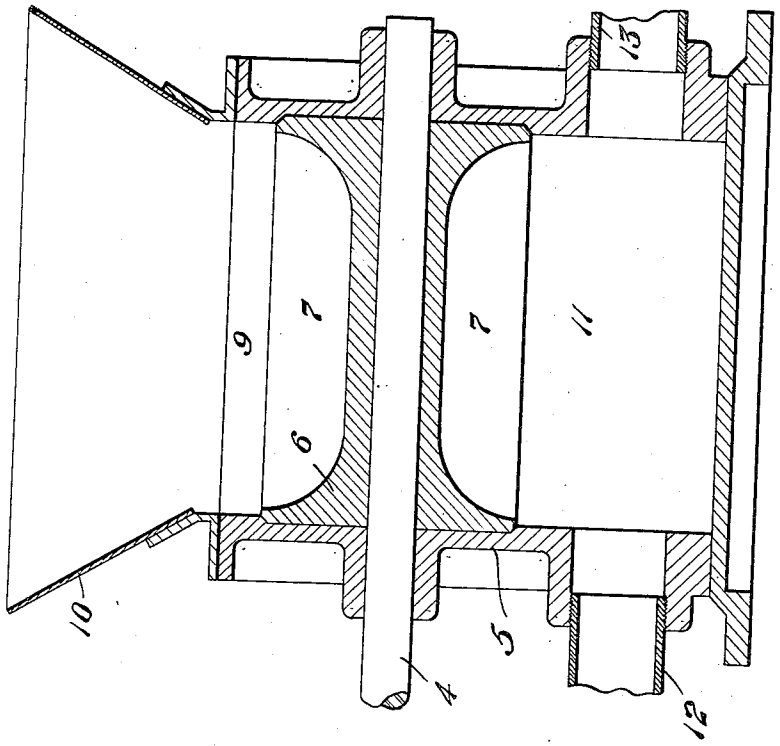

Fig. 3.

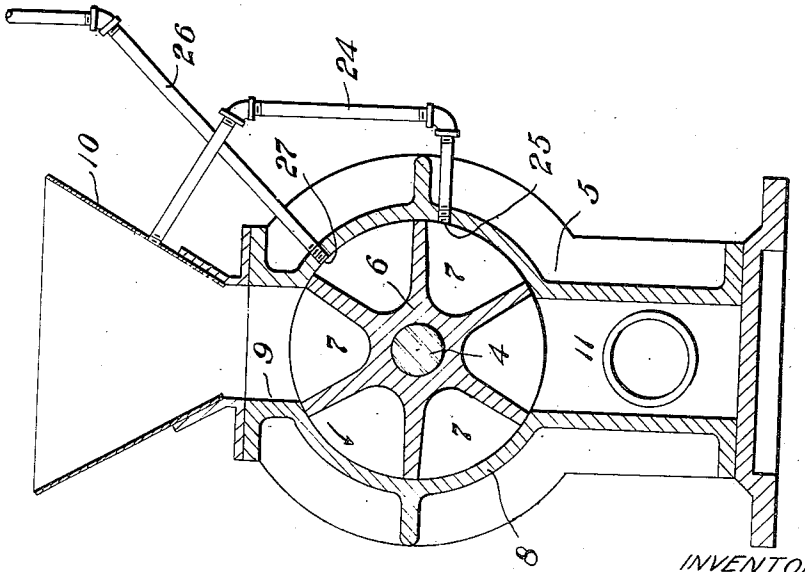

INVENTOR.

Joseph F. Townsend.

Frease, Merkel, Sayrell & Bond

ATTORNEYS.

UNITED STATES PATENT OFFICE.

JOSEPH F. TOWNSEND, OF CANTON, OHIO.

FUEL-FEEDER FOR PULVERIZED FUEL.

1,321,262. Specification of Letters Patent. Patented Nov. 11, 1919.

Application filed May 15, 1919. Serial No. 297,388.

To all whom it may concern:

Be it known that I, JOSEPH F. TOWNSEND, a citizen of the United States, residing at Canton, in the county of Stark and State of Ohio, have invented a new and useful Fuel-Feeder for Pulverized Fuel, of which the following is a specification.

The invention relates to fuel feeders for feeding pulverized fuel to furnaces and more especially to a device by means of which the pulverized fuel is carried to the furnace by means of an air blast.

The objects of the invention are to provide a feeder for pulverized fuel operated by an air motor which is controlled by the same air blast that carries the pulverized fuel from the feeder to the furnace.

A further object is the provision of means whereby the speed of the motor is controlled by the pressure of the air blast through the feeder.

A still further object is the provision of a fuel feeder of the character referred to by which a plurality of furnaces may be fed from the same feeder.

A further object is the provision of a feeder comprising a cylindrical distributer provided with a plurality of feed receiving, longitudinally disposed, pockets and an air blast passing longtiudinally through said feeder.

With these objects in view the invention consists in the novel construction and arrangement of parts, hereinafter described, illustrated in the accompanying drawings, and particularly pointed out in the appended claims, it being understood that various changes in the form, proportions, size and minor details of construction may be made within the scope of the appended claims, without departing from the spirit or sacrificing any of the advantages of the invention.

The invention relates to a method of injecting pulverized coal by the application of a rotary air trap into a blast or pressure of air for the purpose of transporting or distibuting the coal and obtaining a constant mixture of pulverized coal and air, by first leading the air used for transportation through an air motor which rotates the air tap.

From the receiver the air passes into a rotating or reciprocating air motor the exhaust of which enters the air trap through a check valve.

Various means are possible to secure a mixing at this point the simplest method no doubt, would be to maintain a low velocity. As each bucket of the spider has passed the point of discharge, the entrapped compressed air will be discharged into a pipe that leads into the bin near the point of feed. This serves as an agitator and will prevent bridging. It is quite evident that the mixture will be of constant ratio and that the amount conveyed can be regulated by the valve at the discharge end.

The invention thus set forth in general terms is illustrated in the accompanying drawings forming part hereof, in which—

Figure 1 is a diagrammatic view showing the feeder arranged to feed the pulverized fuel to a plurality of furnaces and to a reservoir or bin.

Fig. 2 is a longitudinal sectional view through the feeder.

Fig. 3 is a transverse sectional view through the feeder.

A practical embodiment of the invention is disclosed in the accompanying drawings, forming a part of this specification in which similar numerals of reference indicate corresponding parts throughout the several views.

The pipe 1 is connected to some suitable source of air pressure, either a blower or a compressed air tank and is provided with a shut-off valve 2 intermediate the air supply, and the air motor 3 which may be of any approved type of rotary air motor, the shaft 4 of which extends into the housing 5 of the feeder and has mounted thereon the cylindrical distributer 6.

The cylindrical distributer is provided with a plurality of longitudinally disposed feed receiving pockets 7 rotates within the cylindrical portion 8 of the housing This cylindrical portion of the housing is provided at the top with the longitudinal feed passage 9 of substantially the same dimensions as each of the feed receiving pockets 7 and a hopper 10 communicates with this passage.

A similar passage 11 of greater height than the passage 9 communicates with the under side of the cylindrical portion 8. An air pipe 12 forms a communication between the air motor 3 and the passage 11 and carries the exhaust air from the motor into this passage.

A pipe 13 is connected to the opposite ex-

tremity of the passage 11, in alinement with the pipe 12 and is adapted to receive the powdered fuel forced out of the passage 11 by the air blast, this pipe communicating with the furnace or reservoir to which it is desired to carry the powdered fuel. As shown in Fig. 1 this pipe leads to the enlarged pipe 14 which communicates with the fire box of the furnace 15. A control valve 16 is provided in this pipe at a point near the furnace.

A pipe 17 communicates with the pipe 13 and is arranged to supply one or more furnaces 18 by means of communicating pipes 19, each of said pipes being provided with a valve 20. A reservoir is indicated at 21 and is connected to the pipe 13 by means of the feed pipe 22 having a valve 23 located therein.

A pipe 24 communicates with the cylindrical portion 8 of the feeder housing at the point 25 and with the hopper 10 for the purpose of allowing any pressure of air remaining in the feed receiving pocket which has just emptied to escape into the hopper in order that each feed receiving pocket may be reduced to atmospheric pressure before it registers with the feed passage 9 and tending to agitate the pulverized fuel contained in the hopper. Another pipe 26 communicates with the cylindrical portion of the housing at the point 27 and exhausts into the outer air in order that the air may be displaced from each pocket as the pulverized fuel is received in the pocket, thus assuring the filling of each pocket with fuel.

The operation of the feeding device constructed as above described will be easily understood. The hopper 10 is filled with pulverized fuel and the valve 2 is opened allowing the compressed air to pass through the pipe 1 operating the motor 3, rotating the cylindrical distributer 6 in the direction of the arrow shown in Fig. 3. As each pocket 7 passes the feed passage 9 it receives a portion of the pulverized fuel from the hopper and as each pocket thus filled passes the passage 11 the pulverized fuel contained therein is dropped into the passage and into the air blast passing from the pipe 12 to the pipe 13, thus carrying the pulverized fuel into the pipe 13 and from there to the several distributing pipes connected with the furnace and the fuel reservoir 21.

When it is desired to decrease the amount of fuel being fed to any one furnace, the control valve in the distributing pipe to that furnace is partially closed, thus allowing a smaller portion of fuel to be fed to that particular furnace and at the same time reducing the air pressure to that particular furnace, which in turn reduces the air pressure from the pipe 1 and through the air motor to the same extent. This it will be seen does not affect the air pressure through the other distributing pipes to the other furnaces or the reservoir, the motor being slowed proportionately to allow for the decrease of air pressure to the furnace which is partially cut off. Any or all of the furnaces may be entirely shut off if desired, thus decreasing the air pressure and slowing up the air motor in proportion and it will be seen that by shutting off the control valves in the distributing pipes in all of the furnaces the motor will naturally be entirely stopped. As the cylindrical distributer 6 is arranged to have an air tight fitting within the cylindrical portion 8 of the housing there will be no leakage of air through the distributer when all of the valves to the distributing pipes are closed, thereby preventing any rotation of the air motor.

By locating the air blast from the pipe 12 to the pipe 13 through the passage 11 longitudinally of the feeding device all of the pulverized fuel as it is dropped from each longitudinal feed receiving pocket in the rotating cylinder is more easily taken up and carried away by the air blast thus effecting a maximum of operation of the device.

I claim:

1. A feeding system for feeding pulverized fuel, including a horizontally disposed cylindrical housing having inlet and discharge passages therein, a distributer rotatably mounted within said housing and having longitudinal feed receiving pockets located therein and arranged to register successively with the inlet and discharge openings and means for producing an air blast longitudinally through the discharge passage and means for reducing the air blast through the discharge passage and automatically decreasing the speed of the distributer in proportion.

2. A feeding system for feeding pulverized fuel, including a horizontally disposed cylindrical housing having inlet and discharge passages therein, a distributer rotatably mounted within said housing and having longitudinal feed receiving pockets located therein and arranged to register successively with the inlet and discharge openings, an air motor for rotating said distributer and means for passing the exhaust air from said motor longitudinally through the discharge passage.

3. A feeding system for feeding pulverized fuel, including a horizontally disposed cylindrical housing having inlet and discharge passages therein, a distributer rotatably mounted within said housing and having longitudinal feed receiving pockets located therein and arranged to register successively with the inlet and discharge openings, an air motor for rotating said distributer and means for passing the exhaust air from said motor longitudinally through the discharge passage, and means for reduc-

ing the air blast through the discharge passage and automatically decreasing the speed of the motor in proportion.

4. A feeding system for feeding pulverized fuel, including a horizontally disposed cylindrical housing having inlet and discharge passages therein, a distributer rotatably mounted within said housing and having longitudinal feed receiving pockets located therein and arranged to register successively with the inlet and discharge openings, an air motor for rotating said distributer and means for passing the exhaust air from said motor longitudinally through the discharge passage, a fuel conveying pipe connected to said discharge passage and a valve in said pipe for controlling the amount of fuel passing through said pipe and automatically controlling the speed of the motor in proportion.

5. A feeding system for feeding pulverized fuel, including a horizontally disposed cylindrical housing having inlet and discharge passages therein, a distributer rotatably mounted within said housing and having longitudinal feed receiving pockets located therein and arranged to register successively with the inlet and discharge openings, an air motor for rotating said distributer and means for passing the exhaust air from said motor longitudinally through the discharge passage, a fuel conveying pipe connected to said discharge, a plurality of distributing pipes connected to said fuel conveying pipe and valves in said distributing pipes for controlling the amount of fuel passing through each distributing pipe and controlling the speed of the motor in proportion.

6. A feeding system for feeding pulverized fuel comprising a horizontally disposed cylindrical drum having inlet and discharge passages therein, a hopper communicating with the inlet opening, a distributer rotatably mounted within the cylindrical housing and having feed receiving pockets located therein and designed to register successively with the inlet and discharge passages, means for passing an air blast through the discharge passage and means for conducting exhaust air from each pocket to the hopper after the pocket passes the discharge passage for the purpose of agitating the fuel within the hopper.

7. A feeding system for feeding pulverized fuel comprising a horizontally disposed cylindrical housing having inlet and discharge passages therein, a hopper communicating with the inlet opening, a distributer rotatably mounted within the cylindrical housing and having feed receiving pockets located therein and designed to register successively with the inlet and discharge passages, means for passing an air blast through the discharge passage and means for conducting exhaust air from each pocket to the hopper after the pocket passes the discharge passage for the purpose of agitating the fuel within the hopper, and means for conducting exhaust air from each pocket to the outer atmosphere before the pocket reaches the inlet opening.

8. A feeding system for feeding pulverized fuel, including a horizontally disposed cylindrical housing having inlet and discharge passages therein, a distributer rotatably mounted within said housing and having longitudinal feed receiving pockets located therein and arranged to register successively with the inlet and discharge openings, an air motor for rotating the distributer, means for passing air under pressure longitudinally through the discharge passage and means for reducing the air blast through the discharge passage and automatically decreasing the speed of the motor in proportion.

In testimony that I claim the above, I have hereunto subscribed my name.

JOSEPH F. TOWNSEND.