G. B. SMITH.

WIRE TWISTING MACHINE.

APPLICATION FILED JULY 23, 1914.

1,165,550.

Patented Dec. 28, 1915.

4 SHEETS—SHEET 1.

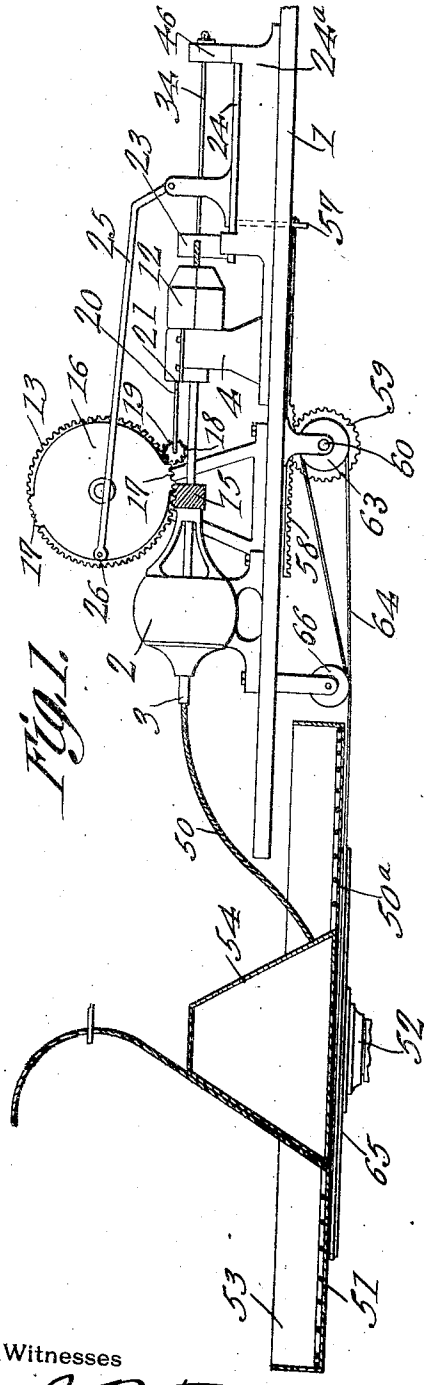

Fig. 1.

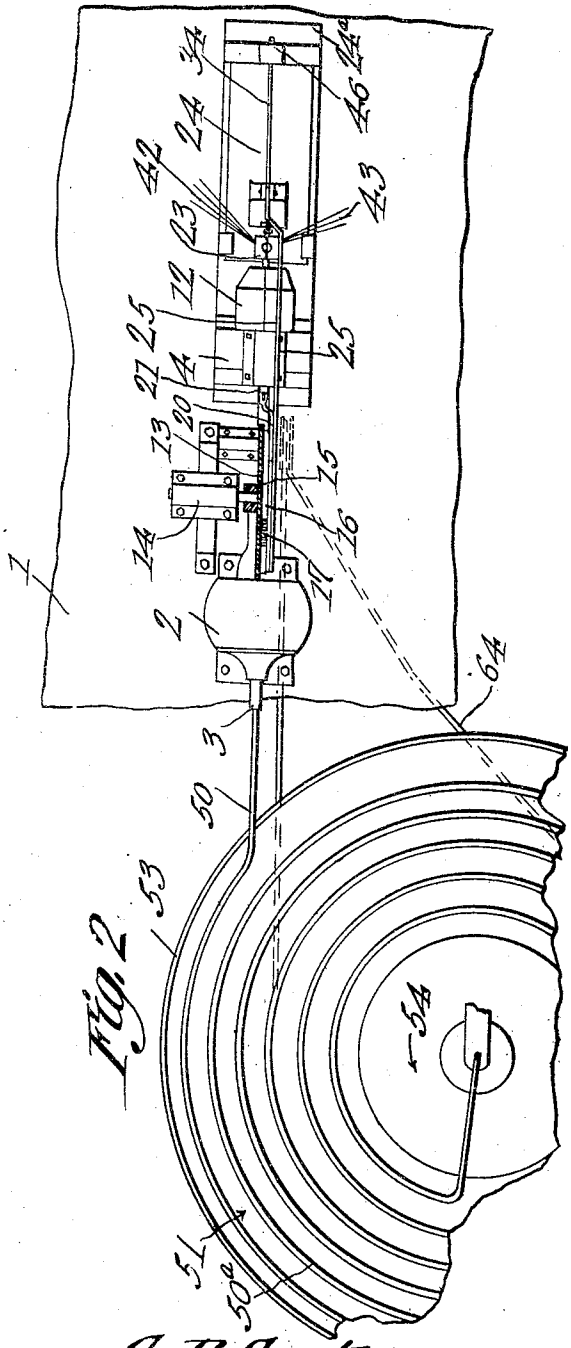

Fig. 2.

Witnesses

J. R. Toulin

Marian Moore

G. B. Smith, Inventor

by C. A. Snow & Co.

Attorneys

G. B. SMITH.

WIRE TWISTING MACHINE.

APPLICATION FILED JULY 23, 1914.

1,165,550.

Patented Dec. 28, 1915.

4 SHEETS—SHEET 2.

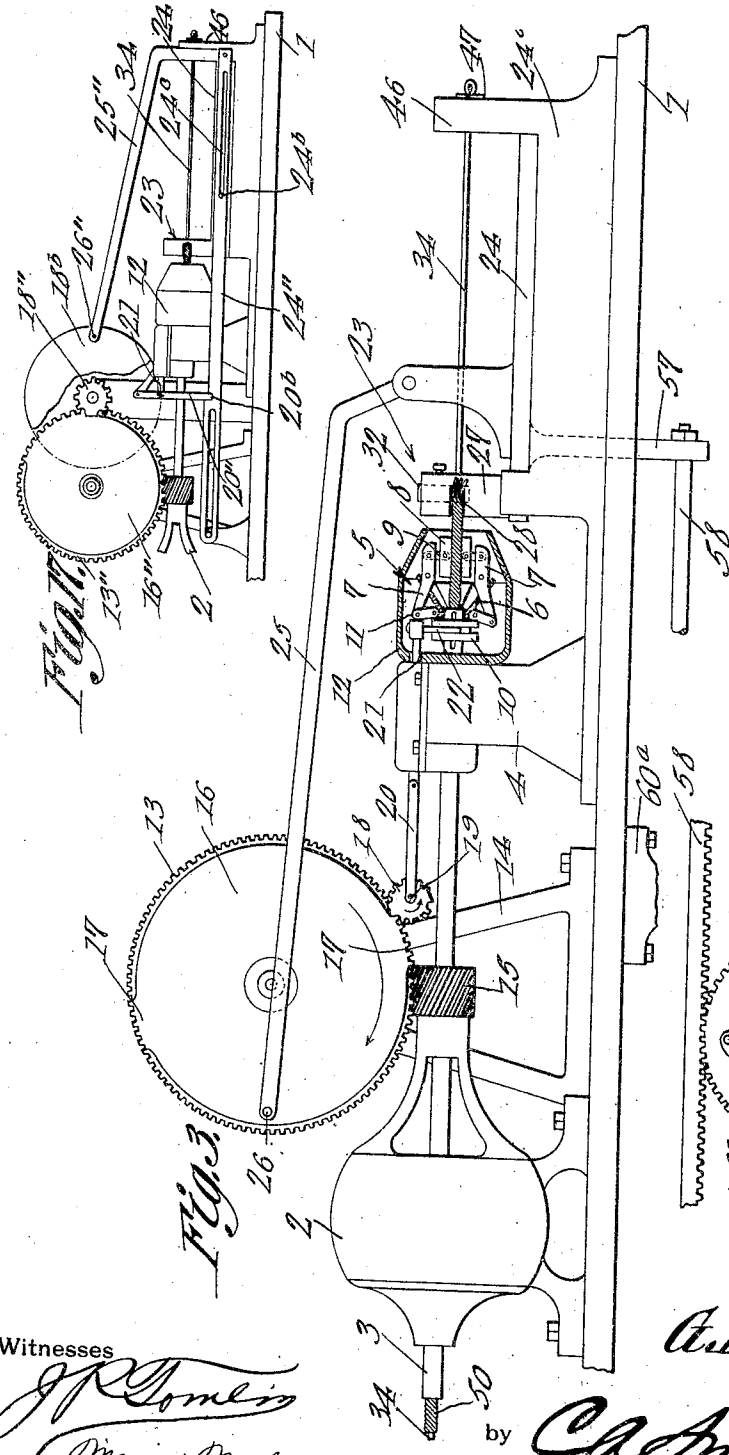

Fig. 1.

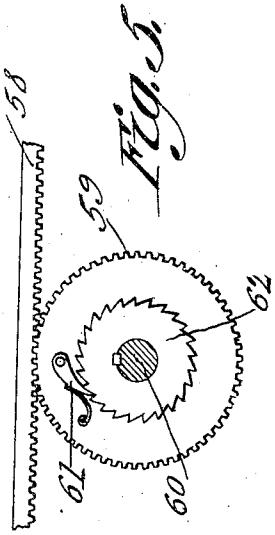

Fig. 3.

Witnesses

J. P. Lomen

Marian Moore

A. B. Smith,

Inventor

by C. A. Snow & Co.

Attorneys

G. B. SMITH.

WIRE TWISTING MACHINE.

APPLICATION FILED JULY 23, 1914.

1,165,550. Patented Dec. 28, 1915.

4 SHEETS—SHEET 3.

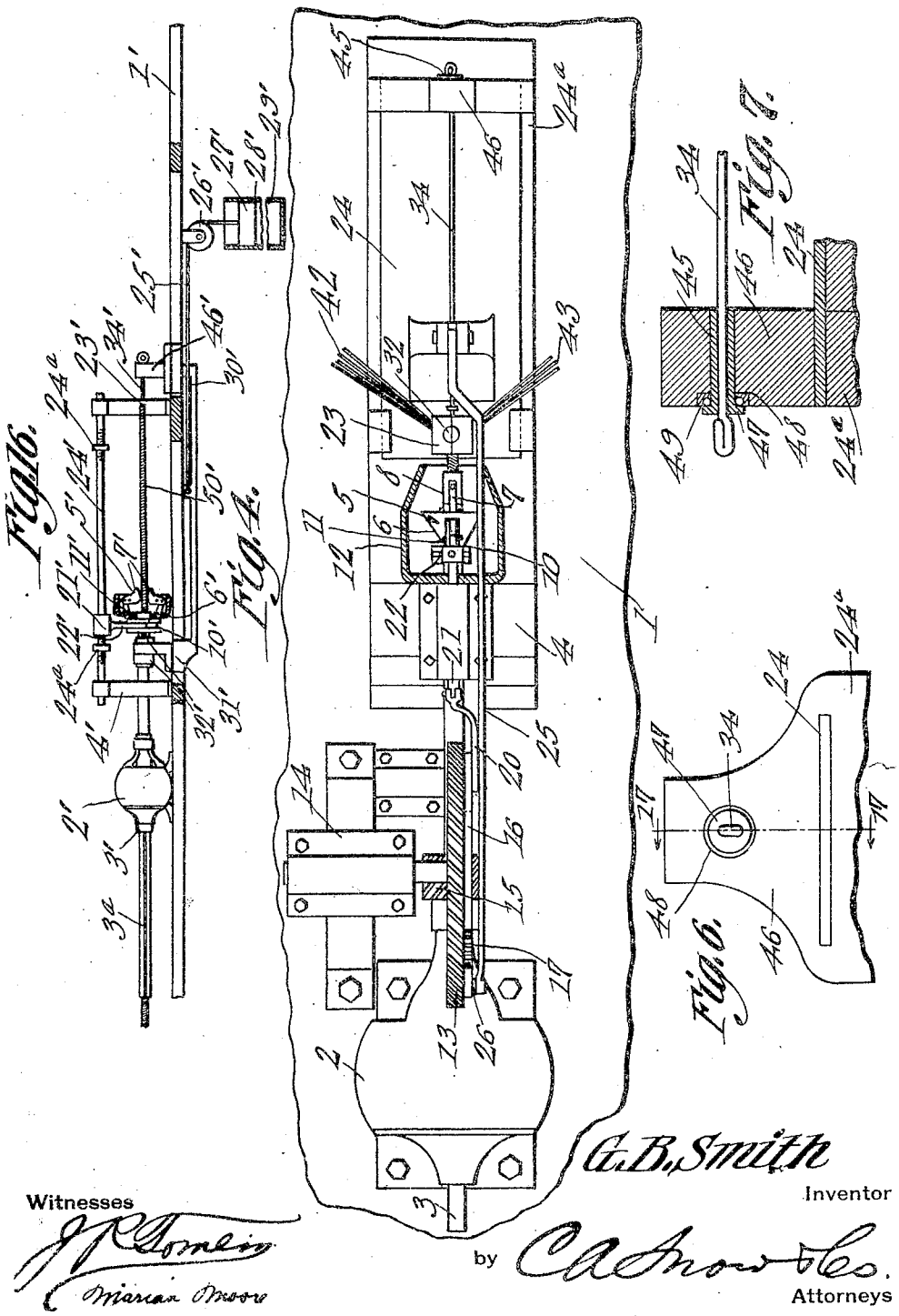

Witnesses

J. P. Tomlin

Marian Moore

G. B. Smith

Inventor

by C. A. Snow & Co.

Attorneys

G. B. SMITH.

WIRE TWISTING MACHINE.

APPLICATION FILED JULY 23, 1914.

1,165,550.

Patented Dec. 28, 1915.

4 SHEETS—SHEET 4.

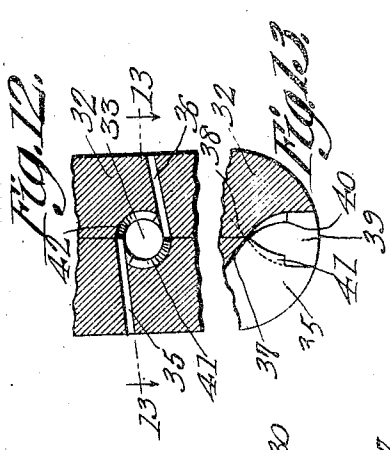

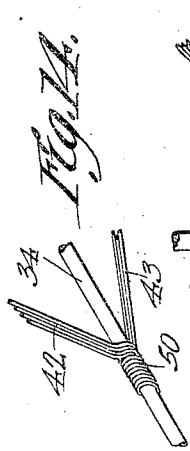

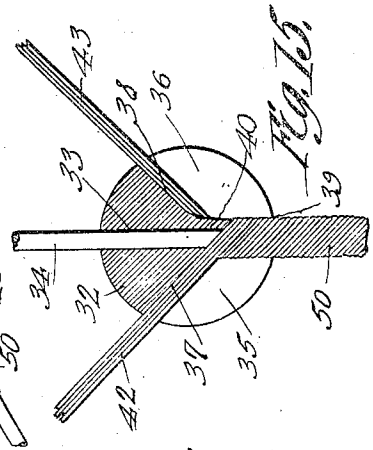

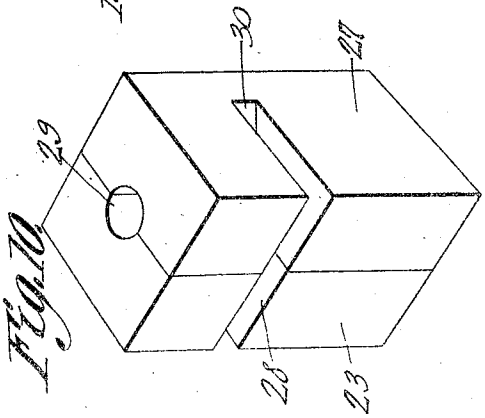

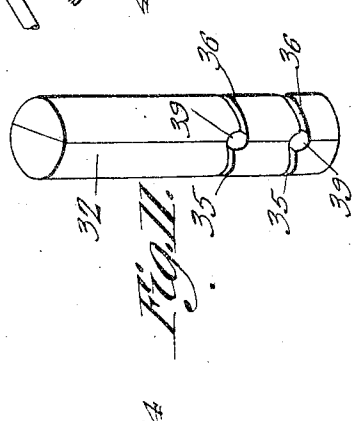

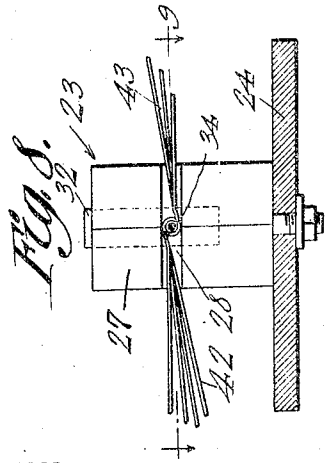

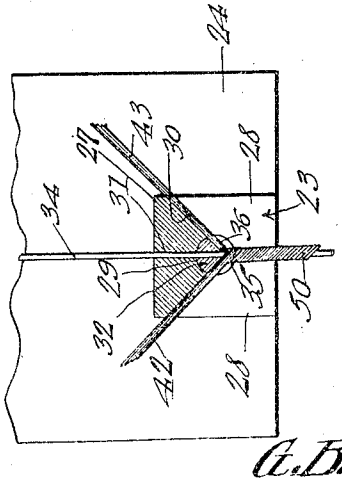

Witnesses

J. R. Tomlin

Marian Moore.

A. B. Smith
Inventor

by C. A. Snow & Co.
Attorneys

UNITED STATES PATENT OFFICE.

GARY B. SMITH, OF CHICAGO, ILLINOIS.

WIRE-TWISTING MACHINE.

1,165,550. Specification of Letters Patent. Patented Dec. 28, 1915.

Application filed July 23, 1914. Serial No. 852,610.

To all whom it may concern:

Be it known that I, GARY B. SMITH, a citizen of the United States, residing at Chicago, in the county of Cook and State of Illinois have invented a new and useful Wire-Twisting Machine, of which the following is a specification.

The present invention appertains to wire working machines, and aims to provide a novel and improved apparatus for twisting wire, whereby the same may be employed as stock for the manufacture of bed-springs or fabric, and the like.

The present invention contemplates the provision of a wire twisting machine embodying a unique assemblage of parts, whereby a continuous length of twisted wire may be formed in a convenient and efficient manner, the machine being entirely automatic, to twist the wire and to feed the wire outwardly after being twisted.

Another object of the invention is to provide novel means for taking up the twisted wire as it is delivered from the twisting mechanism and for enabling the twisted wire to be drawn off gradually or continuously without interfering with the operation of the wire twisting mechanism.

A still further object of the present invention is to provide novel means for laying and guiding the wires or strands properly onto the mandrel wire or rod.

It is also within the scope of the invention to provide a wire twisting machine which will be improved generally in its construction and details, to enhance the utility thereof.

With the foregoing and other objects in view, which will appear as the description proceeds, the invention resides in the combination and arrangement of parts and in the details of construction hereinafter described and claimed, it being understood that changes in the precise embodiment of the invention herein disclosed can be made within the scope of what is claimed without departing from the spirit of the invention.

The invention is illustrated in the accompanying drawings, wherein:—

Figure 1 is a side elevation of the machine, with the transfer table or pan shown in section. Fig. 2 is a plan view of the machine, portions being broken away. Fig. 3 is an enlarged side elevation of the machine, portions being broken away and parts being shown in section. Fig. 4 is an enlarged plan view of the structure, parts being broken away and parts being shown in section. Fig. 5 is an enlarged fragmental detail illustrating a portion of the operating mechanism for the transfer table or pan. Fig. 6 is an enlarged detail of the forward end of the machine: Fig. 7 is a sectional detail taken on the line 17—17 of Fig. 6, illustrating the manner of anchoring the mandrel wire or rod. Fig. 8 is a rear view of the device or head for applying or leading the wires or strands onto the mandrel wire. Fig. 9 is a horizontal section taken approximately on the line 9—9 of Fig. 8. Fig. 10 is an enlarged perspective view of the supporting block for the wire applying device. Fig. 11 is an enlarged perspective view of the guide member for leading the wire onto the mandrel wire. Fig. 12 is an enlarged fragmental section of the guide member. Fig. 13 is a sectional detail taken on the line 13—13 of Fig. 12. Fig. 14 is a perspective view illustrating the manner in which the wires or strands are applied to the mandrel wire. Fig. 15 is an enlarged sectional detail of the wire guiding member. Fig. 16 is a side elevation illustrating a modified form of wire twisting machine. Fig. 17 is a fragmental side elevation showing another modification.

In carrying out the present invention, there is provided a suitable base or platform 1 upon which is mounted a suitable electric motor 2 having a hollow armature shaft 3, which is extended forwardly and journaled through a pedestal 4 mounted upon the base 1, and which carries at its forward end, the twisting head 5.

The twisting head 5 includes an annular body 6 which is secured rigidly upon the forward end of the tubular armature shaft 3, and a plurality of angular levers 7 having their elbows fulcrumed to the annular body or member 6. Friction shoes or members 8 are connected to the forward arms of the levers 7 by the links 9 whereby the friction shoes 8 may have a slight movement relative to the levers 7 to properly position themselves when they are brought into gripping relation with the twisted wire, as will hereinafter appear. A collar 10 is feathered or mounted slidably upon the forward end portion of the shaft 3, and is connected to the rear arms of the levers

7 by the toggle links 11, whereby when the collar 10 is moved forwardly it will swing the toggle links 11 beyond "dead center", so as to swing the forward arms of the levers 7 inwardly to move the friction shoes 8 to gripping position. Conversely, when the collar 10 is slid rearwardly, the toggle links 11 will swing the levers in such a manner as to separate the friction shoes 8. The twisting head 5 is preferably inclosed by a housing or guard 12 surrounding the same and carried by the pedestal 4.

As a means for intermittently operating the clutch head 5, a worm wheel 13, of relatively large diameter, is journaled upon a standard or pedestal 14 carried by the base 1, and intermeshes with a worm 15 of relatively small diameter keyed or secured upon the armature shaft 3 between the motor 2 and pedestal 4. The worm wheel 13 carries or is formed at one side with a mutilated gear 16 having diametrically opposite teeth 17 adapted to alternately engage a mutilated pinion 18 which coöperates with the mutilated gear 16, whereby the pinion 18 will be given a turn of one-half a revolution for each half of a revolution of the worm wheel 13 and gear 16, the teeth 17 being diametrically opposite each other to cause the pinion 18 to be rotated in an intermittent or step by step movement. The pinion 18 is provided with a wrist pin or crank 19 to which is connected a pitman 20, and the pitman 20 is connected to the rear end of a reciprocatory rod 21 slidably carried by the upper end of the pedestal 4 and having a forked member 22 at its forward end engaging within the groove of the collar 10, whereby the collar 10 may rotate with the shaft 3, but will be constrained to move longitudinally with the rod 21 when it is slid to actuate the clutch head.

The wire or strand applying head or device 23 is carried by the rear end of a slide 24 mounted for reciprocatory movement upon a guide 24^a carried by the base 1, and the slide 24 is reciprocated timely through the medium of a pitman 25 pivotally connected to the slide 24 and to a wrist pin 26 secured to the worm wheel 13 and gear 16. The wrist pin 26 is so located with respect to the teeth 17 of the mutilated gear 16 that the slide 24 will be moved from one end of its stroke to the other, while the pinion 18 is idle. In other words, the pinion 18 is adapted to be actuated while the slide 24 is at the end of its stroke.

The wire applying device or head 23, which serves to lead or lay the wires or strands upon the mandrel wire or rod, as hereinafter set forth, embodies an upright block or body 27 secured upon the rear end of the slide 24 and having a rear horizontal slot 28 and an upwardly opening vertical bore or socket 29 intersecting the said slot at the point of convergence of its vertical or forward walls 30. The vertical or forward walls of the slot 28 diverge toward the opposite sides and forward end of the block 27 from the bore or socket 29, and the block 27 is provided with a passage 31 leading from the bore or socket 29 to the front side of the block, said passage 31 being in the plane of the slot 28.

Fitted or seated within the bore of socket 29 is a guide 32 for the wires or strands, which guide has a diametrical bore or passage 33 therethrough, in alinement with the passage 31 of the block 27 and for the passage of the mandrel wire or rod 34, as seen in Fig. 9. The guide member 32 is provided with slots 35 and 36 in its opposite sides, and is located within the slot 28 of the block 27, the slot 35 being tangential to the upper portion of the bore 33, while the opposite slot 36 is tangential with the lower portion of the said bore. The walls 37 and 38 of the respective slots 35 and 36 diverge forwardly similar to the walls 30 of the slot 28, the walls 37 and 38 of the respective slots 35 and 36 being preferably flush with the walls 30 of the slot 28. The rear portion of the bore 33 is counter-bored or enlarged, as at 39, between the slots 35 and 36, and the respective slots 35 and 36 are tangential with the upper and lower portions or walls of the counter-bore 39. The inner end of the wall 37 of the slot 35 is extended into a curved or spiral lip 40 leading to the inner end of the slot 36, and passing downwardly around the axis of the bore 33, while the inner end of the wall 38 of the slot 36 is extended upwardly into a curved or spiral lip 41 opposite the lip 40 but curved in the same general direction. The rear faces of the lips 40 and 41 are flush with or form extensions of the wall or shoulders 37 and 38 of the respective slots 35 and 36 to properly lead or lay the wires or strands 42 and 43 upon the mandrel wire 34. The block 27 and guide member 32 may be split, if desired, to facilitate their production, and the parts or sections may be suitably secured together.

The two sets or runs or wires 42 and 43 converge rearwardly from suitable spools or reels, (not shown), and pass into the slot 28 of the block 27 along the walls 30 of the said slot. The wires 42 and 43 extend into the respective slots 35 and 36 of the guide member 32 and the slots 35 and 36 are of such a width as to hold the wires of each set in flat condition as they are applied to the mandrel wire 34. From the slots 35 and 36 the wires 42 and 43 are passed or lead onto the mandrel wire 34 by the lips 40 and 41, the wires 42 being passed onto the mandrel wire 34 from the top, while the wires 43 are applied to the mandrel wire 34 from below. As illustrated, there are four of the

wires 42, and three of the wires 43, although the number of wires in each set or run may be varied.

The forward end of the mandrel wire or rod 34 is anchored to the forward end of the guide 24^a by a swivel, and to this end a sleeve or tubular member 45 is mounted for rotary movement within an upstanding portion 46 at the forward end of the guide 24^a, the forward end of the sleeve 45 having an annular flange 47 coöperating with a ball cup 48 carried by the portion 46. An annular series of ball bearings 49 are disposed between the flange 47 and the ball race of the cup 48 to enable the sleeve 45 to rotate freely, the forward end of the mandrel wire 34 being engaged through the sleeve 45 and held against rearward withdrawal, as illustrated in Fig. 7.

As a means for taking up the twisted wire 50 as it passes through the armature shaft 3, as will hereinafter appear, there is provided a circular turn-table or pan 51 mounted upon a suitable bearing 52 and having the upturned rim 53. The center of the table or pan 51 is located at one side of the shaft 3, and the table or pan 51 is disposed below the said shaft, whereby the twisted wire 50 delivered from the tubular shaft 3 will drop onto the table or pan 51 as indicated in Fig. 1, and the table or pan being rotated will cause the twisted wire to be laid in a spiral manner upon the table or pan 51, as indicated at 50^a. In order to permit the twisted wire to be drawn from the table or pan 51, the table or pan 51 is provided with a central or upstanding shell 54 of tapered or conical form and around which the inner convolution of the spiral portion 50^a is disposed. The shell 54 being of tapered or conical form will enable the twisted wire to be readily drawn therefrom centrally of the table or pan 51, whereby the twisted wire may be withdrawn axially upward in a convenient manner.

The actuating means for the table or pan 51 embodies an arm 57 depending from the slide 24, and a rack 58 attached to the lower end of the arm 57 below the bar 1 and intermeshing with a gear wheel 59 mounted loosely upon a shaft 60 journaled in a hanger 60^a. A spring pressed dog or pawl 61 is carried by the gear wheel 59 and is arranged to engage a ratchet wheel 62 keyed or secured in any suitable manner upon the shaft 60. The rack 58 projects rearwardly from the arm 57, and the pawl or dog 61 and ratchet wheel 62 are so arranged, that when the rack 58 is moved rearwardly with the slide 24, the shaft 60 will be rotated and when the rack 58 is drawn forwardly, the pawl or dog 61 will pass idly around the ratchet wheel 62 without rotating the shaft 60.

A pulley wheel 63 is keyed or otherwise secured upon the shaft 60, and an endless belt or cable 64 is trained around the pulley 63 and around a pulley 65 formed upon or attached to the table or pan 51, the belt or cable 64 being readily guided between the pulleys 63 and 65 by idlers 66.

In operation, the mandrel wire 34 which passes through the passage 31 of the block 27 and the bore 33 of the wire guiding member 32, passes axially through the clutch or twisting head 5 and thence axially into the hollow or tubular shaft 3. The mandrel wire 34 is preferably extended completely through the shaft 3, as indicated in Fig. 3, to hold the twisted wire 50 against buckling or distorting while passing through the armature shaft 3. The wires 42 and 43 are unwound from suitable spools or reels (not shown), and are lead into the slot 28, of the block 27, and thence through the respective slots 35 and 36. The wires 42 and 43 are then twisted or coiled around the mandrel wire 34, this being facilitated by the respective lips 40 and 41 which serve to properly guide or lead the wires 42 and 43 onto the mandrel wire 34. The mandrel wire 34 having its forward end swiveled to the portion or member 46, may rotate freely as the wire is twisted, but will be prevented from being drawn rearwardly with the twisted wire as the twisted wire is intermittently fed rearwardly from the twisting mechanism. Supposing that sufficient wire has been twisted around the mandrel 34, to be engaged by the rotary clutch head 5, and supposing the parts to be arranged as seen in Fig. 3, with the rod 21 moved forwardly so as to move the links 11 forwardly beyond dead center, to thereby lock the clutch or friction shoes 8 tightly into engagement with the twisted wire extending from the wire applying head or device 23 through the clutch head 5 into the forward end of the hollow armature shaft 3, then, as the armature shaft 3 is rotated, the clutch head 5 will be rotated therewith and the friction shoes 8 tightly embracing the twisted wire 50, will rotate the same. This will cause the wires 42 and 43 to be wound or coiled around the mandrel wire 34, the wires 42 and 43 being drawn through the slots 35 and 36, and being properly guided and led upon the mandrel wire 34, by the walls 37 and 38 of the respective slots 35 and 36, and by the lips 40 and 41, respectively. In other words, the walls 37 and 38 of the respective slots 35 and 36 direct the wires 42 and 43 at the proper angle toward the point where the wires 42 and 43 are wound or coiled upon the mandrel wire 34, while the lips 40 and 41 serve to lay the wires 42 and 43, respectively, in the proper helical or spiral manner upon the mandrel wire 34.

During the rotation of the twsiting or clutch head 5, which causes the wires or

strands 42 and 43 to be wound upon the mandrel wire 34 to provide the twisted wire 50, the pitman 25 is moved forwardly by the wrist pin 26, since the worm wheel 13 is continually rotated at the proper velocity, by the worm 15, and the pitman 25 in moving forwardly will move the slide 24 forwardly. This will cause the wire applying device 23 to be moved forwardly as the wires or strands 42 and 43 are laid and twisted around the mandrel wire 34. During this operation, the twisted wire 50 is merely rotated by the clutch head 5, but is not moved longitudinally, while the wire applying device is moved forwardly at the proper velocity to enable the wires or strands 42 and 43 to be properly wound and twisted upon the mandrel wire 34. When the slide or carriage 24 has reached the forward end of its stroke, one set of teeth 17 of the mutilated gear 16 which rotates with the worm wheel 13, will engage the corresponding teeth of the mutilated pinion 18, and will rotate the pinion 18 through one half of a revolution. This will cause the rod 21 to be drawn rearwardly, whereby the links 11 in being pulled rearwardly with the collar 10, will cause the levers 7 to be so swung, as to release the friction shoes 8 from the twisted wire 50. Then, when the mutilated pinion 18 stops, the pitman 25 will be drawn rearwardly, so as to move the slide 24 rearwardly. This will cause the wire applying device 23 to be moved rearwardly toward the clutch head 5, and as a result, the twisted wire 50 will be slid rearwardly through the armature shaft 3, and the wire applying device 23 will be brought to initial position adjacent the clutch head 5. During the rearward movement of the slide 24, the rack 58 will be carried rearwardly therewith, so as to rotate the gear wheel 59 and the said gear wheel being rotated will cause the pawl or dog 61 to engage the ratchet wheel 62 to rotate the shaft 60. In this manner, the pulley 63 will be rotated with the shaft 60 and as a result the table or pan 51 will be rotated through a suitable arc, in order that that portion of the twisted wire 50 projected from the rear end of the shaft 3, may be properly laid onto the table or pan 51. In this manner, when the slide 24 is moved forwardly to eject the twisted wire 50 from the shaft 3, the table or pan 51 is rotated through a suitable arc, for properly laying the twisted wire 50 in a spiral manner upon the table or pan 51, as indicated at 50^a. During the forward movement of the slide 24, the gear wheel 59 being rotated in a reverse manner, will merely carry the pawl or dog 61 idly around the ratchet wheel 62 without rotating the shaft 60, and without moving the table or pan 61 in a reverse or retrograde direction. It will therefore be obvious that as the slide 24 is reciprocated back and forth during the alternate twisting and rearward feeding of the twisted wire, the transfer table or pan 51 will be intermittently rotated to correspond with the intermittent or step-by-step movement of the twisted wire 50. The twisted wire 50 may be regularly drawn from the table or pan 51, however, since the twisted wire is carried from the inner convolution of the spiral portion 50^a upwardly around the shell 54 as seen in Fig. 1, and which will enable the twisted wire to be taken from the transfer table or pan 51 without inconvenience. As the twisted wire is taken from the table or pan 51, the convolutions of the spiral portion 50^a carried by the table or pan 51, will be drawn inwardly, this being facilitated by the intermittent rotation of the table or pan. The twisted wire may thus be led from the transfer table or pan 51 to a machine for converting the twisted wire into bed springs, or to form the bed fabric from the twisted wire. After the wire applying device 23 has been moved rearwardly with the slide 24 to move that portion of the twisted wire 50 rearwardly which has just been completed, the respective teeth 17 of the mutilated gear 16 will engage the proper teeth of the mutilated pinion 18 to rotate the pinion through one half of a revolution, and as a result the rod 30 will be moved forwardly to throw the clutch head 5 into gripping engagement with the twisted wire 50. The twisting operation will then be resumed, as above described.

From the foregoing, it will be obvious that the present machine is entirely automatic in its nature, for applying the wires or strands onto the mandrel wire, for twisting the wire, and for feeding or delivering the wire through the armature shaft 3 onto the transfer table or pan 51, the transfer table or pan being operatively connected to the twisting mechanism to be actuated properly thereby as the twisted wire is delivered. Particular attention is directed to the fact that the hollow armature shaft 3 of the motor 2 provides a guide through which the twisted wire is delivered, the hollow armature shaft also being of advantage since it is comparatively light in weight, and affords ventilation therethrough for cooling the armature. The shaft 3 may also be conveniently rotated at a high velocity by the electric motor 2, it being noted that the slide or carriage 24 which carries the wire applying device 23, is operatively connected to the armature shaft 3, to be opened and closed.

The guide member 32 of the wire applying device 23 is preferably formed of tempered steel or other hard metal capable of withstanding the wear and tear incident to the passage of the wire or strands 42 and 43 through the guide member 32 and onto

the mandrel wire 34. The slots 35 and 36, and corresponding parts of the guide member 32 are preferably duplicated, as seen in Fig. 11, whereby when one set of slots and associate parts are worn out, due to continued use, the guide member 32 may be readjusted to bring the other set into play. The guide member 32 having the peculiar slots and lips will serve to properly guide and lay the wires or strands 42 and 43 upon the mandrel wire, while the twisted portion 50 is rotated to coil or wind the wires or strands onto the mandrel wire.

The modification illustrated in Fig. 16, is somewhat simplified, and includes the base 1′ carrying the motor 2′ which has a hollow armature shaft 3′ through which the tubular supplemental shaft 3^a is feathered so as to be rotated therewith. The shaft 3^a is journaled through a pedestal 4′ secured upon the base 1′, and the forward end of the shaft 3^a carries the twisting or clutch head 5′ having the body or frame 6′ secured rigidly to the forward end of the shaft 3^a and having the clutch levers 7′ fulcrumed thereto which are adapted to be swung into and out of gripping engagement with the twisted wire 50′. The clutch head 5′ includes a collar 10′ feathered upon the forward end portion of the shaft 3^a, and links 11′ connecting the collar 10′ and clutch levers 7′ for swinging the levers 7′ into and out of engagement with the twisted wire 50′ as the collar 10′ is moved rearwardly and forwardly, respectively, relative to the shaft 3^a. The shaft 3^a is slidable through the hollow armature shaft 3′ and through the pedestal 4′ to enable the clutch head 5′ to move to and from the wire applying device 23′ which is similar to the wire applying device 23 above described. A sleeve 21′ is slidable upon a guide rod 24′ carried by the pedestal 4′ and wire applying device 23′, and the sleeve 21′ has a depending fork 22′ engaging the groove collar 10′. Collars or stops 24^a are threadedly or otherwise engaged upon the guide rod 24′ for longitudinal adjustments and to be engaged by the sleeve 21′ as the clutch head 5′ is reciprocated. In order to move the clutch head 5′ forwardly when the clutch levers 7′ are released from the twisted wire 50′, a cable 25′ is connected to a slide 30′, and is trained over a pulley or guide 26′ and has secured to its lower end a weighted piston 27′ working snugly within an upright dash pot 28′ having a lower vent 29′. The portion 46′ is carried by the slide 30′ and the slide has a pedestal 31′ through which the shaft 3^a is journaled, collars 32′ being secured upon the shaft 3^a at the sides of the boxing or bearing of the pedestal 31′ to cause the shaft 3^a to slide with the slide or carriage 30′.

In the operation of the modified form, the clutch head 5′ is movable back and forth instead of the wire applying device as in the preferred form above described. Supposing the clutch levers 7′ to be thrown into gripping engagement with the twisted wire 50′, then, the shaft 3^a being rotated with the armature shaft 3′, will cause the wire to be twisted, and the wires or strands being wound upon the mandrel wire 34′ by the wire applying device 23′, will cause the clutch head 5′ to be forced rearward as the wires or strands are wound upon the mandrel wire. Then, when the clutch head 5′ is moved rearwardly sufficiently to bring the sleeve 21′ into contact with the rear stop 24^a, the collar 10′ will be stopped in its rearward movement, while the clutch levers 7′ will continue to move rearwardly slightly, so that they will be thrown out of gripping engagement with the twisted wire 50′. During the rearward movement of the clutch head 5′ and slide 30′ the piston 27′ will be raised within the dash pot 28′. The clutch levers 7′ being released from the twisted wire 50′ will permit the clutch head 5′ to be drawn forwardly with the slide 30′ and shaft 3^a, due to the weight of the piston 27′. The piston 27′ gravitating within the dash pot 28′ will thus draw the slide 30′ forwardly to initial position. After the clutch head 5′ has been moved forwardly so that the sleeve 25′ contacts with the forward stop 24^a, the movement of the collar 10′ will be arrested, and the excessive forward movement of the clutch levers 7′ carried by the body or frame 6′, will cause the clutch levers to be swung into gripping engagement with the twisted wire 50′. As a result, the twisting operation will be resumed, and the clutch head 5′ will be moved rearwardly as above intimated. It will be noted that when the shaft 3^a is moved rearwardly with the clutch head 5′, the coiled wire 50′ will be moved rearwardly therewith off of the mandrel 34′, while when the clutch head 5′ and shaft 3^a are drawn forwardly, the twisted wire 50′ will remain stationary, and as a result, the twisted wire will be moved rearwardly relative to the shaft 3^a to deliver the twisted wire from the rear end of the shaft 3^a.

In Fig. 17, there is illustrated a modified form of mechanism for actuating the slide or carriage 24, and for actuating the clutch head 5 of the preferred form of the invention. In this modification, the worm wheel 13″ carries a mutilated gear 16″ which cooperates with a mutilated pinion 18″ to rotate the pinion 18″ through a complete revolution at the proper intervals. A disk 18^b is carried by the pinion 18″ and has a wrist pin 26″ to which the pitman 25″ is connected. The pitman 25″ is connected to the rear end of a slide 24″ which has a slot 24^c into which a pin 21^b projects from the slide or

carriage 24. The slide 24'' is provided with a notch 20^b receiving one end of a lever 20'' which is connected to the rod 21 for actuating the clutch head 5.

With the modified form illustrated in Fig. 17, the slide or carriage 24 is moved forwardly by the winding of the wires or strands upon the mandrel wire 34, which will cause the wire applying device 23 to be moved forwardly, as will be apparent. During the forward movement of the carriage 24, the pinion 18'' will be held so that the wrist pin 26'' is at its foremost position, to hold the slide 24'' at the forward end of its allotted movement. Then, as the carriage 24 moves forwardly, the pin or lug 24^b of the carriage 24 will move forwardly within the slot 24^c, but the slot 24^c is sufficiently long, so that the pin or lug 24^b will not reach the forward end of the slot 24^b when the carriage 24 is moved completely forward. This allows of a slight rearward movement of the slide 24'' before the forward end of the slot 24^c engages the pin or lug 24^b. Now, after the carriage 24 has been moved forwardly the teeth of the mutilated gear 16'' will engage the teeth of the pinion 18'' to rotate the disk 18^b through a complete revolution. During the first half of the revolution of the disk 18^b, the pitman 25'' will be drawn rearwardly to move the slide 24'' rearwardly, and as a result, the notch 20^b will swing the lever 20'' in such a manner as to release the clutch head 5 from the twisted wire 50. Then, during the remaining half of the complete revolution of the disk 18^b, the pitman 25'' will again be moved forwardly, to return the slide 24'' quickly to its forward position and to return the lever 20'' to its original position for throwing the clutch head 5 into frictional engagement with the twisted wire 50 to continue the twisting operation. In the meantime, the rearward movement of the slide 24'' will have moved the slot 24^c forwardly so as to enable the carriage 24 to move forwardly without interference.

Having thus described the invention, what is claimed as new is:—

1. In a wire working machine, a hollow rotary shaft, a mandrel entering the shaft, a wire applying device coöperating with the mandrel, the said shaft and wire applying device being movable to and from each other, a clutch head carried by the said shaft and having means for gripping the twisted wire, and means for bringing the clutch head into and out of engagement with the twisted wire.

2. In a wire twisting machine, an electric motor having a hollow armature-shaft, a mandrel entering the said shaft, a wire applying device coöperating with the mandrel, said shaft and wire applying device being movable to and from each other, a clutch head carried by the said shaft and having means for gripping the twisted wire, and means for bringing the said means of the clutch head into and out of engagement with the twisted wire.

3. In a wire working machine, a rotary hollow shaft, a wire twisting device operably connected thereto and arranged to deliver the twisted wire through the said shaft, a rotary table operably connected to the said shaft to be advanced as the twisted wire is delivered from the said shaft, the table being arranged to receive the twisted wire in a spiral manner thereon, and having a central guide through which the twisted wire may be extended from the inner convolution of the spiral portion.

4. In a wire twisting machine, a rotary hollow shaft, a mandrel extending into the shaft, a wire applying device coöperating with the mandrel, the shaft and wire applying device being movable to and from each other, a clutch head carried by the shaft and adapted to grip the twisted wire upon the mandrel, means for bringing the clutch head into and out of engagement with the twisted wire, a turntable arranged to receive the twisted wire delivered from the said shaft, the turntable having a central guide for leading the twisted wire from the table, and means operatively connecting the table and said shaft for intermittently rotating the table as the twisted wire is delivered through the said shaft.

5. In a wire twisting machine, a mandrel, and a wire applying device including a guide member having a bore through which the mandrel is passed, and having opposite slots for the passage of the wires, the said slots being tangential with opposite portions of the said bore, the said slots having diverging walls extending from the said bore for guiding the wire therealong to the mandrel.

6. In a wire twisting machine, a mandrel, and a wire applying device including a guide member having a bore through which the mandrel is passed, and having opposite slots for the passage of wires, the said slots being tangential with opposite portions of the said bore, the said guide member having lips extended from the inner ends of the said slots partially around the mandrel in such a direction as to lay the respective wires in the proper helical manner upon the mandrel.

7. In a wire twisting machine, a mandrel, and a wire applying device including a guide member having a bore through which the mandrel extends, the guide member having opposite slots for the passage of the two sets of wires, the said slots having diverging walls extending from the said bore for guiding the respective wires at the proper angle to the mandrel, the slots being tangential with opposite portions of the said bore and

the said guide member having curved lips extended from the inner ends of the said walls partially around the mandrel for laying the wires in a helical manner upon the mandrel.

8. In a wire twisting machine, a mandrel, and a wire applying device embodying a block having a horizontal slot, an upwardly opening socket intersecting the slot, and a bore leading from the said socket away from the slot, and a guide member inserted in the said socket and having a bore alining with the aforesaid bore, the mandrel passing through the said bores, the guide member having opposite slots within the slot of the said block for the passage of the wires, and the said slots of the guide member being tangential with the upper and lower portions of the said bore of the guide member.

9. A mechanism of the type described, including an electric motor with an armature tubular shaft, a mandrel, said shaft being arranged to receive a plurality of strands and for the passage longitudinally therethrough of said strands, said mandrel being arranged to receive said strands for effecting the twisting of the same, and a clutch arranged to automatically grip said strands to said mandrel during the twisting of said strands.

10. A mechanism of the type described, including a motor with its shaft, a mandrel, said shaft being arranged to receive a plurality of strands or wires and for the passage longitudinally therethrough of said strands, said mandrel being arranged to have said strands delivered thereon for effecting the twisting thereof, and means for directly gripping the coiled or twisted wire to the mandrel from the motor shaft, whereby the same or uniform speed is directly transmitted to the wire coil and mandrel.

11. In a wire working machine, a rotary clutch head adapted for the passage of twisted wire therethrough and arranged to grip and release said wire, a mandrel upon which the wire is arranged to be twisted by said clutch head, a wire applying device cooperating with said mandrel, the clutch head and wire applying device being movable to and from each other, and means for bringing the clutch head into and out of engagement with the wire.

12. In a wire working machine, a rotary clutch head adapted for the passage of twisted wire therethrough and arranged to grip and release said wire, a mandrel upon which the wire is arranged to be twisted by said clutch head, a wire applying device cooperating with said mandrel, the clutch head and wire applying device being movable to and from each other, and means for automatically bringing the clutch head into and out of engagement with the twisted wire when the clutch head and wire applying device move away from and toward each other, respectively.

13. In a wire working machine, a rotary clutch head adapted for the passage of twisted wire therethrough and having means for gripping the twisted wire, wire feeding means coöperable with the clutch head, the clutch head and wire feeding means being movable relative to one another, and means for bringing the gripping means of the clutch head into and out of engagement with the twisted wire.

14. In a wire working machine, a rotary clutch head adapted for the passage of twisted wire therethrough and having means for gripping the twisted wire, wire feeding means coöperable with the clutch head, the clutch head and wire feeding means being movable relative to one another, and means for automatically bringing the gripping means of the clutch head into and out of engagement with the twisted wire when the clutch head and feeding means move away from and toward one another, respectively.

In testimony that I claim the foregoing as my own, I have hereto affixed my signature in the presence of two witnesses.

GARY B. SMITH.

Witnesses:
IVY E. SIMPSON,
MARIAN MOORE.