(No Model.) 12 Sheets—Sheet 1.

O. E. MICHAUD.

RAILWAY PASSENGER MILEAGE REGISTER.

No. 387,898. Patented Aug. 14, 1888.

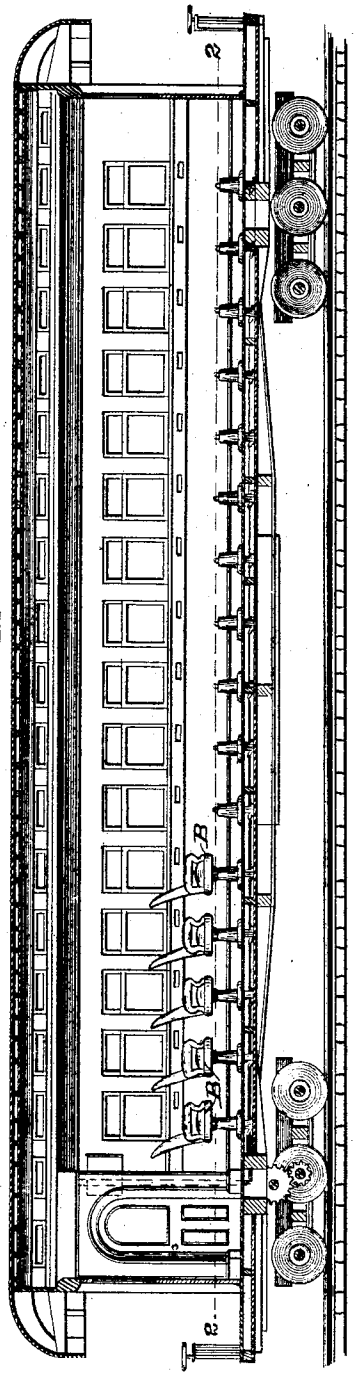

Fig. 1.

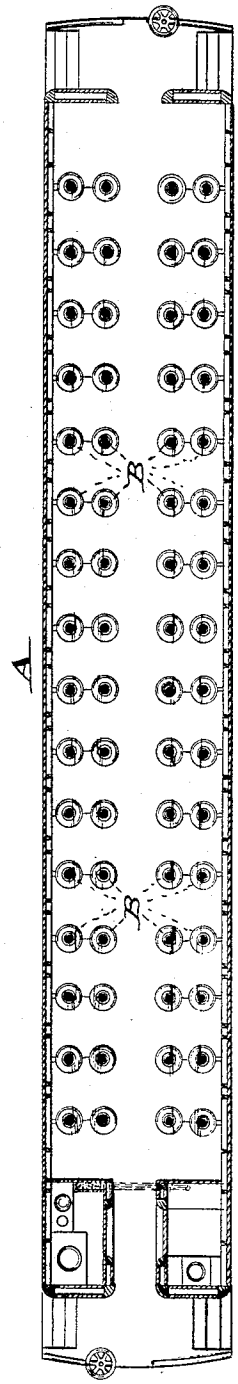

Fig. 2.

Attest:
W. J. Kesl.
J. W. Sanford.

Inventor:
Onesime E. Michaud.
by C. D. Moody,
atty.

N. PETERS, Photo-Lithographer, Washington, D. C.

(No Model.) 12 Sheets—Sheet 2.

O. E. MICHAUD.

RAILWAY PASSENGER MILEAGE REGISTER.

No. 387,898. Patented Aug. 14, 1888.

Fig. 3.

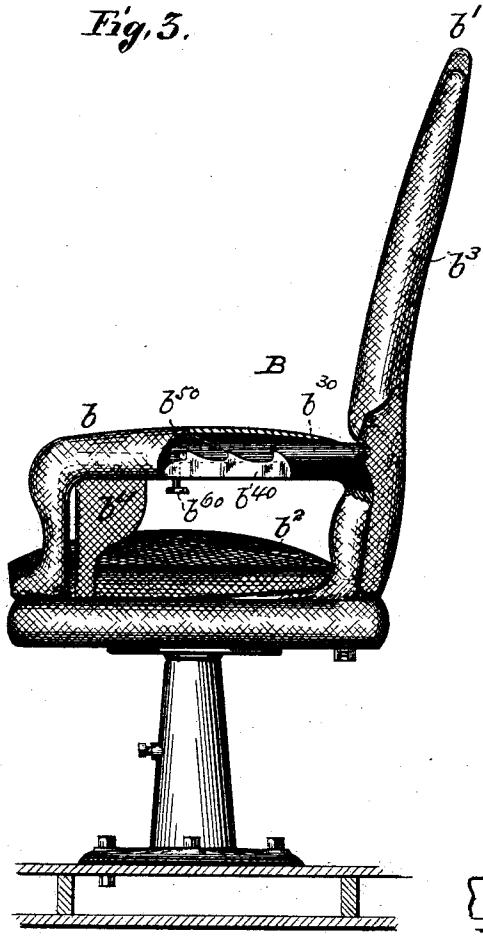

Fig. 4.

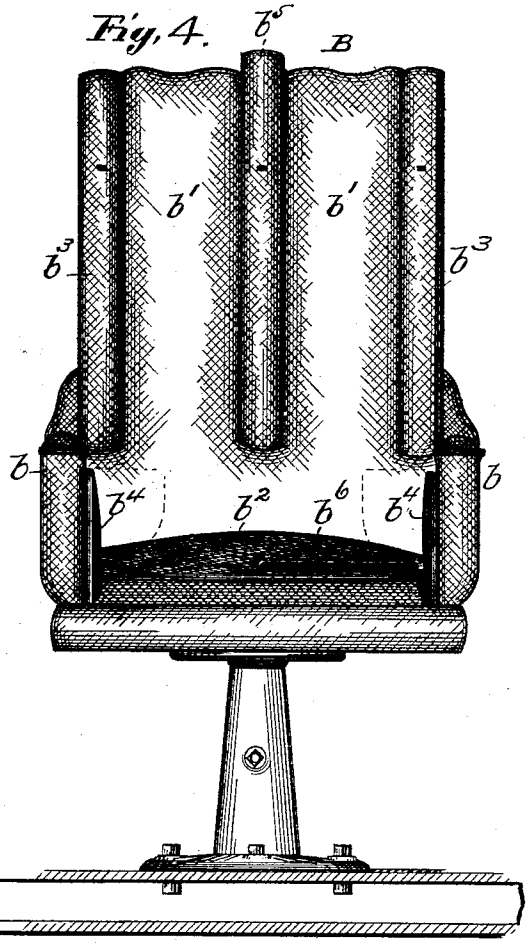

Fig. 5.

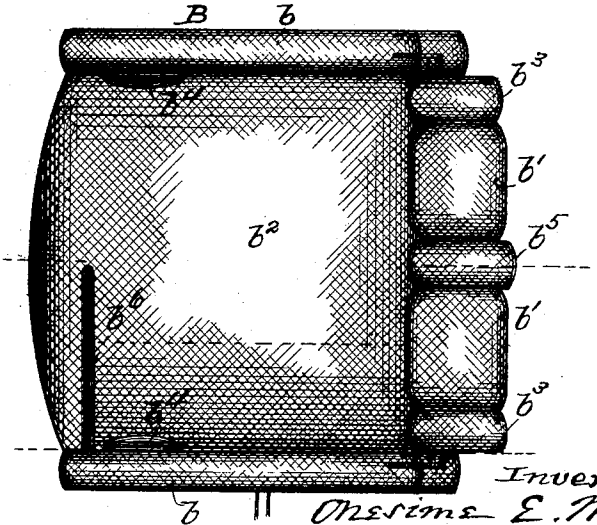

Attest:
W. J. Keal.
[illegible]

Inventor:
Onesime E. Michaud.
by C. D. Moody, atty.

N. PETERS. Photo-Lithographer, Washington, D. C.

(No Model.) 12 Sheets—Sheet 3.

O. E. MICHAUD.

RAILWAY PASSENGER MILEAGE REGISTER.

No. 387,898. Patented Aug. 14, 1888.

Fig. 6.

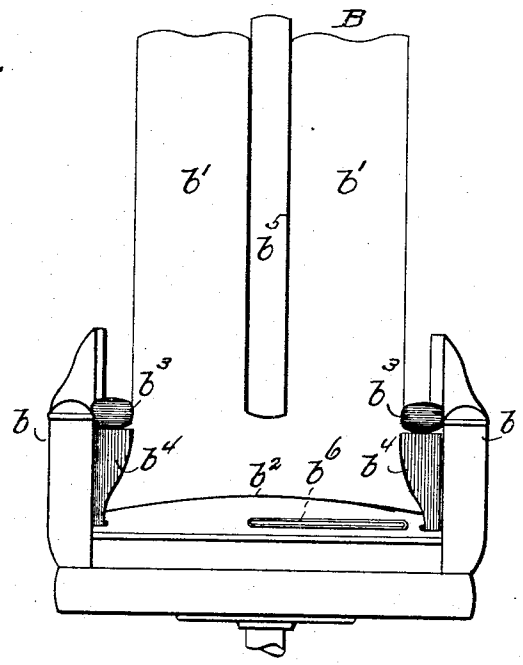

Fig. 7.

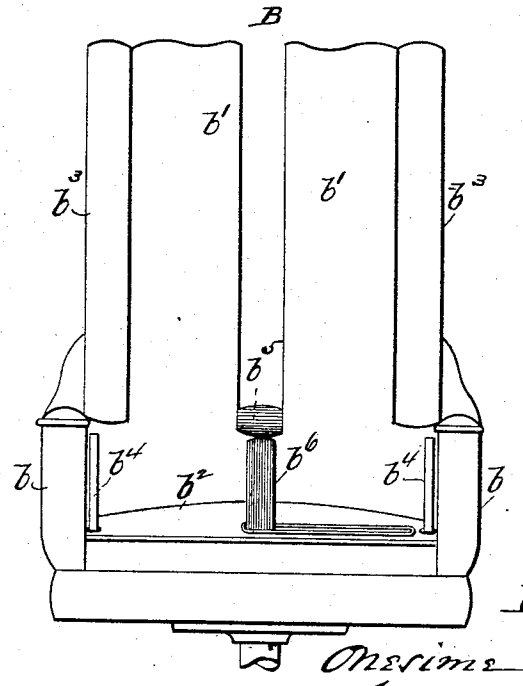

Attest:
W. Kesl.
F. W. Lisanford.

Inventor:
Onesime E. Michaud.
by C. D. Moody.
Atty.

N. PETERS. Photo-Lithographer. Washington, D. C.

(No Model.)

12 Sheets—Sheet 4.

O. E. MICHAUD.

RAILWAY PASSENGER MILEAGE REGISTER.

No. 387,898. Patented Aug. 14, 1888.

Fig. 8.

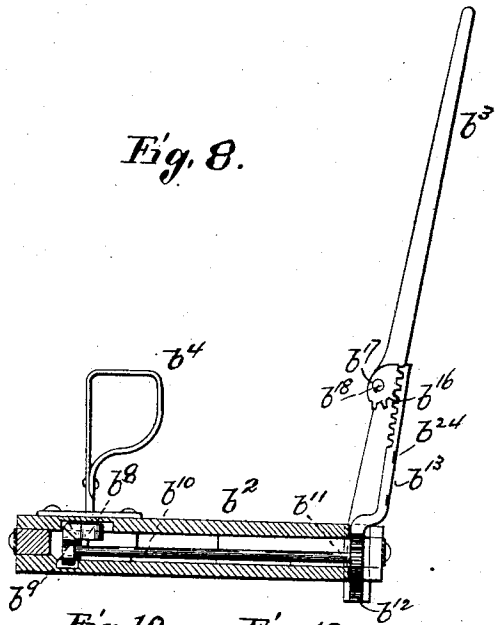

Fig. 9.

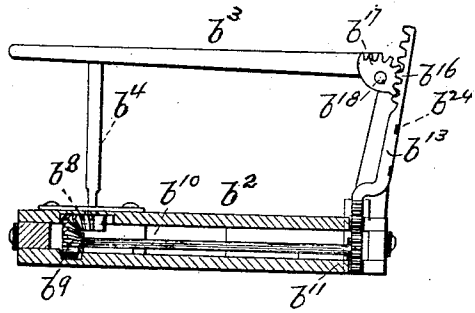

Fig. 10.

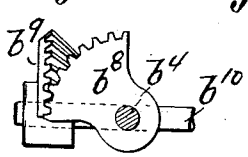

Fig. 12.

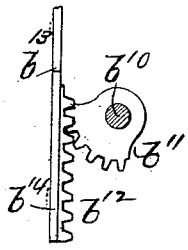

Fig. 11.

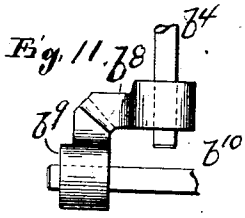

Fig. 13.

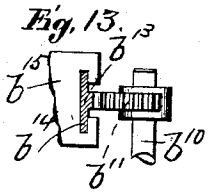

Fig. 14.

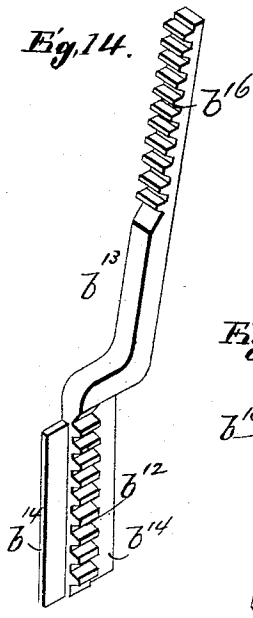

Fig. 15.

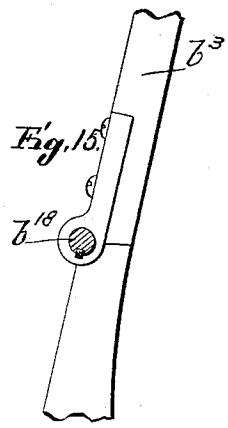

Attest;

W. J. Kesl.

S. W. Sanford.

Inventor;

Onesime E. Michaud,

by C. D. Moody,

atty.

N. PETERS, Photo-Lithographer, Washington, D. C.

(No Model.) 12 Sheets—Sheet 5.

O. E. MICHAUD.

RAILWAY PASSENGER MILEAGE REGISTER.

No. 387,898. Patented Aug. 14, 1888.

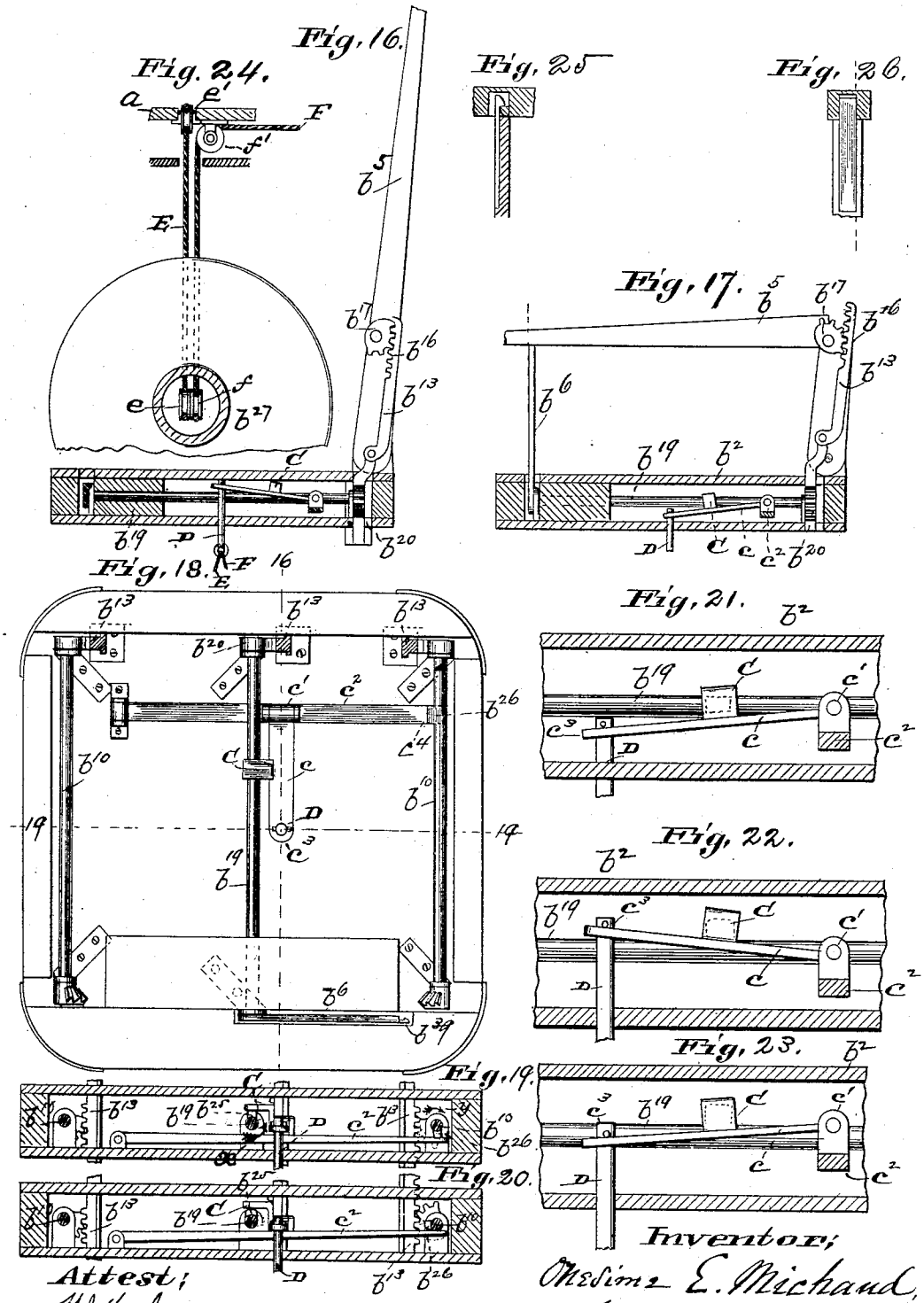

Attest;
W. J. Kesl.
J. W. Sanford

Inventor;
Onesime E. Michaud,
by C. D. Moody,
atty.

N. PETERS, Photo-Lithographer, Washington, D. C.

(No Model.) 12 Sheets—Sheet 6.

O. E. MICHAUD.

RAILWAY PASSENGER MILEAGE REGISTER.

No. 387,898. Patented Aug. 14, 1888.

Fig. 27.

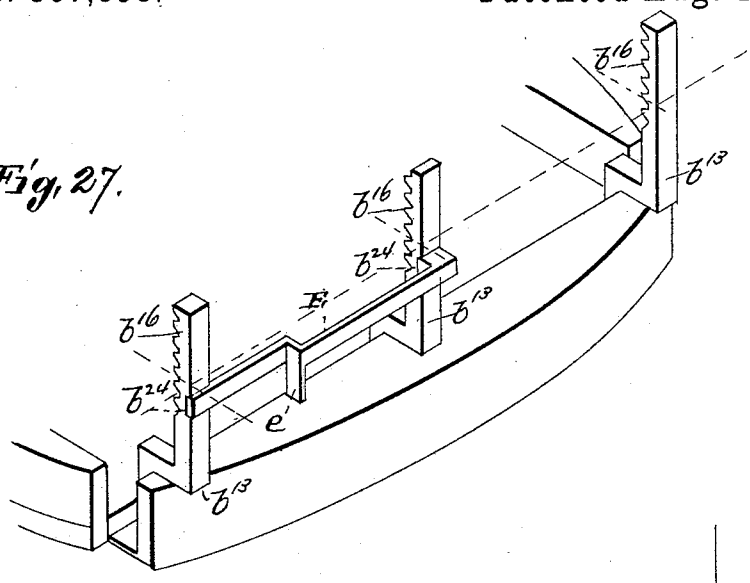

Fig. 28.

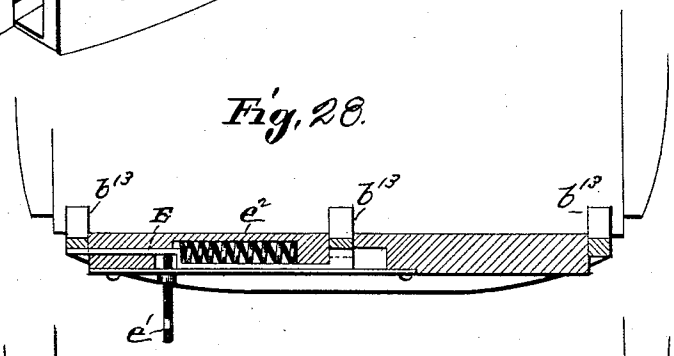

Fig. 29.

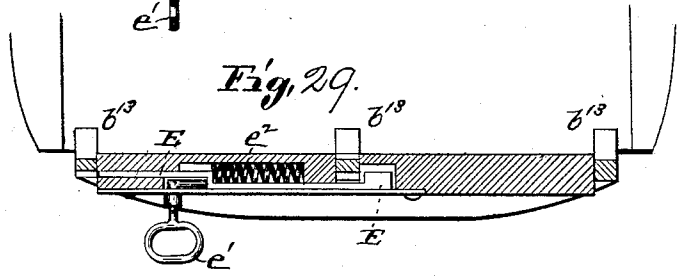

Attest;
W. J. Keel.
Jno. C. Crawford.

Inventor;
Onesime E. Michaud.
by E. D. Moody
atty

N. PETERS, Photo-Lithographer, Washington, D. C.

(No Model.) 12 Sheets—Sheet 7.

O. E. MICHAUD.

RAILWAY PASSENGER MILEAGE REGISTER.

No. 387,898. Patented Aug. 14, 1888.

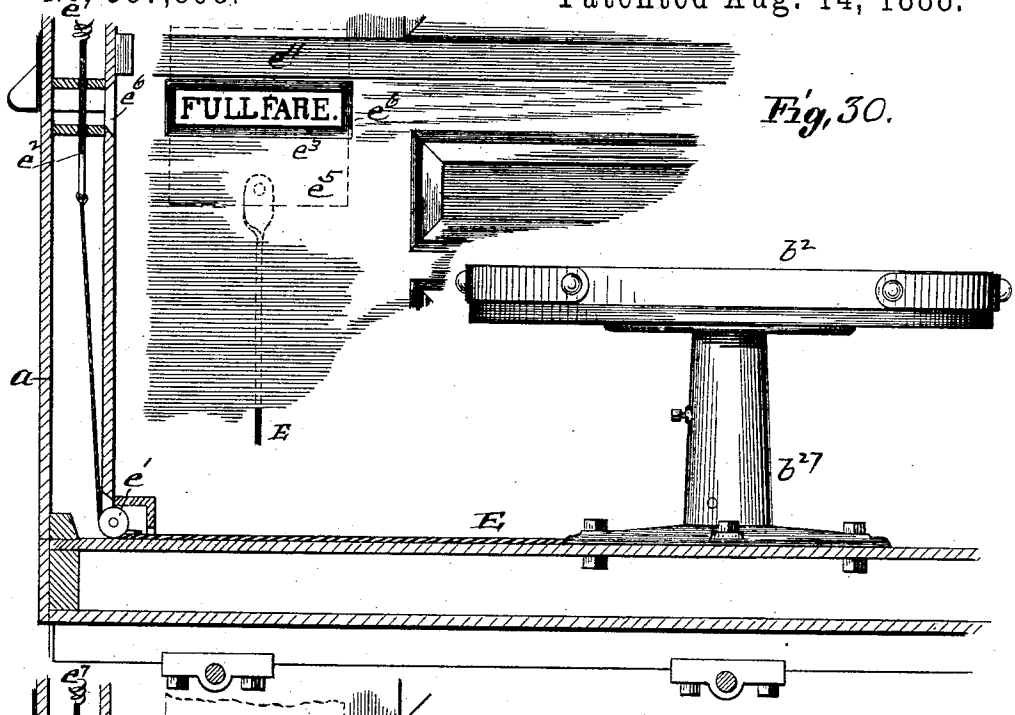

Fig. 30.

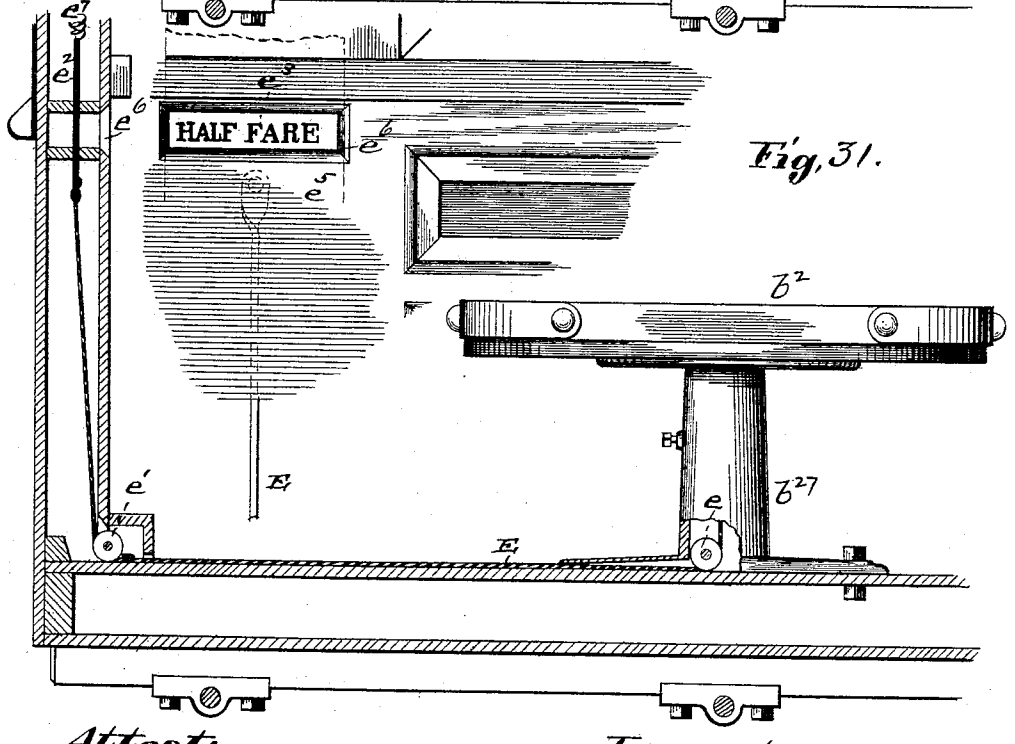

Fig. 31.

Attest;
W. J. Kesl.
J. W. Crawford

Inventor;
Onesime E. Michaud.
by C. D. Moody.
atty.

N. PETERS, Photo-Lithographer, Washington, D. C.

(No Model.) 12 Sheets—Sheet 8.

O. E. MICHAUD.

RAILWAY PASSENGER MILEAGE REGISTER.

No. 387,898. Patented Aug. 14, 1888.

Fig. 32.

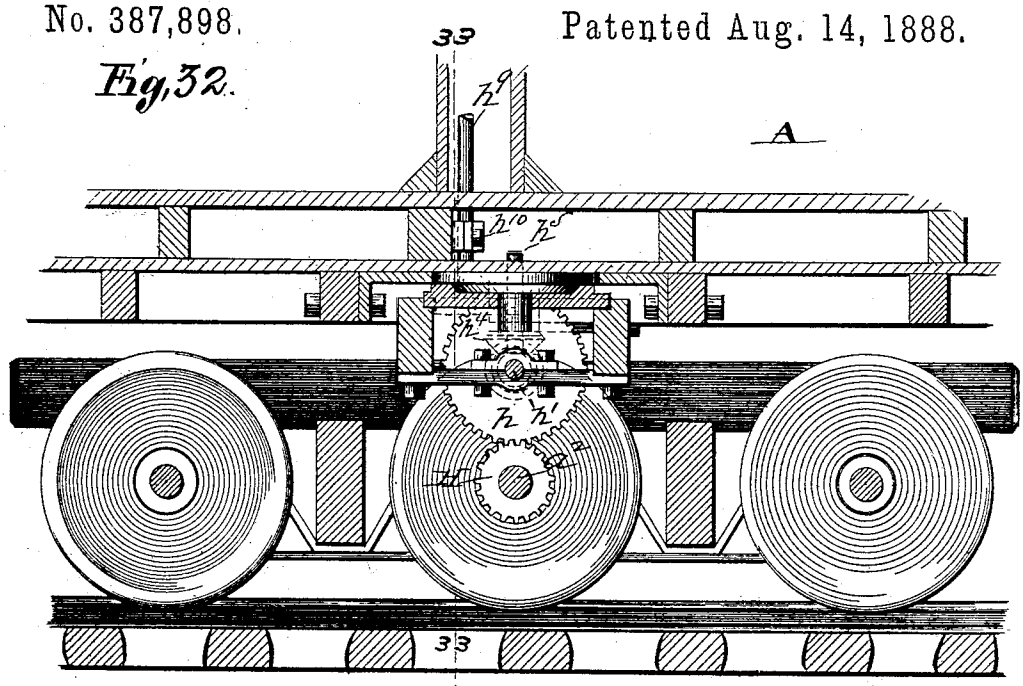

Fig. 33

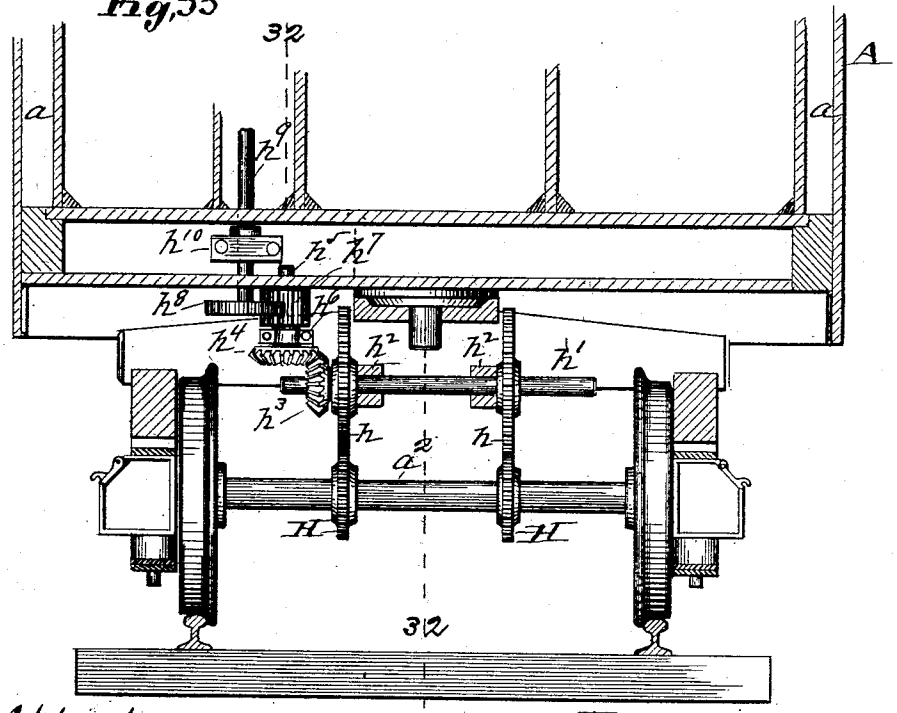

Attest:
W. J. Kesl.
F. W. Sanford

Inventor:
Onesime E. Michaud.
by C. D. Moody.
atty.

N. PETERS, Photo-Lithographer, Washington, D. C.

(No Model.) 12 Sheets—Sheet 9.

O. E. MICHAUD.

RAILWAY PASSENGER MILEAGE REGISTER.

No. 387,898. Patented Aug. 14, 1888.

Fig. 34.

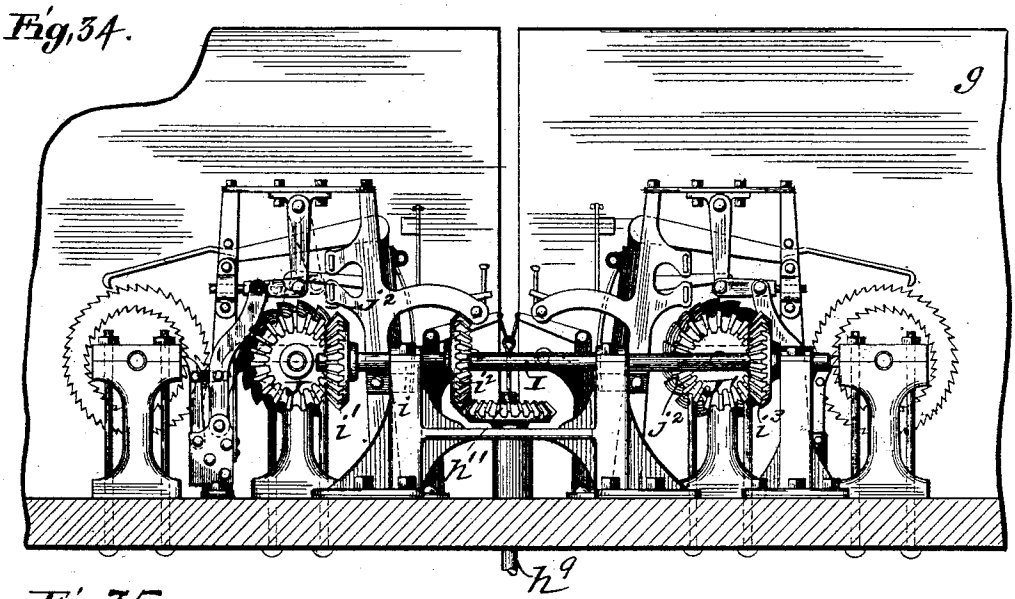

Fig. 35.

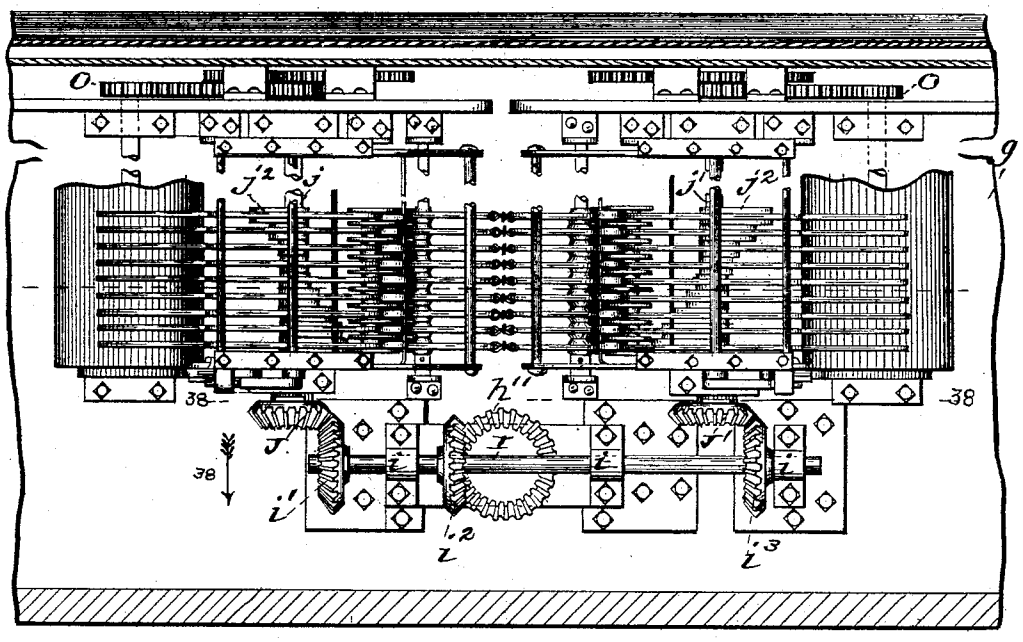

Attest;
W. J. Kesl.
J. W. Stanford.

Inventor;
Onesime E. Michaud,
by C. D. Moody.
atty.

N. PETERS. Photo-Lithographer, Washington, D. C.

(No Model.) 12 Sheets—Sheet 10.

O. E. MICHAUD.

RAILWAY PASSENGER MILEAGE REGISTER.

No. 387,898. Patented Aug. 14, 1888.

Fig. 36.

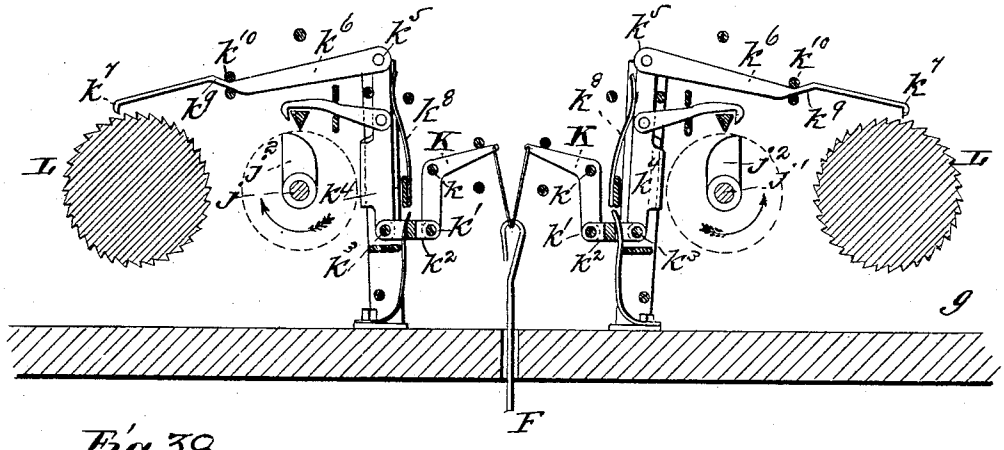

Fig. 38.

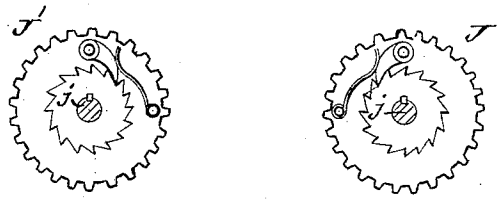

Fig. 37.

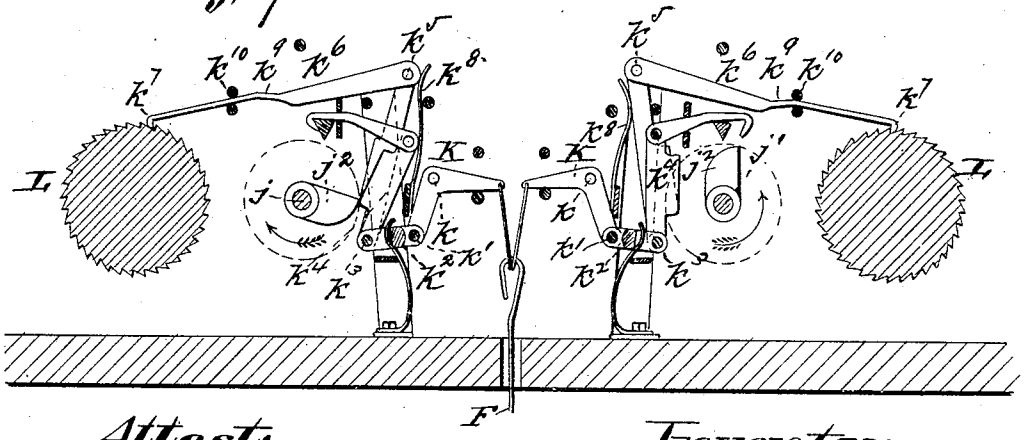

Attest:
W. Kesl
D. Crawford.

Inventor:
Onesime E. Michaud,
by C. D. Moody, atty.

N. PETERS. Photo-Lithographer, Washington, D. C.

(No Model.) 12 Sheets—Sheet 11.

O. E. MICHAUD.

RAILWAY PASSENGER MILEAGE REGISTER.

No. 387,898. Patented Aug. 14, 1888.

Fig. 39.

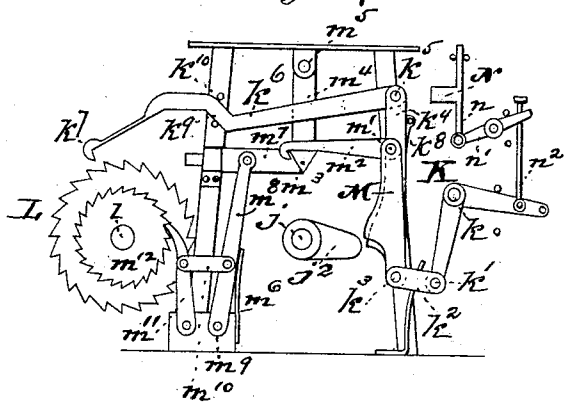

Fig. 40.

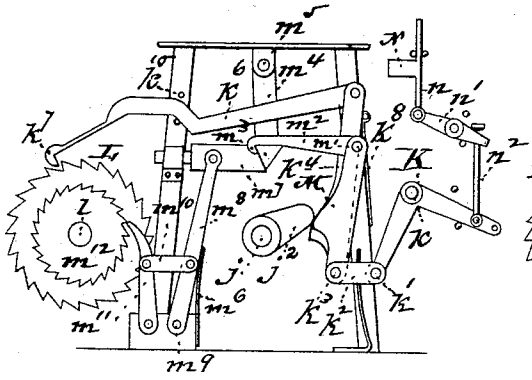

Fig. 42.

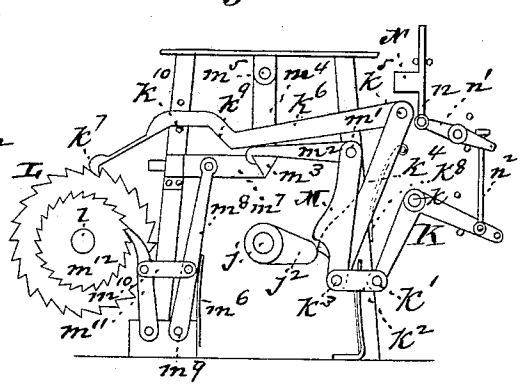

Fig. 41.

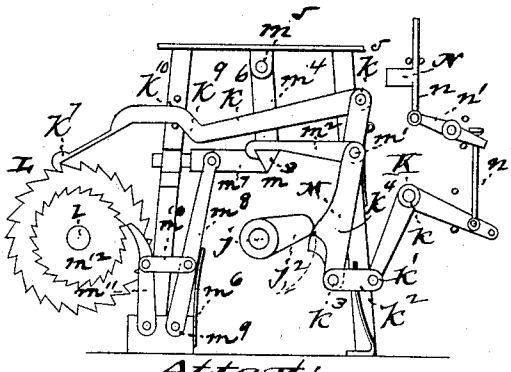

Fig. 43.

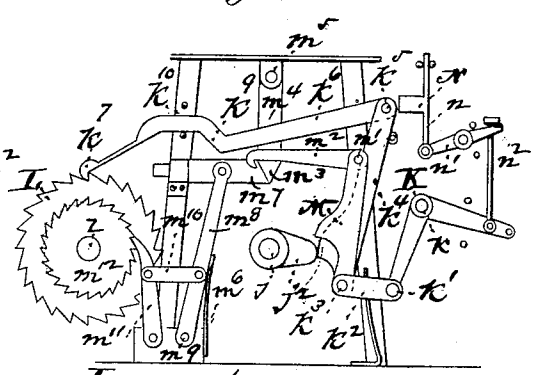

Attest:
W. J. Keil.
C. W. Crawford.

Inventor:
Onesime E. Michaud.
by C. Dunoon, atty.

N. PETERS, Photo-Lithographer, Washington, D. C.

(No Model.) 12 Sheets—Sheet 12.

O. E. MICHAUD.

RAILWAY PASSENGER MILEAGE REGISTER

No. 387,898. Patented Aug. 14, 1888.

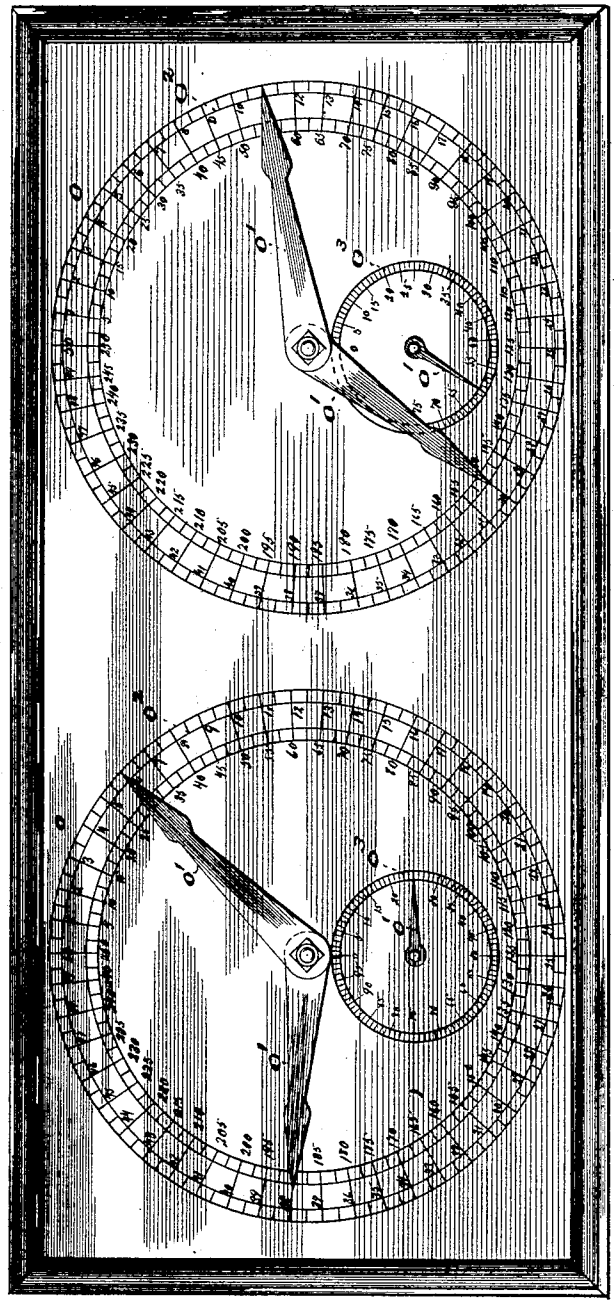

Fig. 44.

Attest:
W. J. Kesl
[illegible]

Inventor:
Onesime E. Michaud.
by
C. D. Moody.
atty.

N. PETERS, Photo-Lithographer, Washington, D. C.

UNITED STATES PATENT OFFICE.

ONESIME E. MICHAUD, OF ST. LOUIS, MISSOURI.

RAILWAY-PASSENGER MILEAGE-REGISTER.

SPECIFICATION forming part of Letters Patent No. 387,898, dated August 14, 1888.

Application filed February 20, 1888. Serial No. 264,548. (No model.)

To all whom it may concern:

Be it known that I, ONESIME E. MICHAUD, of St. Louis, Missouri, have made a new and useful Improvement in Railway-Passenger Mileage-Registers, of which the following is a full, clear, and exact description.

The mechanism which constitutes the subject-matter of the present improvement effects the registration in an aggregate form of the mileages of the passengers upon a railway-car during its trip. First of all, the seats in the car are made adaptable either to a non-paying passenger, to a half-rate passenger, or to a full-rate passenger; second, the adjustment of the seat effects the operation of the registration mechanism, and according to the character of the adjustment is the character of the registration; third, the apparatus for registering the mileages is driven from one of the car-axles; but that portion of it which is immediately used in producing and controlling the registration operates only with and by reason of the use of a seat by a half-rate or a full-rate passenger, and when two or more seats are used their respective mileages are collectively registered; fourth, a minor feature is a provision for indicating the character of the fare being registered.

The most desirable mode of carrying out the improvement is exhibited in the annexed drawings, making part of this specification, in which—

Figure 1 is a central vertical longitudinal section of a passenger-car in which the improvement is embodied; Fig. 2, a horizontal section on the line 2 2 of Fig. 1; Fig. 3, a side elevation of one of the car-seats; Fig. 4, a front elevation of the car-seat; Fig. 5, a plan of the car-seat; Fig. 6, a front elevation of the car-seat adjusted for a half-rate passenger; Fig. 7, a front elevation of the car-seat adjusted for a non-paying passenger; Fig. 8, a view of the frame-work of the upper portion of the car-seat, the back arm being in a vertical position and in side elevation, and the seat being in vertical section; Fig. 9, a view of the parts shown in Fig. 8, the arm being turned down into a horizontal position and the guard being turned around; Figs. 10 to 15, details upon different scales, Figs. 10 and 11 being, respectively, a top view and a side view of the gears at one of the side front corners of the chair-seat and used in operating one of the half-rate guards, Figs. 12 and 13 being, respectively, a side and a top view of the gearing at one of the side rear corners of the chair-seat, Fig. 14 being a view in perspective of one of the double rack-bars used, respectively, at the rear corners and middle of the back of the chair-seat and for transmitting the motion of the back side arm when turned upward and downward, and Fig. 15 being a side elevation of the joint in the back side arm. Fig. 16 is a vertical section on the line 16 16 of Fig. 18, showing the back middle arm turned upward into the plane of the back and the parts within the seat-frame adjusted accordingly, and as when full fare is being collected; Fig. 17, a view similar to that of Fig. 16, but showing the parts as when the middle arm is turned down and as when no registration is to be made. The arm which coacts with the back middle arm is shown upturned. Fig. 18 is a plan of the mechanism contained within the chair-seat beneath its surface. Fig. 19 is a vertical section on the line 19 19 of Fig. 18, the parts being as when full fare is being registered. Fig. 20 is a vertical section on the line 19 19 of Fig. 18, the parts being as when half-fare is being registered; Figs. 21, 22, and 23, details, being vertical sections, upon an enlarged scale, on the line 16 16 of Fig. 18, and showing, respectively, the parts as when no registration is taking place, when full registration is taking place, and when half-registration is taking place; Fig. 24, a horizontal section taken through the car-seat base, showing the connections leading from the chair to the register and indicator, respectively; Figs. 25 and 26, details showing the catch for holding the chair-back arms in a horizontal position; Fig. 27, a view in perspective showing the mechanism used in locking the back arms in a horizontal position. Fig. 28 is a transverse horizontal section of the mechanism last referred to, the back arms being locked; and Fig. 29, a similar section, the back arms being unlocked. Fig. 30 is a view, partly in elevation and partly in section, showing the connections leading from the chair-base to the indicator, which is shown detached, from another point of view and as for half-fare; and Fig. 31, a similar view, but as for full fare; Fig. 32, a vertical longitudinal section of the car-truck,

the section being on the line 32 32 of Fig. 33, and showing the mechanism for communicating the motion of the car-axle to the register. Fig. 33 is a vertical transverse section on the line 33 33 of Fig. 32; Fig. 34, a side elevation of the register; Fig. 35, a plan of the register; Fig. 36, a vertical section on the line 36 36 of Fig. 35, the parts being as for no registration; Fig. 37, a similar section, the parts being as for full registration; Fig. 38, details, being sections on the lines 38 38, Fig. 35, looking in the direction of the arrow 38, that figure; Figs. 39 to 43, views illustrating the escapement mechanism of the register, Fig. 39 showing the parts as when no registration is occurring, Fig. 40 as when registration is about to begin, Fig. 41 a position following that of Fig. 40 and as when full-fare registration takes place, Fig. 42 the next position, the escapement-pawl having become engaged again in its ratchet, and Fig. 43 as when half-rate registration occurs; and Fig. 44, a face view of the register-dials.

The same letters of reference denote the same parts.

A, Figs. 1, 2, represents a passenger-car of the ordinary construction, saving as modified and supplemented by the improvement under consideration.

B B, &c., represent the improved chairs.

The mechanism for driving the register cam-shaft is represented; but in these views the scale is necessarily so limited as to preclude the presentation in detail of the parts referred to.

The seat enlarging and diminishing mechanism.—The car chairs or seats are shown more fully in Figs. 3, 4, 5, 6, 7. The arms b b, as well as the back b', are fixtures upon the seat b^2. The back at each side is provided with an arm, which for convenience may be termed the "back side arm," b^3. It is pivoted at its lower end to the back b' to enable it to be turned upward into the plane of the back b', as shown in Figs. 3, 4, 5, in which position the chair is adjusted to receive a full-rate passenger, or to be turned downward within the fixed arms b b, as shown in Fig. 6, in which position the chair is adjusted to receive a half-rate passenger. There is a part termed a "guard," b^4, which can be made to coact with the back side arm, b^3. When the back side arm is turned down, as described, the guard is thereby turned from its position in or nearly in the plane of the arm b, as in Figs. 3, 4, 5, and made to project transversely beneath the back side arm at the front of the chair-seat, as in Fig. 6. The chair-back b' is also provided with a third arm, termed the "back middle arm," b^5, which, like the arms b^3, is pivoted at its lower end to the back b' to enable it to be turned upward into the plane of the back b', as shown in Figs. 3, 4, 5, when a full-rate or a half-rate passenger is to be seated, or to be turned downward into a horizontal position midway between the arms b b, Fig. 7, in which position the chair is adjusted to receive two non-paying passengers. There can be an arm, b^6, Figs. 4, 5, 7, 10, to coact with the back middle arm. When that arm is turned down, as described, the arm b^6 turns at its lower end (it being attached to the shaft b^{19}) into an upright position, Figs. 7, 17, and thereby the chair-seat is more distinctly divided into two divisions, and, if desired, the arm b^6 can be used by means of the catch b^{39}, Fig. 18, to lock the arm, the catch being adapted to engage with the arm, as indicated in Figs. 25, 26, and in Fig. 4 the openings for the catch are shown. The chair is thus adaptable to full-rate, half-rate, or non-rate passengers.

The mechanism for operating the guard b^4 and arm b^6 is as follows: In Figs. 8, 9, 10, 11 the guard b^4 is shown as a frame not upholstered. At its lower end it is journaled in the chair-seat b^2 and is provided with a bevel-gear, b^8, which engages with a bevel-gear, b^9, upon a horizontal shaft, b^{10}. This shaft b^{10} is suitably journaled and extends backward to the back of the chair, and is there furnished with a pinion, b^{11}, which engages with the lower rack, b^{12}, of the double rack-bar b^{13}, Figs. 8, 9, 14. This rack-bar is flanged at b^{14} and is adapted to be worked upward and downward in a guide, b^{15}, Figs. 13, 18, and it is twisted, as shown, to enable its upper rack, b^{16}, to engage with a pinion, b^{17}, fastened to the journal b^{18} of the side arm, b^3. Said journal, as indicated in Fig. 15, turns with the side arm, and when the side arm is upturned, as in Fig. 8, the pinion b^{17} is thereby rotated and the double rack-bar thereby depressed. The movement is communicated to the shaft b^{10} and gears b^9 b^8, and the guard is in consequence swung around into the position of Fig. 8. When the side arm is turned down, the above-described movement is reversed and the guard is swung outward to project over the chair-seat, as shown in Figs. 6, 9. The arm b^6 (shown not upholstered in Figs. 17, 18) is fastened to a horizontal shaft, b^{19}, that is suitably journaled in the chair-seat, and, extending backward therein and provided with a pinion, b^{20}, which by means of a double rack-bar, b^{13}, and pinion b^{17}, similar to those used in connection with the back middle arm b^3, is connected with the back middle arm b^5, and when the arm b^5 is turned upward, as in Fig. 16, the arm b^6 is turned down into a horizontal position, Fig. 18, and when the arm b^5 is turned down the arm b^6 is raised into an upright position, Fig. 17.

The back-arms-locking mechanism.—As shown in Figs. 8, 9, 27, the double rack-bars are notched at b^{24}. E represents a locking-bar adapted to be put in engagement with this notch. The locking-bar, by means of its vertically-extended arm e, is held in the chair-seat, but so that it can be shifted horizontally in one direction by means of the key e' to engage in the notch of the double rack-bars, and thereby lock them from moving vertically, and in the opposite direction by means of the spring

e^2, and thereby leave the double rack-bars free to be moved vertically. When the double rack-bars are thus locked, the back arms are in consequence also locked in a horizontal position.

The seat mechanism for effecting the operation of the register.—The registration is effected as follows: By means of the back arms when they are upturned the double rack-bars are thereby moved longitudinally downward. This movement, through the pinion b^{20}, is communicated to the shaft b^{19}, causing the shaft to rotate, as indicated by the arrow x, Fig. 19, and the lug b^{25} upon the shaft to encounter and lift the arm C. This arm C forms part of a lever, c, which at c' is journaled upon the bar c^2 and at c^3 is connected with the rod D. When the shaft b^{19} is rotated, as described, the lever c is turned upward on its bearing c', and the rod D in consequence is drawn upward from the position shown in Fig. 21 into its position shown in Fig. 22. The rod D is joined at its lower end to the cords E F, which in turn and respectively lead to the indicator and to the register, and which cords, when the lever c turns, as described, set the registering mechanism in operation and adjust the indicator as for full fare registration. When the back middle arm is turned down, the lever c drops into the position of Figs. 17, 23, and no registration takes place, and the indicator is accordingly adjusted. When the back middle arm is upturned and the back side arms are turned down, the rod D operates to draw the cords upward in the same direction as when full fare is being registered. The cords, however, are not drawn upward as far, and but half-fare registration in consequence takes place. This partial raising of the rod D and cords is effected as follows: The side arm, b^3, through its double rack-bar b^{13}, causes the shaft b^{10} to be rotated in the direction of the arrow y, Fig. 19, and in so doing the lug b^{26} upon the shaft b^{10} is removed upward from its bearing upon the free end c^4 of the bar c^2, and that free end springs upward, and the bearing c' of the lever c upon the bar c^2 is thereby raised, as shown in Fig. 23, and the outer end of the lever c and the rod D in consequence are not raised as high by the upturning of the back middle arm as they were with the back side arm upturned. The rod D is located centrally in the chair-base and held freely in the lever c, to provide for the rotation of the car-seat.

The indicator is shown in Figs. 24, 30, 31. The cord E, which leads from the rod D, Fig. 16, is carried downward through the chair-base b^{27}, where it passes around a pulley, e. It is then carried to the side of the car and around the pulley e', and is thence carried upward through the car-side a to connect with the sign e^2, which bears at different elevations thereon the inscription "Half-Fare," e^3, "Full Fare," e^4, or equivalent words, and it may also have a blank space, e^5, which, when no registration is occurring, comes opposite the opening e^6 in the car-side. When half-fare is being registered, the sign is drawn downward to bring the "Half-Fare" into view at the opening e^6, and when full fare is being registered the sign is drawn farther downward to expose the "Full Fare" at the opening e^6. There is a similar indicator for each car-seat. The spring e^7 acts to raise the sign again. The cord F, which communicates the motion of the rod D to the register G, is also carried downward through the chair-base, around the pulley f, Fig. 24, thence around a pulley, f', at the side of the car, and thence in any suitable manner to the immediate region of the register, with which it connects, as is hereinafter explained.

The car-axle mechanism for driving those parts of the register which are constantly in motion as long as the car moves is shown in Figs. 32, 33. The car-axle a^2 is provided with one, and preferably with two, pinions, H H, which engage with the gears h h upon a horizontal shaft, h', which is journaled in suitable bearings, h^2, upon the car-truck, and is also provided with a bevel-pinion, h^3. That pinion in turn is in engagement with the bevel-pinion h^4 upon the vertical shaft h^5, journaled in a bearing, h^6, upon the car-truck, and provided also with a vertically-elongated pinion, h^7, which engages with a gear, h^8, upon a vertical shaft, h^9, journaled in bearings h^{10} upon the car-body.

The elongated pinion provides for keeping the gear h^8 in engagement during the vertical oscillation of the car-body. The vertical shaft h^9 extends upward in the car-body and passes into the register-case g, Figs. 34, 35, and at its upper end it is provided with a bevel-gear, h^{11}. A horizontal shaft, I, journaled in bearings i, is provided with three bevel-pinions, i' i^2 i^3. The gear h^{11} engages with the middle pinion, i^2, and the two pinions i' i^3 engage, respectively, with the bevel-pinions J J', and thereby cause the rotation of the cam-shafts j j', to which the pinions J J' are respectively attached.

The register mechanism is in duplicate, dividing on the line of the shaft h^9. The right-hand half is for use when the car is traveling in one direction and that on the left-hand side is for use when the car is traveling in the opposite direction. The left-hand side will be described. The cam-shaft j is provided with as many cams j^2, Figs. 34, 35, as there are car-seats, and they are set around the shaft j so that no two cams project in the same plane—that is, if there are sixty car-seats and sixty cams each cam can have appropriated to it a six-degree field, in which, in the rotation of the cam-shaft, its cam can operate. The cam-shaft j rotates continuously as long as the car is traveling forward. Its cams, however, have no function to perform and they encounter no obstruction in their rotation, saving when the car-seats are used; but when a car-seat is occupied—say by a half-rate passenger—the cam belonging to that car seat is brought into use

and the registration of the mileage of its passenger is initiated and in the following manner:

F, Figs. 16, 24, represents the cord leading from the car-seat, as previously described, and ultimately passing upward into the register-case *g*, Figs. 36, 37, where it is made to connect with a bell-crank, K, pivoted at *k* and at *k'* jointed to a link, k^2, which in turn at k^3 is jointed to an arm, k^4. There is a cord, F, for each car-seat in the car, and each cord is similarly connected with a bell-crank, &c., as above described. The arm k^4 at its lower end is jointed to the link k^2 at k^3, and at its upper end, k^5, the arm has jointed to it a spring-hook, k^6, whose point k^7 is adapted to engage with the ratchet-drum L, Figs. 35, 36, 37. The upper end of the arm k^4 is pressed toward the ratchet-drum by means of a spring, k^8. The spring-hook k^6 at k^9 is beveled or shaped to work through a bearing, k^{10}, so that when the spring-hook is moved toward the ratchet-drum the hook-point springs upward and is disengaged from the ratchet-drum, as in Fig. 36, and when the spring-hook is drawn backward its point shall engage with the ratchet-drum, as in Fig. 37. When it is so drawn backward, the ratchet-drum is rotated. The spring-hook is drawn backward by the operation of the cam belonging to that spring-hook, arm k^4, and bell-crank K—that is, the cam j^2 in its rotation, and as indicated in Fig. 37, encounters the arm k^4 and presses its upper end from the ratchet-drum L. The cord F is drawn downward according to the upward movement of the rod D in the car-seat—that is, for a non-paying passenger the cord is not drawn downward in the register-case, and for a half-rate passenger the cord is drawn downward less than for a full-rate passenger. The position of the end of the bell-crank K and of the link k^2 and of the lower end of the arm k^4 is consequently changed according to the character of the rate. For a non-paying passenger, or when the car-seat is not occupied, the bell-crank, link, and arm are so placed that the spring-hook does not engage with the ratchet-drum. For a half-rate passenger the parts are so placed that the spring-hook k^6 acts to effect the rotation of the ratchet-drum the distance of one tooth. For a full-rate passenger the parts are so adjusted that the spring-hook acts to effect the rotation of the ratchet-drum a distance of two teeth, or twice as far around for every rotation of the cam-shaft *j* as for a half-rate passenger. There is a spring-hook, k^6, for each cam and car-seat, and hence the ratchet-drum is acted upon by as many spring-hooks as there are car-seats being occupied by paying passengers.

The register-escapement.—The regulation of the rotation of the ratchet-drum, so that under the impulse of the spring-hook k^6 it shall not be carried around too far, is an essential feature of the improvement. To this end an escapement mechanism, substantially as follows, is adopted: A lever, M, is jointed at k^3 to the link k^2, Figs. 39, 43. The lever M at *m'* is jointed to a hook, m^2, whose point is adapted to engage with a shoulder, m^3, upon an arm, m^4, pivoted at m^5. The spring m^6 acts to draw, as hereinafter described, the lever M toward the arm m^4, and the cam j^2 in its rotation encounters the lever M and presses it in the opposite direction. The lever M is so shaped and held that the cam j^2 encounters it before it (the cam) encounters the arm k^4, and when the cam encounters it the lever M is thereby pressed from the arm m^4. The hook m^2 therefore acts to draw the arm m^4 from its position in Fig. 39 first into the position of Fig. 40 and then into the position of Fig. 41. The arm m^4, by means of the rod m^7, is connected with the lever m^8, which is pivoted at m^9, and by means of the link m^{10} connected with the pawl m^{11}. This pawl coacts with the ratchet m^{12} upon the ratchet-drum L, and when it is in engagement with the ratchet m^{12} the ratchet-drum cannot be rotated; but when the lever M is drawn, as described, the pawl is disengaged from the ratchet m^{12} and the ratchet-drum is free to be rotated. In this position of the lever M the cam begins to bear upon and press backward the arm k^4, and it continues to press that arm backward, and thereby effect the rotation of the ratchet-drum, until the cam has passed the projection of the arm k^4, whereupon the arm k^4 is released to be restored to its original position, and meanwhile the lever M is released and the springs m^6 k^8 have acted to put the pawl m^{11} into engagement again with the ratchet m^{12}.

Fig. 39 shows the parts as when no registration is occurring, Fig. 40 as when the registering is about to be initiated, Fig. 41 as when full fare is being registered, Fig. 42 as when full fare is just completed, and Fig. 43 as when half-fare registering is being effected, for, owing to the fact that the joint *k'* occupies a different position when half-fare registering is occurring, the pawl m^{11} is not kept so long out of engagement with the ratchet m^{12}, and the ratchet-drum in consequence is rotated but half as far around. To prevent the spring-hook k^6 from being accidentally drawn backward too violently and the ratchet-drum thereby, when half-fare is being registered, rotated too far, a stop, N, Figs. 39, 43, is employed. This stop, by means of the rod *n*, lever *n'*, rod n^2, and bell-crank K, is connected with the link k^2 at *k'*, and so that when the link k^2 is adjusted for half-fare the stop is held in position for the spring-hook k^6 to encounter it; but when the link k^2 is adjusted for full fare the stop N is moved to be out of the way of the spring-hook, which therefore can be moved farther backward.

The dial.—It only remains to connect the ratchet-drum shaft *l* with a suitable mechanism—such as the train O, Fig. 35—and that in turn with a suitable dial, *o*, hands *o'*, and graduations o^2 o^3, suitably marked, and, in combination therewith, to properly proportion the train connecting the car-axle with the

cam-shaft to enable the desired registration to be produced upon the dial. The back b' of the car-chair, as shown in Fig. 3, can be inclined, to which end the back, by any suitable hinges at its lower end, (not shown,) can be adapted to be turned backward and downward and forward and upward, and by means of the rods b^{30} and racks b^{40} be held at the desired inclination. The rods b^{30} are arranged, respectively, at the sides of the chair, and are provided with a pin, b^{50}, which engages with the rack b^{40}, and the rods can be secured so that the pin shall not be dislodged from the rack by means of a screw, b^{60}, working upward through the fixed arm of the chair, and adapted to engage with the rod. An electric wire can be used in the place of the cord F or E to communicate the movement of the rod D to the register or indicator.

I claim—

1. In a railway passenger-car, the combination of a mileage-register and a car-seat provided with a movable part, and a connection leading from such movable part to said register, substantially as described.

2. The combination of a passenger-car, a mileage-register, and a train of gearing connecting the car-axle with the mileage-register, substantially as described.

3. The combination, in a railway passenger-car, of a mileage-register, a car-seat provided with a movable part, a connection leading from such movable part to said register, and a train of gearing connecting the car-axle with said register, substantially as described.

4. A railway passenger-car seat provided with one or more arms which can be turned downward to narrow the car-seat, in combination with a mileage-register and a connection leading from said register to a movable part in said car-seat, substantially as described.

5. A railway passenger-car seat provided with the arms b^3, in combination with a mileage-register and a connection leading from said register to a movable part in said car-seat, substantially as described.

6. A railway passenger-car seat provided with the arm b^5, in combination with a mileage-register and a connection leading from said register to a movable part in said car-seat, substantially as described.

7. A railway passenger-car seat provided with the arms b^3 and the arm b^5, in combination with a mileage-register and a connection leading from said register to a movable part in said car-seat, substantially as described.

8. The combination of the chair-back, the fixed arm b, the arm b^3, and the guard b^4, and the mileage-register, and a connection leading from said register to a movable part in the car-seat, substantially as described.

9. The combination of the chair-seat, the chair-back, the arm b^5, and the arm b^6, and the mileage-register, and a connection leading from said register to a movable part in the car-seat, substantially as described.

10. The combination of the chair-seat, the chair-back, the arm b^5, and the arm b^6, having the catch b^{39}, and the mileage-register, and a connection leading from said register to a movable part in the car-seat, substantially as described.

11. The combination of the chair-seat, the chair-back, the arm b^3, the gears b^8 b^9 b^{11} b^{17}, the shaft b^{10}, and the rack-bar b^{13}, and the mileage-register, and a connection leading from said register to a movable part in the car-seat, substantially as described.

12. The combination of the chair-back, the chair-seat, the arm b^3, the pinion b^{17}, and the rack-bar b^{13}, and the mileage-register, and a connection leading from said register to a movable part in the car-seat, substantially as and for the purpose set forth.

13. The combination of the chair-seat, the fixed side arm, b, and the adjustable guard b^4, and the mileage-register, and a connection leading from said register to a movable part in the car-seat, substantially as described.

14. The combination of the chair-seat, the chair-back, the arm b^5, the pinions b^{17} b^{20}, the rack-bar b^{13}, and the shaft b^{19}, and the mileage-register, and a connection leading from said register to a movable part in the car-seat, substantially as described.

15. The combination, in the car-seat, of the notched rack-bars b^{13} and the locking-bar E, and the mileage-register, and a connection leading from said register to a movable part in the car-seat, substantially as described.

16. The combination, in the car-seat, of the rack-bars b^{13}, the locking-bar, the key e', and the spring e, and the mileage-register, and a connection leading from said register to a movable part in the car-seat, substantially as described.

17. The combination, in the car-seat, of the arm b^5, the pinion b^{20}, the shaft b^{19}, the lug b^{25}, the arm C, the pinion b^{17}, and the rack-bar b^{13}, and the mileage-register, and a connection leading from said register to a movable part in the car-seat, substantially as described.

18. The combination of the shaft b^{19}, the lug b^{25}, the arm C, the lever c, the bearing c', and the rod D, substantially as described.

19. The combination of the car-seat and the vertically-movable rod D, substantially as and for the purpose set forth.

20. The combination of the car-seat, the vertically-movable rod D, and the cord E, as described.

21. The combination of the car-seat, the vertically-movable rod D, and the cord F, substantially as described.

22. The combination of the car-seat, the vertically-movable rod D, and the cords E and F, substantially as described.

23. The combination of the arm b^3, the rack-bar b^{13}, the shaft b^{10}, the lug b^{26}, and the journaled spring-bar c^2, substantially as described.

24. The combination of the shafts b^{19} b^{10}, the lugs b^{25} b^{26}, the journaled spring-bar c^2, the lever c, the arm C, and the rod D, substantially as described.

25. The rod D, held freely in the lever *c*, to enable the car-seat to be rotated around the said rod, substantially as described.

26. The combination of the car, the car-seat, the rod D, the cord E and its bearings, and the spring e^7, and sign e^2, substantially as described.

27. The combination of the car, the car-seat, the rod D, the cord F and its bearings, and the mileage-register, substantially as described.

28. The combination of the car, the pinions H H, the gears *h h*, the shaft *h'*, the pinions h^3 h^4, the shaft h^5, the pinion h^7, the gear h^8, and the shaft h^9, substantially as described.

29. The combination of the car-body, the car-truck, the elongated pinion h^7, and the gear h^8, substantially as described.

30. The combination of the shaft h^9, the gear h^{11}, the shaft I, the pinions i' i^2 i^3, and the pinions J J', substantially as and for the purpose described.

31. The combination of the car and the mileage-register, said register being in duplicate, as and for the purpose described.

32. The cam-shaft *j*, provided with the cams j^2, set around said shaft, as described.

33. The combination of the cord F, the bell-crank K, the link k^2, the arm k^4, the cam-shaft *j*, and the cam j^2, as described.

34. The combination of the bell-crank K, the link k^2, the arm k^4, the spring-hook k^6, the spring k^8, the ratchet-drum L, the cam-shaft, and the cam, substantially as described.

35. The combination of the spring-hook k^6, the bearing k^{10}, and the ratchet-drum, substantially as described.

36. The combination of the bell-crank K, the link k^2, and the pivoted arm k^4, as and for the purpose described.

37. The combination of the ratchet-drum and the spring-hook, substantially as described.

38. The combination of the lever M, the link k^2, the hook m^2, the shoulder m^3, the pivoted arm m^4, the spring m^6, and the cam-shaft and cam, substantially as described.

39. The combination of the arm m^4, the rod m^7, the lever m^8, the link m^{10}, the pawl m^{11}, the ratchet m^{12}, and the ratchet-drum L, substantially as described.

40. The combination of the ratchet-drum L, the ratchet m^{12}, the pawl m^{11}, and the spring-hook k^6, substantially as described.

41. In the mileage-register, the joint k', made movable toward and from the cam-shaft, as and for the purpose described.

42. The combination of the spring-hook k^6 and the adjustable stop N, as and for the purpose described.

43. The combination of the cam-shaft *j*, the train O, and the dial *o*, hands *o'*, and graduations, substantially as described.

Witness my hand.

ONESIME E. MICHAUD.

Witnesses:

C. D. MOODY,

A. M. EVERIST.