United States Patent [19]

Washio et al.

[11] **3,876,300**

[45] **Apr. 8, 1975**

[54] **COPYING MACHINE EQUIPPED WITH SYNCHRONOUSLY EXPOSING MECHANISM AND ADAPTED FOR USE OF SHEET-LIKE SENSITIVE PAPER**

[75] Inventors: **Takaji Washio**, Toyonaka; **Tadanobu Nakajima**, Osaka; **Hideo Miyoshi**, Habikino; **Tatsuo Aizawa**, Osaka, all of Japan

[73] Assignee: **MITA Industrial Company Limited**, Osaka, Japan

[22] Filed: **July 16, 1973**

[21] Appl. No.: **379,490**

[52] **U.S. Cl.** **355/12**; 355/11; 355/14; 355/97

[51] **Int. Cl.** **G03g 15/00**

[58] **Field of Search** ..... 355/97, 99, 11, 12, 14, 355/66, 3 R, 100, 101, 103; 271/9

[56] **References Cited**

UNITED STATES PATENTS

3,595,561	7/1971	Lebiant	355/97 X
3,684,367	8/1972	Vassitch	355/11
3,743,406	7/1973	Komori et al.	355/11 X

Primary Examiner—Richard L. Moses

Attorney, Agent, or Firm—Sherman & Shalloway

[57] **ABSTRACT**

A copying machine comprising an original detecting member upstream of an original-exposing section and a sensitive paper detecting member upstream of a sensitive paper-exposiing section in order to cause both an original and sensitive paper to reach the exposing sections synchronously. The machine also includes a mechanism whereby either the original or the sensitive paper which reaches the detecting member earlier is stopped there temporarily, and when the other late-coming original or sensitive paper has reached the detecting member, the advance of the earlier-reaching original or sensitive paper is resumed.

14 Claims, 7 Drawing Figures

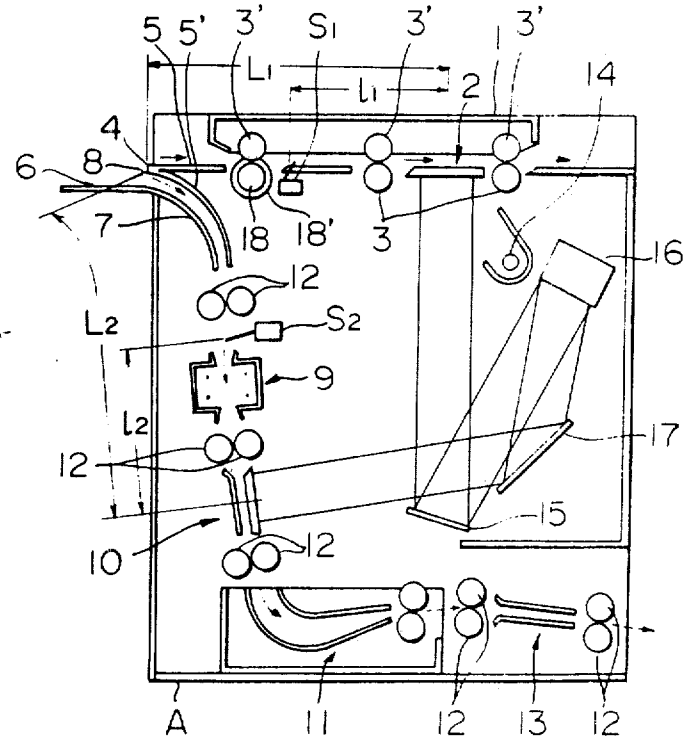

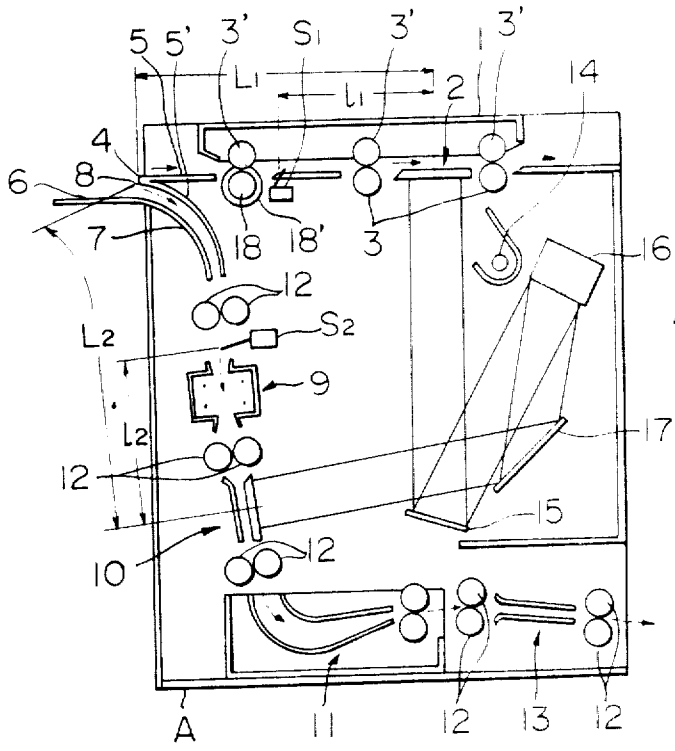
5
5'
3'
S1
3'
3'
L1
l1
2
14
4
6
8
7
18
18'
3
16
12
S2
L2
9
L2
17
12
15
10
12
A
11
12
13
12

Fig. 1

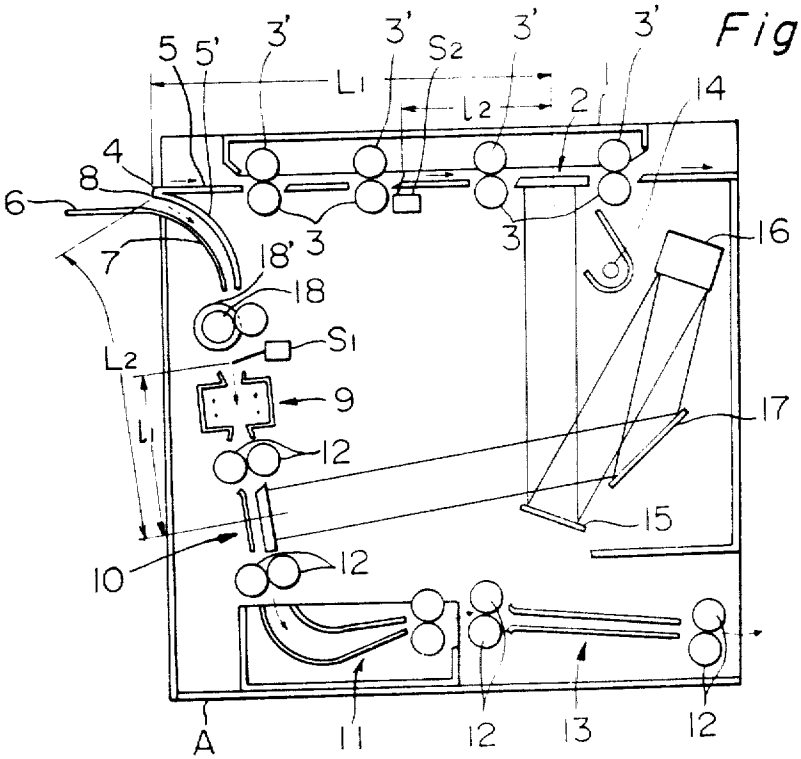
5
5'
3'
3'
S2
3'
3'
L1
l2
2
14
4
8
6
7
18'
3
3
16
18
S1
L2
9
17
l1
12
15
10
12
A
11
12
13
12

Fig. 2

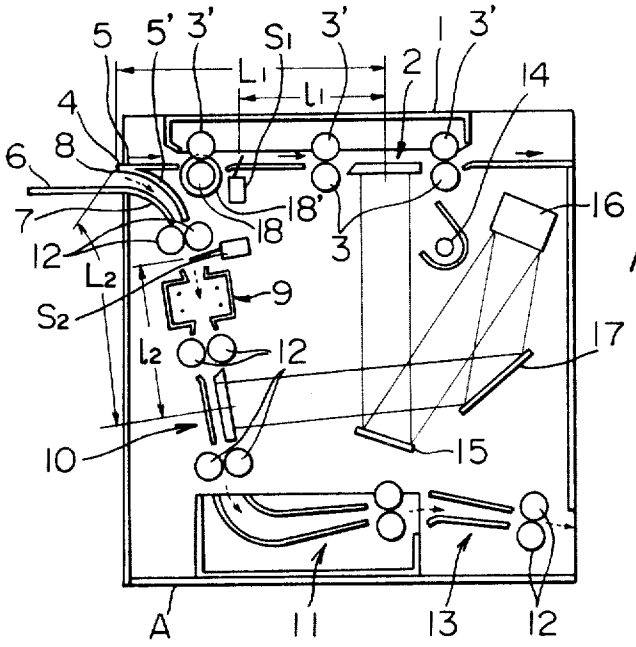
5
5'
3'
S1
3'
1
3'
L1
l1
2
14
4
8
6
7
12
L2
S2
18'
18
3
16
9
l2
12
17
10
15
A
11
13
12

Fig. 3

Fig. 4

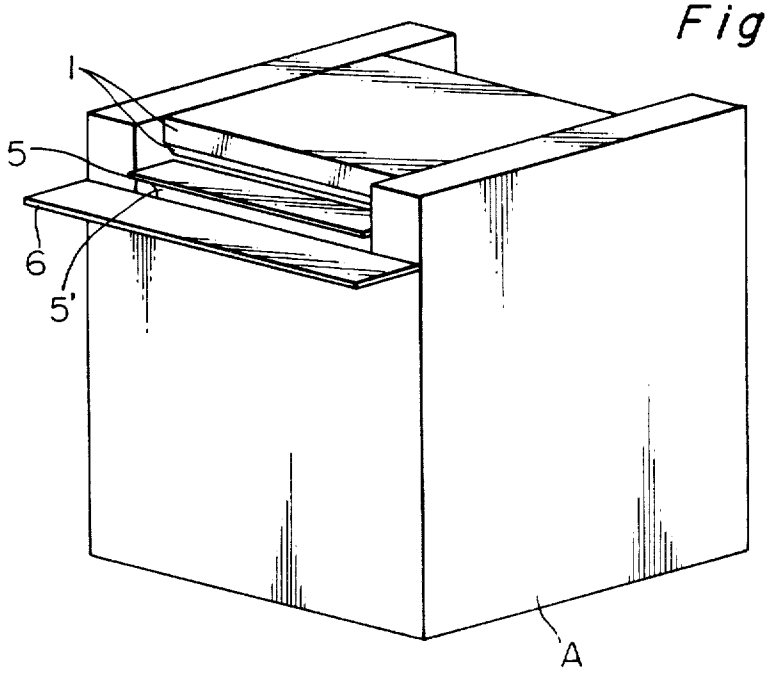
1
5
6
5'
A

Fig. 5

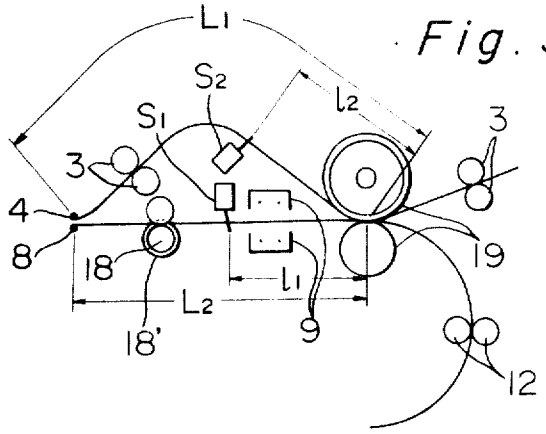

Fig. 6

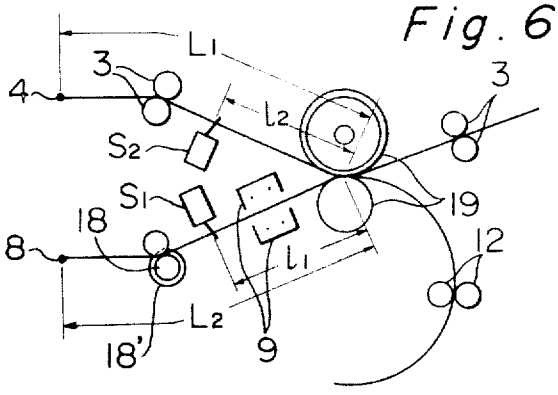

Fig. 7

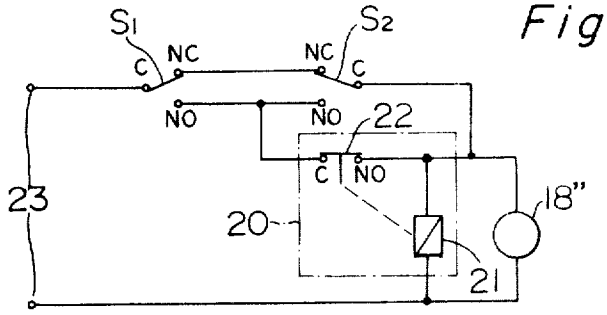

COPYING MACHINE EQUIPPED WITH SYNCHRONOUSLY EXPOSING MECHANISM AND ADAPTED FOR USE OF SHEET-LIKE SENSITIVE PAPER

BACKGROUND OF THE INVENTION

1. Field of the Invention

This invention relates to a copying machine equipped with a mechanism for synchronously exposing an original and a sheet-like sensitive paper. More specifically, the invention relates to a mechanism for causing both the original and the sheet-like sensitive paper to reach the respective exposing sections or the common exposing section through separate transfer passageways.

2. Technical Considerations and Prior Art

In the conventional copying apparatus, the original transfer passageway and the sensitive paper transfer passageway are constructed such that the distance between the feeding end and the center of the exposing section is the same for both of these transfer passageways in order to expose both the original and the sheet-like sensitive paper synchronously. In operation, it is necessary to register the leading edges of the original and the sensitive paper exactly, and feed them synchronously from the feeding ends of the respective transfer passageways. However, generally the minimum distance required between the original feeding end and the original exposing section is not equal to the minimum distance required between the sensitive paper feeding end and the sensitive paper exposing section, and if attempt is made to equalize these distances, the copying machine on the whole tends to become larger. For example, in an electrophotographic copying machine the minimum distance required between the feeding end of the sensitive paper transfer passageway and the center of the exposing section is longer than that in the original transfer passageway, because it requires a charging device. In order to equalize the distances, it is necessary to make the original transfer passageway longer, and this is not desirable for providing a compact copying machine.

Furthermore, since with the conventional copying machine, it is necessary to feed an original and a sensitive paper synchronously with their leading edges being registered, this involves complexity in operation. Especially when it is desired to copy a large-sized original, the above operation is extremely difficult, and there is a tendency toward deviation between the leading edges of the original and the sensitive paper.

SUMMARY OF THE INVENTION

It is an object of this invention to provide a mechanism whereby an original and sensitive paper can be synchronously exposed even when the distance between the feeding end of an original transfer passageway and the center of the original exposing section is not equal to the distance between the feeding end of a sensitive paper transfer passageway. This enables the transfer passageways to be constructed in a minimum required size and makes it possible to provide a more compact copying machine.

Another object of this invention is to provide a copying machine whereby a deviation-free copied image can be obtained even when the leading edges of an original and sensitive paper deviate at the time of feeding.

Still another object of this invention is to provide a synchronously exposing mechanism whereby one of an original and sensitive paper is first fed into a transfer passageway therefor, and then the other is fed into its own transfer passageway. This makes it possible to give a deviation-free copied image even with a large-size original.

A further object of this invention is to provide a copying machine whereby an accurate copying operation can be performed by a simple mechanism.

According to the present invention, there is provided a copying machine comprising an original transfer passageway, an original exposing section alongside said passageway, a mechanism for transferring the original at a predetermined speed from the original feeding end of said transfer passageway through said exposing section, a sensitive paper transfer passageway, a sensitive paper exposing section alongside said transfer passageway, a mechanism for transferring a sheet-like sensitive paper at the same speed as the speed of transferring the original through said sensitive paper exposing section from the feeding end of the sensitive paper transfer passageway, a first detecting member located along one of said transfer passageways and upstream of the exposing section therefor by a predetermined distance, a synchronously transferring roller located further upstream of said detecting member, said roller being capable of stopping its rotation temporarily, and a second detecting member located along the other transfer passageway and upstream of the exposing section therefor by the same distance as the upstream distance of the first detecting member; said synchronously transferring roller stopping its rotation when the leading edge of the original or the sensitive paper has reached the first detecting member and resuming its rotation when the leading edge of the sensitive paper or the original has reached said second detecting member, and the distance between the feeding end of said one transfer passageway and the center of the exposing section therefor being shorter than the distance between the feeding end of said other transfer passageway and the center of the exposing section therefor.

In another aspect of this invention, there is provided a copying machine comprising an original transfer passageway, an original exposing section alongside said passageway, a mechanism for transferring the original at a predetermined speed from the original feeding end of said transfer passageway through said exposing section, a sensitive paper transfer passageway, a sensitive paper exposing section alongside said transfer passageway, a mechanism for transferring a sheet-like sensitive paper at the same speed as the speed of transferring the original through said sensitive paper exposing section from the feeding end of the sensitive paper transfer passageway, a first detecting member located along one of said transfer passageways and upstream of the exposing section therefor by a predetermined distance, a synchronously transferring roller located further upstream of said detecting member, said roller being capable of stopping its rotation temporarily, and a second detecting member located along the other transfer passageway and upstream of the exposing section therefor by the same distance as the upstream distance of the first detecting member; said synchronously transferring roller stopping its rotation when the leading edge of the original or the sensitive paper has reached the first detecting member and resuming its rotation when the

leading edge of the sensitive paper or the original has reached said second detecting member, and the original or the sensitive paper being first fed into said one transfer passageway and then the sensitive paper or the original is fed into the other transfer passageway.

The other objects of this invention will become apparent from the accompanying drawings in which:

BRIEF DESCRIPTION OF THE DRAWINGS

FIG. 1 is a sketch of a copying machine in accordance with one embodiment of this invention, in which the distance between the feeding end of an original transfer passageway and the center of an original exposing section is shorter than the distance between the feeding end of a sensitive paper transfer passageway and the center of a sensitive paper exposing section;

FIG. 2 is a sketch of a copying machine in accordance with another embodiment of this invention, in which the distance between the feeding end of a sensitive paper transfer passageway and the center of a sensitive paper exposing section is shorter than the distance between the feeding end of an original transfer passageway and the center of an original exposing section;

FIG. 3 is a sketch of a copying machine of the type wherein an original is first fed into an original transfer passageway, and then a sensitive paper is fed into a sensitive paper transfer passageway;

FIG. 4 is a perspective views of the copying machines shown in FIGS. 1, 2 and 3;

FIG. 5 is a sketch of the principal parts of a copying machine equipped with a contact-exposing device common for an original and a sensitive paper, in which a sensitive paper transfer passageway is constructed in a length shorter than an original transfer passageway;

FIG. 6 is a sketch of the principal parts of a copying machine having a common contact-exposing device as in FIG. 5; and

FIG. 7 is a diagram showing an example of an electrical control circuit for the copying apparatus in accordance with the present invention.

DETAILED DESCRIPTION

Referring to FIG. 1 which shows a synchronously exposing mechanism in accordance with this invention, the frame A of an electrophotographic copying machine includes an original transfer passageway (an arrow shown in a solid line), and a sensitive paper transfer passageway (an arrow shown by a broken line). The original transfer passageway is constructed of a plurality of normally driven transfer rollers 3 for transferring an original at a predetermined speed from an original feeding end 4 through an original exposing section 2 equipped with a transparent plate, a transfer assisting device 1 equipped with follow-up rollers 3' and being removable when a thick original is to be transferred, and a synchronously transferring roller 18 to be described hereinafter. The sensitive paper transferring passageway consists of a plurality of normally driven rollers 12 for transferring a sensitive paper at the same speed as the speed of transferring the original from a sensitive paper feeding end 8 through a guiding bended plate 7, a charging device 9, a sensitive paper exposing section 10 equipped with a transparent plate, a developing device 11 and a fixing and drying area 13. A sensitive paper receiving plate 6 is provided upstream of the feeding end of the sensitive paper transfer passageway. The frame A also includes an optical system for projecting the image of an original on the sensitive paper which consists of a lamp 14, reflecting mirrors 15 and 17, and an in-mirror lens 16.

The charging device 9, the optical system, and the developing device 11 may be of any known types.

In the embodiment shown in FIG. 1, the original transfer passageway is constructed such that the distance L_1 between the original feeding end 4 and the center of the original exposing section 2 is shorter than the distance L_2 between the sensitive paper feeding end 8 and the center of the sensitive paper exposing section 10. In this embodiment, a first detecting member S_1 is provided along the original transfer passageway and upstream of the original exposing section 2 by the distance l_1, and the synchronously transferring roller 18 is disposed further upstream of the first detecting member S_1. Along the sensitive paper transferring passageway, a second detecting member S_2 is provided upstream of the sensitive paper exposing section 10 by the distance l_2 which is equal to the distance l_1. The detecting member S_1 is a switch of any desired type operable by an original, for example, a microswitch, and when the leading edge of the original has reached the position of the detecting member S_1, it temporarily stops the rotation of the transferring roller 18. The detecting member S_2 is a switch of any desired type operable by a sensitive paper, for example, a microswitch, and when the leading edge of the sensitive paper has reached the detecting member S_2, it resumes the rotation of the transferring roller 18 which has been temporarily stopped by the action of the first detecting member S_1. The synchronously transferring roller 18 is equipped with an electromagnetic clutch 18' and its rotation can be stopped independently of the other transfer rollers 3.

The operation of the synchronizing mechanism described above is as follows: An original and sensitive paper are fed into the respective transfer passageways almost synchronously. Since the distance between the original feeding end 4 and the first detecting member S_1 is shorter than the distance between the sensitive paper feeding end 8 and the second detecting member S_2, the original first reaches the first detecting member S_1, and then the sensitive paper reaches the second detecting member S_2. When the leading edge of the original reaches the first detecting member S_1, the transferring roller 18 stops its rotation. As a result, the transfer of the original is stopped, and the original remains there until the sensitive paper reaches the second detecting member S_2. When the leading edge of the sensitive paper reaches the second detecting member S_2, the synchronously transferring roller 18 resumes its rotation, and the transferring of the original is resumed at the position of the first detecting member S_1. As the distance l_1 between the first detecting member S_1 and the center of the original exposing section 2 is equal to the distance l_2 between the second detecting member S_2 and the center of the sensitive paper exposing section 10, the original and the sensitive paper reach the respective exposing sections synchronously.

FIG. 2 shows a copying machine in which the distance L_2 between the feeding end 8 of the sensitive paper transfer passageway and the center of the sensitive paper exposing section 10 is shorter than the distance L_1 between the feeding end 4 of the original

transfer passageway and the center of the original exposing section **2**.

In this embodiment, for synchronous exposure, the first detecting member S_1 is provided along the sensitive paper transfer passageway and upstream of the sensitive paper exposing section **10** by the distance l_1 and the synchronously transferring roller **18** is provided further upstream of the first detecting member S_1. The second detecting member S_2 is provided along the original transfer passageway and upstream of the original exposing section **2** by the distance l_1.

The operation of the above synchronizing mechanism is as follows: When an original and a sensitive paper are fed into the respective transfer passageways substantially synchronously, the leading edge of the sensitive paper first reaches the first detecting member S_1 and the transferring roller **18** stops its rotation. Consequently, the transfer of the sensitive paper is stopped, and the paper remains there until the original reaches the second detecting member S_2. When the leading edge of the original reaches the second detecting member S_2, the rotation of the transferring roller **18** is resumed, and the transfer of the sensitive paper is resumed at the position of the first detecting member S_1. Thus, the original and the sensitive paper reach the respective exposing sections synchronously.

In the embodiment shown in FIG. **2**, the first detecting member S_1 is preferably provided upstream of the charging device **9** in order not to cause non-uniformity of charging as a result of the stopping of the sensitive paper in the charging device **9**.

FIG. **3** shows a copying machine of the type wherein an original is first fed into an original transfer passageway and then a sensitive paper is fed into a sensitive transfer passageway.

In this embodiment, for synchronous exposure, the first detecting member S_1 is provided upstream of the original exposing section **2** by the distance l_1 along the original transfer passageway, and the synchronous transferring roller **18** is disposed further upstream of the first detecting member S. Furthermore, the second detecting member S_2 is provided along the sensitive transfer passageway and upstream of the sensitive paper exposing section **10** by the distance l_2 which is equal to the distance l_1. The distance L_1 between the original feeding end **4** and the center of the exposing section **2** may or may not be equal to the distance L_2 between the sensitive paper feeding end **8** and the exposing section **10**.

The operation of the above-described mechanism is substantially the same as that of the synchronizing mechanism shown in FIG. **1**. When the leading edge of the original which has first been fed reaches the first detecting member S_1, the synchronously transferring roller **18** stops its rotation. As a result, the transfer of the original is stopped, and the original remains there until the sensitive paper reaches the second detecting member S_2. When the leading edge of the sensitive paper which has been subsequently fed reaches the second detecting member S_2, the rotation of the transferring roller **18** is resumed, and the transfer of the original is resumed at the position of the first detecting member S_1. Since the distance l_1 between the first detecting member S_1 and the center of the original exposing section **2** is equal to the distance l_2 between the second detecting member S_2 and the center of the sensitive paper exposing section **10**, the original and the sensitive paper reach the respective exposing sections synchronously.

The synchronizing mechanism suitable for first feeding an original and then a sensitive paper as shown in FIG. **3** is especially suitable for use in a copying machine for copying a large-sized original. This is because when the size of the original is large, it is difficult to feed both the original and the sensitive paper synchronously into the respective transfer passageways. Of course, it is possible to provide a synchronizing mechanism which is suitable for feeding sensitive paper first and then an original. In this case, as shown in FIG. **2**, the first detecting member S_1 and the synchronously transferring roller **18** are provided in the sensitive paper transfer passageway, and the second detecting member S_2 is provided in the original transfer passageway. In order, however, to prevent the deterioration of sensitive paper by pre-exposure, a copying machine of the type adapted for feeding an original first is desirable.

As described above, according to the present invention, an original and sensitive paper are synchronized at positions which are upstream of the respective exposing sections by the same distance, whereby the original and the sensitive paper can reach the respective exposing sections synchronously irrespective of the difference in the length of the transfer passageways and of whether or they are fed synchronously into the respective transfer passageways.

FIG. **4** shows the arrangement of an original feeding inlet and a sensitive paper feeding inlet. They are arranged at the upper and lower positions with a partitioning plate **5** therebetween. The partitioning plate **5** is equipped with a guiding plate **5'** which extends downwardly from the end of said partitioning plate **5** to form the sensitive paper transfer passageway with the guiding bended plate **7** located opposite thereto. Thus, the original and sensitive paper can be easily fed in the registered state in their widthwide direction (left and right directions). In order to register the widthwise directions of the original and sensitive paper, it is desirable to provide a graduation showing the size or a support plate on the sensitive paper receiving plate **6**.

FIGS. **5** and **6** show the principal parts of a copying machine of the type wherein an original and sesitive paper are brought into intimate contact with each other and exposed by a common exposing section **19**.

In the embodiment shown in FIG. **5**, the transfer passageways are constructed such that the distance L_2 between the sensitive paper feeding end **8** and the center of the contact-exposing section **19** is shorter than the distance L_1 between the original feeding end **4** and the center of the contact-exposing section **19**. In this case, same as the synchronizing mechanism shown in FIG. **2**, the first detecting member S_1 is provided along the sensitive paper transfer passageway and upstream of the contact-exposing section **19** by the distance l_1, and further upstream of the first detecting member S_1, the synchronizing transferring roller **18** is provided. Furthermore, along the original transfer passageway, the second detecting member S_2 is provided upstream of the contact-exposing section **19** by the distance l_2 which is equal to the distance l_1. By virtue of such a construction, the original and the sensitive paper can reach the common contact-exposing section **19** quite synchronously in accordance with the same operation as in the synchronizing mechanism shown in FIG. **2**.

FIG. 6 shows a synchronizing mechanism suitable for feeding a sensitive paper first and then an original. In FIG. 6, the distance L_1 between the original feeding end 4 and the center of the contact-exposing section 19 is equal to the distance L_2 between the sensitive paper feeding end 8 and the contact-exposing section 19. However, these distances may not be equal to each other. In this case also, same as the synchronizing mechanism shown in FIG. 2 or 5, the first detecting member S_1 is provided along the sensitive paper transfer passageway and upstream of the contact-exposing section 19, and further upstream of the first detecting member S_1, the synchronously transferring roller 18 is provided. Furthermore, along the original transfer passageway, the second detecting member S_2 is provided upstream of the contact exposing section 19 by the distance l_2 which is equal to the distance l_1.

When in the above construction, sensitive paper is first fed into the sensitive paper transfer passageway, it advances over the sensitive paper transfer passageway. The leading edge of the sensitive paper pushes the first detecting member S_1 to stop the rotation of the transferring roller 18 temporarily. As a result, the leading edge of the sensive paper stops at the position of the first detecting member S_1. When an original is then fed into the original transfer passageway, and the original advances over the transfer passageway, the leading edge of the original pushes the second detecting member S_2, and by this action, the roller 18 is again rotated. Thus, both the sensitive paper and the original can reach the contact-exposing section 19 quite synchronously from the positions of the first and second detecting members S_1 and S_2 respectively.

Thus, according to the present invention even when contact exposing is carried out by providing the common contact-exposing section 19, the original and the sensitive paper can reach the respective exposing sections synchronously irrespective of the difference in the length of the transfer passageways and irrespective of whether the original and the sensitive paper are fed synchronously into the respective transfer passageways. This can be achieved by synchronizing the original and the sensitive paper at positions which are upstream of the common exposing section by the same distance.

FIG. 7 shows one example of an electrical circuit for controlling the synchronizing mechanism in accordance with the present invention. In FIG. 7, a terminal C of a microswitch S_1 which constitutes the first detecting member is connected to one end of an electric source 23. A normally closed contact NC and a normally open contact NO of the switch S_1 are connected respectively to a normally closed contact NC and a normally open contact NO of a switch S_2 which constitutes the second detecting member. An electromagnetic coil 18'' of a clutch 18' of the transferring roller 18 are connected to a terminal C of the switch S_2 and the other end of the electric source 23. An exciting coil 21 of a relay circuit 20 is also connected to a terminal C of the switch S_1 and the other end of the electric source 23. A normally open relay contact 22 of the relay circuit 20 is connected to a normally open contact NO of the switch S_1 and the electromagnetic coil 18''.

The electric circuit shown in FIG. 7 operates as shown below when applied to the copying machine shown in FIG. 1. Until an original reaches the switch S_1, electricity is supplied to the electromagnetic coil 18'' through the normally closed contact NC of the switch S_1 and the normally closed contact NC of the switch S_2, and the roller 18 is rotating. When the leading edge of the original reaches the switch S_1 and pushes it, the normally closed contact NC of the switch S_1 opens, and the normally open contact NO is closed. As soon as the normally closed contact NC of the switch S_1 opens, the exciting coil 21 is demagnetized, and the normally open relay contact 22 opens. Thus, even when the normally open contact NO of the switch S_1 is closed, the coil 21 remains demagnetized. As a result, electric current to the electromagentic coil 18'' is interrupted to stop the rotation of the transferring roller 18. When the leading edge of the sensitive paper reaches the switch S_2 and pushes it, the normally closed contact NC of the switch S_2 opens, and the normally open contact NO is closed. As a result, electricity is supplied to the electromagnetic coil 18'' through the normally open contact NO of the switch S_1 and the normally open contact NO of the switch S_2, and the transferring roller 18 is again rotated. At the same time, electricity is supplied to the coil 21, and the relay contact 22 is closed.

The relay circuit 20 serves to prevent the transferring roller from stopping until the original passes the roller 18. When the length of the sensitive paper is shorter than that of the original, it may happen that the rear edge of the sensitive paper passes the switch S_2 before the leading edge of the original passes the transferring roller 18. In such a case, the supply of electricity to the exciting relay 21 through the normally open contact NO of the switch S_1 and the relay contact 22 is continued even when the normally open contact NO of the switch S_2 opens. The relay contact 22 is self-retained in the closed state. For this purpose, electricity is continuously supplied to the electromagnetic coil 18'' through the normally open contact NO of the switch S_1 and the relay contact 22, and the synchronously transferring roller 18 continues to rotate.

When the rear edge of the original passes the switch S_1, the normally open contact NO of the switch S_1 opens and the normally closed contact NC is closed. Furthermore, when the rear edge of the sensitive paper passes the switch S_2, the normally open contact NO of the switch S_2 opens, and the normally closed contact NC is closed, thus bringing about the original condition.

While the present invention has been described with regard to an electrophotographic copying machine equipped with the synchronously exposing mechanism in accordance with this invention, the present invention is not limiting thereto, but it should be understood that the invention can be applied to copying machines of arbitrary types equipped with separate transfer passageways for an original and sensitive paper.

What we claim is:

1. A copying machine for transferring an image from an original to a sensitive paper comprising:

an original transfer passageway into which the original is manually inserted and which includes an original exposing section;

a sensitive paper transfer passageway into which the sensitive paper is manually inserted and which includes a sensitive paper exposing section;

means for transferring said original and said sensitive paper through respective passageways at the same speed;

a first detecting member located adjacent to one of said transfer passageways a predetermined distance upstream of the exposing section thereof;

a synchronously transferring roller located upstream of said detecting member;

means for stopping rotation of said roller temporarily;

a second detecting member located adjacent to the other transfer passageway and positioned upstream of the exposing section thereof by the same distance as the upstream distance of the first detecting member;

means for stopping the rotation of said synchronously transferring roller to suspend the transfer of the original or the sensitive paper temporarily in the respective passageway upon actuation of said first detecting member when the leading edge of the original or the sensitive paper has reached the first detecting member, and resuming its rotation and transferring again the original or the sensitive paper upon actuation of said second detecting member when the leading edge of the sensitive paper or the original has reached said second detecting member, and the distance between the feeding end of said one transfer passageway provided thereto with said synchronously transferring roller and the center of the exposing section thereof being shorter than the distance between the feeding end of said other transfer passageway and the center of the exposing section thereof.

2. The copying machine of claim **1** which includes a plurality of normally driven rollers located alongside said original transfer passageway for transferring an original, a transfer assisting device covering said original transfer passageway and being equipped with follow-up rollers, said assisting device being removable when a thick original is to be transferred, a charging device disposed between the sensitive paper feeding end the sensitive paper exposing section along the sensitive paper transfer passageway, a developing device disposed downstream of said sensitive paper exposing section, a plurality of normally driven rollers for transferring the sensistive paper along the sensitive paper taansfer passageway, and an optical system for projecting an image on the original exposing section onto the sensitive paper exposing section.

3. The copying machine of claim **1** wherein said original exposing section and said sensitive paper exposing section are one common contact-exposing section for exposing the original and the sensitive paper in intimate contact with each other.

4. The copying machine of claim **3** which includes a plurality of normally driven rollers located alongside said original transfer passageway for transferring the original, a charging device disposed between the sensitive paper feeding end and the contact-exposing section along said sensitive paper transfer passageway, a developing device disposed downstream of said contact-exposing section along said sensitive paper transfer passageway, a plurality of normally driven rollers for transferring the sensitive paper along said sensitive paper transfer passageway, and an optical system for projecting an image of the original onto the sensitive paper in intimate contact with the original within said contact-exposing section.

5. The copying machine of claim **1** wherein said synchronously transferring roller is equipped with an electromagnetic switch.

6. The copying machine of claim **1** wherein said first and second detecting members are constructed of microswitches.

7. The copying machine of claim **1** wherein said original feeding end and said sensitive paper feeding end are arranged at the upper and lower positions with a partitioning plate therebetween, whereby the original and the sensitive paper can be easily fed in the registered state in their widthwise directions.

8. A copying machine for transferring an image from an original to a sensitive paper comprising:

an original transfer passageway into which an original is manually inserted and which includes an original exposing section;

a sensitive paper transfer passageway into which the sensitive paper is manually inserted and which includes a sensitive paper exposing section;

means for transferring said original and said sensitive paper through respective passageways at the same speed;

a first detecting member located adjacent to said transfer pasageways a predetermined distance upstream of the exposing section thereof;

a synchronously transferring roller located upstream of said detecting member;

means for stopping rotation of said roller temporarily;

a second detecting member located adjacent to the other transfer passageway positioned upstream of the exposing section thereof by the same distance as the upstream distance of the first detecting member;

means for stopping the rotation of said synchronously transferring roller to suspend the transfer of the original or the sensitive paper temporarily in the respective passageway upon actuation of said first detecting member when the leading edge of the original or the sensitive paper has reached the first detecting member, and resuming its rotation to again transfer the original or the sensitive paper upon actuation of said second detecting member when the leading edge of the sensitive paper or the original has reached said second detecting member, and the original or the sensitive paper being first fed into said one transfer passageway and then the sensitive paper or the original respectively is fed into the other transfer passageway.

9. The copying machine of claim **8** which includes:

a plurality of normally driven rollers located adjacent said original transfer pasageway for transferring an original;

a transfer assisting device covering said original transfer passageway and being equipped with follow-up roller, said assisting device being removable when a thick original is to be transferred;

a charging device disposed between the sensitive paper feeding end and the sensitive paper exposing section adjacent the sensitive paper transfer passageway;

a developing device disposed downstream of said sensitive paper exposing section;

a plurality of normally driven rollers for transferring the sensitive paper adjacent the sensitive paper transfer passageway; and

an optical system for projecting an image on the original exposing section onto the sensitive paper exposing section.

10. The copying meachine of claim **8** wherein said original exposing section and said sensitive paper exposing section are one common contact-exposing section for exposing the original and the sensitive paper in intimate contact with each other.

11. The copying machine of claim **10** which includes:

a plurality of normally driven rollers located adjacent said original transfer passageway for transferring the original;

a charging device disposed between the sensitive paper feeding end and the contact-exposing section adjacent said sensitive paper transfer passageway;

a developing device disposed downstream of said contact-exposing section adjacent said sensitive paper transfer passageway;

a plurality of normally driven rollers for transforming

the sensitive paper adjacent said sensitive paper transfer passageway; and

an optical system for projecting an image of the original onto the sensitive paper in intimate contact with the original within said contact-exposing section.

12. The copying machine of claim **8** wherein said synchronously transferring roller is equipped with an electromagnetic clutch.

13. The copying machine of claim **8** wherein said first and second detecting members are constructed of microswitches.

14. The copying machine of claim **8** wherein said original feeding end and said sensitive paper feeding end are arranged at the upper and lower positions with a partitioning plate therebetween, whereby the original and the sensitive paper can be easily fed in the registered state in their widthwise directions.

* * * * *