Feb. 5, 1929. 1,701,041

E. L. JOHNSON ET AL

EXTENSION DEVICE

Filed Aug. 18, 1927

Fig. 1.

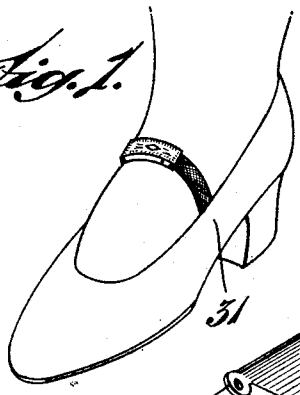

Fig. 2.

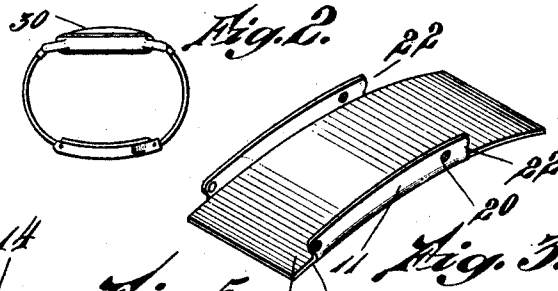

Fig. 3.

Fig. 5.

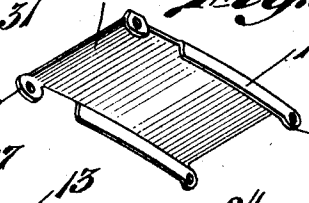

Fig. 6.

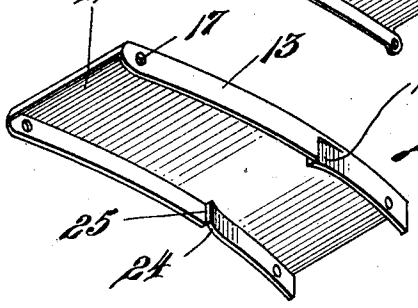

Fig. 4.

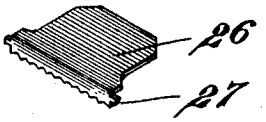

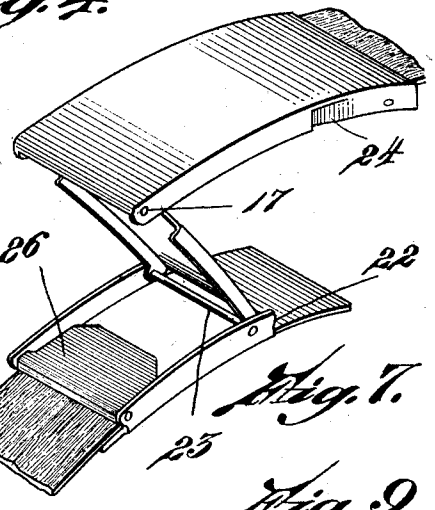

Fig. 7.

Fig. 8.

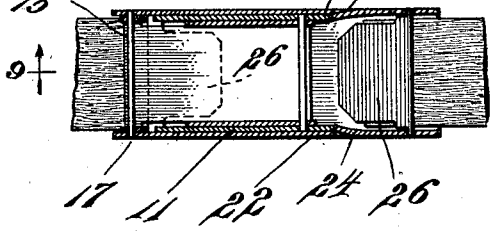

Fig. 9.

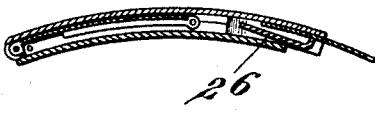

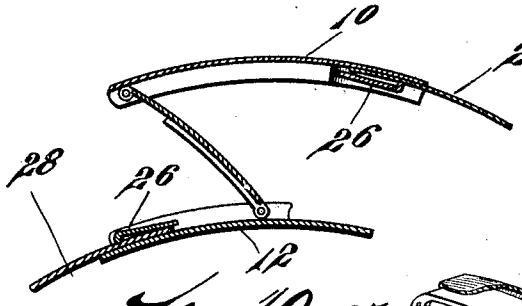

Fig. 10.

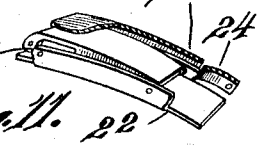

Fig. 11.

Inventors:
Emil L. Johnson.
Olof Lundsten.
BY Barlow & Barlow.
ATTORNEYS.

Patented Feb. 5, 1929. 1,701,041

UNITED STATES PATENT OFFICE.

EMIL L. JOHNSON AND OLOF LUNDSTEN, OF ATTLEBORO, MASSACHUSETTS.

EXTENSION DEVICE.

Application filed August 18, 1927. Serial No. 213,798.

This invention relates to an extension device for straps used on shoes, bracelets or the like, and the object of this invention is to provide a device to be interposed between the ends of the strap which may be unfolded to extend the effective length of the strap to permit the same to be passed over the hand or foot of the wearer as the case may be.

A further object of this invention is the provision of formations on the parts of the sections for securing the extension device in folded position.

A still further object of this invention is the provision of means for securing the strap to the device in such a manner that the device may be adjusted with respect to the strap ends to position the same in the center of the strap.

With these and other objects in view, the invention consists of certain novel features of construction, as will be more fully described, and particularly pointed out in the appended claims.

In the accompanying drawings:

Figure 1 is a perspective view of the extension device attached to a shoe strap which is shown as positioned on the foot of a wearer.

Figure 2 is a side elevation of the device illustrated in position on a wrist watch strap.

Figure 3 is a perspective view of one of the end sections of the device.

Figure 4 is a perspective view of the other end section of the device.

Figure 5 is a perspective view of the intermediate section which is hingedly secured between the two end sections.

Figure 6 is a perspective view of the gripping clamp for engaging the strap.

Figure 7 is a perspective view of the sections joined together and in partially open position.

Figure 8 is a sectional view with the outer plate of one of the sections removed.

Figure 9 is a sectional view taken on line 9—9 of Figure 8 with one of the gripping clamps removed to illustrate the securing action between the side flanges of the end sections.

Figure 10 is a sectional view of the sections in partially open position.

Figure 11 is a perspective view partially broken away to show the securing action between the flanges of the sections for holding the device in folded position.

It is found desirable in straps, such as shoe straps, wrist watch straps or the like, to provide an extension device intermediate the ends of the strap which may be unfolded to permit the strap and the shoe or watch to which it is attached, to be passed from the position where it is worn; and in order that such a device may be centered with relation to the strap, we have provided gripping clamps secured at each end of the device for adjustably attaching the device to the strap to secure this centralized position. Further it is found desirable to utilize the flanges of the sections for securing the sections in folded position which we have accomplished by formations on the different sections to cause an engagement between certain portions for holding the device in its folded position, and the following is a detailed description of the present embodiment of this invention illustrating one means by which these advantageous results may be accomplished.

With reference to the drawings 10 designates one of the end sections having side flanges 11, while 12 designates the other end section having side flanges 13. These end sections are pivoted to the ends of an intermediate section 14 by means of a pivot pin 15 extending through apertures in ears 16 of the section 14 and openings 17 in the end section 12, and by means of a pivot pin 23 passing through openings 18 in the flanges 19 of the section 14 and opening 20 in the flanges 11 of the end section 10.

The intermediate section 14 may be of any desired length to vary the amount of extension caused by the unfolding action of the three hingedly connected sections. These sections are held in folded position by means of formations at the ends 21 and 22 of section 10, the formation 21 snapping beneath a bulging portion 23^a on the ears 16 of the intermediate section which is held in close proximity to end section 12 by means of the pivot pin 15 while the opposite end 22 of the section 10 snaps beneath the inwardly offset portions 24 of the flanges 13 to engage with the ends 25 thereof and so interlock therewith as to prevent a separation of this end of the sections of the device. These inwardly offset portions 24 of the flanges 13 are extended inwardly substantially the distance of the thickness of the stock of the metal so as not to leave a visible opening on the edge of the device when observed from the sides to mar its appearance.

Each of the sections are formed on the arc of a circle and are sufficiently resilient to permit the sections to be straightened out slight-

ly for the snapping together of the flange formations just described and there is sufficient resiliency in the stock to permit these formations to be unclasped for an unfolding of the sections where desired.

The end sections are each attached to the strap by means of a gripping clamp 26 pivotally mounted by means of trunnions 27 between the side flanges of each of the end sections. By providing gripping clamps on each of the end sections when adjustment is desired to vary the size of the strap to fit the wrist or ankle of different wearers, the adjustment is made at each end of the device and thus the same maintains its central position with relation to the ends of the strap which is desirable in many instances. The section 12 by means of its gripping clamp 26 is secured to the strap part 28 while section 10 by means of its gripping clamp 26 is secured to the strap part 29. These strap parts may be then attached to the bails of a wrist watch 30 or may be secured to the margins of the upper of the shoe 31 as illustrated in Figure 1.

It will be observed that we have provided a device which may be unfolded to extend the effective length of a strap or folded to cause the strap to fit snugly about the foot or arm of the wearer with means which permit the strap to be adjusted for centering the same with respect to its ends and a means for securing the sections together which may be easily constructed by suitable formations of the parts to permit them to resiliently snap into engagement.

The foregoing description is directed solely towards the construction illustrated, but we desire it to be understood that we reserve the privilege of resorting to all the mechanical changes to which the device is susceptible, the invention being defined and limited only by the terms of the appended claims.

We claim:

1. In a flexible strap, an extension device comprising a pair of sections, gripping clamps, one on each of said sections each having a jaw movable relative to the sections for securing the strap in adjusted position between the section and the jaw, and an intermediate section pivotally secured at its opposite ends to said pair of sections and adapted to permit said sections to be unfolded and folded to vary the length of the strap.

2. In a flexible strap, an extension device comprising a pair of sections each having side flanges, means for securing the ends of the strap to said sections, an intermediate section hinged at its ends to said pair of sections adapting the device to be folded or unfolded to vary the length of the strap, the flanges of one of said pair of sections extending a length less than said section and co-operating formations intermediate the ends of and inwardly deflected from the said flanges of the other of said pair of sections for snapping over the end of the first of said flanges to hold said sections in folded position.

3. In a flexible strap, an extension device comprising a pair of sections each having side flanges, means for securing the ends of the strap to said sections, an intermediate section having ears at one end with undercut portions, means for pivoting said ears to one of said pair of sections, means for pivoting the other end of said intermediate section to the other of said pair of sections, said other of the pair of sections having the ends of its flanges formed to snap beneath said ears to hold the sections in folded position.

4. In a flexible strap, an extension device comprisng a pair of sections each having side flanges, means for securing the ends of the strap to said sections, an intermediate section hinged at its ends to said pair of sections adapting the device to be folded or unfolded to vary the length of the strap and formations between the flanges of said sections consisting of a portion of one of said flanges being deflected inwardly to engage the end of flanges of the other of said pair of sections to prevent unfolding of that end of the device.

5. In a flexible strap, an extension device comprising a pair of sections each having side flanges, gripping clamps, one pivotally mounted on the side flanges of each of said sections for adjustably securing the strap between it and the section on which it is pivoted and an intermediate section hingedly joining said pair of sections to permit a folding and unfolding of the sections to vary the length of the strap.

In testimony whereof we affix our signatures.

EMIL L. JOHNSON.
OLOF LUNDSTEN.