July 1, 1924. 1,499,811

J. R. ELDER

IMPLEMENT FOR FOLDING HOSE

Filed April 18, 1922

Fig. 1.

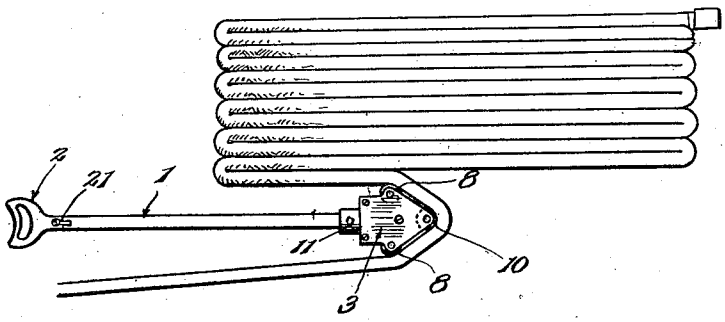

Fig. 2.

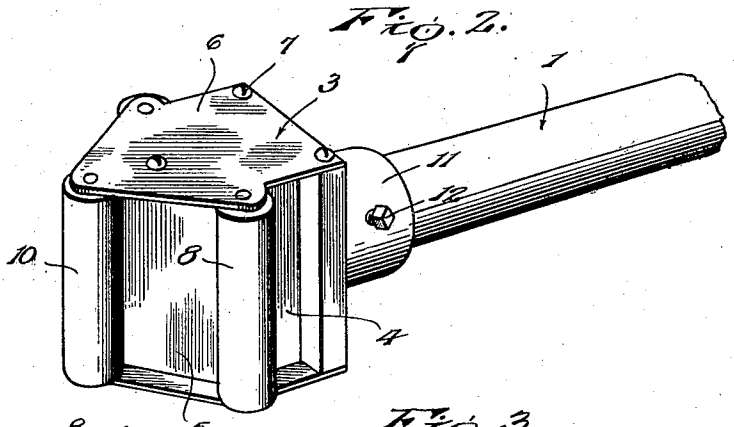

Fig. 3.

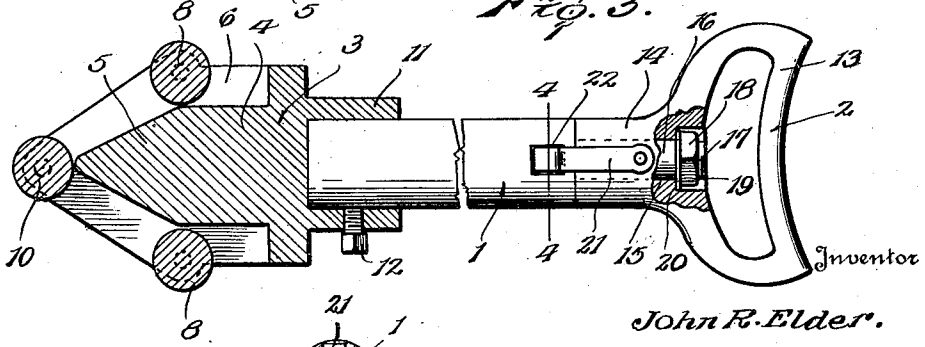

Fig. 4.

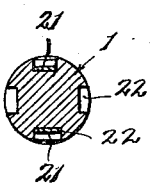

Inventor

John R. Elder.

By Lacey & Lacey, Attorneys

Patented July 1, 1924. 1,499,811

UNITED STATES PATENT OFFICE.

JOHN R. ELDER, OF FORT EDWARD, NEW YORK.

IMPLEMENT FOR FOLDING HOSE.

Application filed April 18, 1922. Serial No. 555,512.

To all whom it may concern:

Be it known that I, JOHN R. ELDER, a citizen of the United States, residing at Fort Edward, in the county of Washington and State of New York, have invented certain new and useful Improvements in Implements for Folding Hose, of which the following is a specification.

The present invention is an implement for use in folding hose, and has as its general object to provide means whereby fire hose and the like may be more conveniently and expeditiously folded than by the present method. Ordinarily it is customary, in folding fire hose to compact form within the storage space provided therefor, upon the hose cart or other piece of fire apparatus, for several firemen to work together in arranging the hose, after use, in the proper folded condition for storage. In performing this task they must exercise care to properly flatten the hose and compactly arrange the folds, and the operation ordinarily consumes considerable time and is more or less tedious. Therefore, the present invention has as its object to provide an implement adapted to be employed by one person and by the use of which such a hose may be quickly and conveniently arranged in suitable folds and, during the operation, properly flattened and compacted.

Another object of the invention is to provide an implement for the purpose stated which may be employed without likelihood of injury to the hose upon which it is caused to act and which will, on the other hand, smoothly flatten the folds made in the hose and thus prevent the formation of creases which would be liable to result in deterioration of the hose fabric.

Another object of the invention is to provide the implement with a handle capable of adjustment to assume various positions of angular adjustment to suit the convenience of the person using the implement.

In the accompanying drawing:

Figure 1 is a plan view of the implement embodying the invention, the view illustrating the manner of using the implement;

Fig. 2 is a perspective view of the head of the implement;

Fig. 3 is a detail horizontal sectional view through the implement, the intermediate portion being broken away;

Fig. 4 is a detail transverse sectional view on the line 4—4 of Fig. 3.

In storing away fire hose it has heretofore been the practice for three or more firemen to pass the hose back and forth between them to form the folds therein and thus reduce the hose to compact form for storage as shown substantially in Fig. 1 of the drawing. The implement embodying the invention is designed to avoid this tedious and laborious operation and provide means whereby the task may be performed in much less time and with greater facility.

The implement embodying the invention comprises a handle bar which is indicated by the numeral 1 and is provided at one end with a hand hold or grip 2 which will presently be specifically described, and at its other end with a head which is indicated by the numeral 3 and which is constructed to act upon the hose to be folded, when the implement is manipulated. The head 3 may be cast or otherwise formed from any suitable metal and it comprises a body portion 4 having a triangular or wedge-shaped nose 5 projecting from its forward side, all side surfaces of the nose being flat as is evident from Figs. 2 and 3. Bearing plates 6 are secured by screws or other suitable fastening means 7 to the upper and lower sides of the body 4 of the head 3 and project at their marginal portions beyond the side faces of the said body and nose, as best shown in Fig. 3 of the drawing. The numeral 8 indicates rolls which are journaled by suitable trunnions in bearing openings in projecting marginal portions of the plates 6 at opposite sides of the body 4 and substantially in a transverse line with the juncture of the nose 5 with the said body, the numeral 10 designating a suitable roll which is journaled in the marginal portions of the plates 6 which project beyond the point of the nose. Thus the rolls 8 and 10 are arranged in triangular form and the head as a whole is approximately wedge-shape. The head 3 is provided upon its rear side with a socket 11 into which is fitted the forward end of the handle bar 1, a set screw 12 being threaded through the wall of the socket to bear against the said end of the handle bar and secure the same within the socket. At this point it will be understood that in employing the implement, the stretch of the hose to which the coupling or nipple is connected, may first be arranged as shown in Fig. 1 of the drawing and an initial fold formed in the hose by the fire-

men using the implement and standing at one side of the fire apparatus upon which the hose is to be stored in folded condition. After this initial fold has been formed, the implement is applied at its head end against the hose and is shoved longitudinally of the said stretch of the hose carrying with it and flattening out another portion of the length of the hose to cause the same to lie flat against the initially arranged portion.

The folds which are formed in the hose at that side of the apparatus at which the fireman is standing may be produced manually and it will be evident that the folds at the opposite side will be effectively formed by the nose of the implement. The rollers 8 and 10 of course ride freely along the surface of the hose and serve to flatten the hose but without any liability of injuring the fabric. Also the arrangement of the rolls 8 and 10 in triangular form so shapes the nose of the implement as to adapt it to neatly and effectually produce the requisite folds in the hose. It will further be understood that not only does the implement afford means whereby the necessary fold may be formed in the hose, but it constitutes also a means for smoothly flattening the hose without the formation of wrinkles therein and in an even more effectual manner than where the task is performed by hand.

While I prefer to employ the rollers and the side bearing plates 6 to support the rollers, it is obvious that the said bearing plates and the rollers may be omitted and the head 4 with its triangular nose 5 directly engaged with the hose. The converging faces of the nose are obviously flat and are obviously of uniform width so that they furnish a smooth substantial support for the hose at the bight of the same and may be freely used without fear of mutilating the hose. Moreover, the head of the tool and the handle of the same are so related that the necessary propelling force may be applied to the tool with slight effort and without requiring the user to place his hand or wrist in an uncomfortable or fatiguing position.

The hand grip 2 is preferably of the form illustrated in the drawing, and comprises a bail 13 having a tubular shank 14 extending from its forward side, the bore of the shank being indicated by the numeral 15. The rear end of the handle bar 1 is reduced in diameter thus providing a portion 16 to which the shank 14 of the hand grip is rotatably fitted, the portion 16 being further provided with a threaded terminal 17 to which is fitted a nut 18 and a washer 19 which, by tightening of the nut 18, is caused to seat against a shoulder 20 formed by enlarging the rear end of the bore 15, the hand grip as a whole being in this manner connected with the handle bar 1 for rotative adjustment and being therefore adapted to assume either a horizontal or a perpendicular position with relation to the upright position of the head 3. In order that the hand grip may be held in its positions of adjustment, spring latch members 21 are secured upon the shank 14 and engage at their free ends in keeper recesses 22 formed at suitably located points in the circumference of the handle bar 1. Of course, the engagement of the free ends of the latch members 21 in the recesses 22 serves to retain the hand grip in either of the positions to which it may be adjusted, and the position of the grip may be changed without the necessity of loosening the nut 18.

In the foregoing description and in the appended claims, the terms "forwardly" and "rearwardly" refer to the position of the device when it is in use, shown in Figs. 1 and 2. The user of the tool stands at the left of Fig. 1 and pushes the tool away from himself or forwardly and the front end of the head is the end which fits in the bight of the hose.

Having thus described the invention, what is claimed as new is:

1. A hand implement for use in folding hose comprising a handle member, and a hose-engaging head carried by one end of the handle and having a triangular nose projecting from its forward side, said nose having flat sides converging toward the axis of the handle to form a bight-supporting edge at that end of the head more remote from the handle.

2. An implement for use in folding hose comprising a handle member, a hose engaging head carried thereby, and engaging rolls mounted upon the head and arranged substantially in triangular relation.

3. An implement for use in folding hose comprising a handle member, a hose engaging head carried thereby, an engaging roll at the forward side of the head, and an engaging roll off-set laterally with relation to and positioned rearwardly of the first-mentioned roll.

4. An implement for use in folding hose comprising a handle member, a head carried thereby and including a body portion provided with a forwardly projecting nose, the head having marginal portions at its upper and lower sides projecting beyond the faces of the said body and nose, and engaging rolls journaled between the projecting marginal portions.

In testimony whereof I affix my signature.

JOHN R. ELDER. [L. S.]