March 21, 1961 G. BURKHARDT 2,975,703

CONTINUOUS ARTICLE CODING APPARATUS

Filed May 18, 1959 4 Sheets-Sheet 1

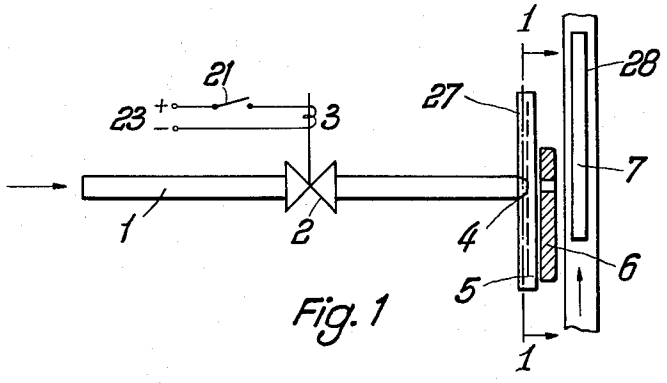

Fig. 1

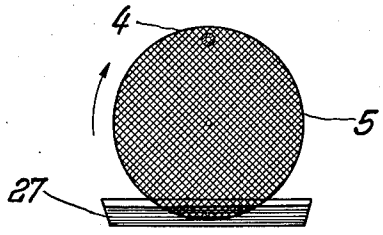

Fig. 1a

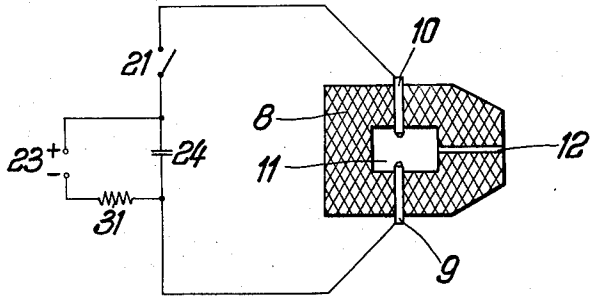

Fig. 2

Inventor:
Gisbert Burkhardt

By Eric D. Frankel
Patent Agent

March 21, 1961 G. BURKHARDT 2,975,703

CONTINUOUS ARTICLE CODING APPARATUS

Filed May 18, 1959 4 Sheets-Sheet 2

Fig. 3

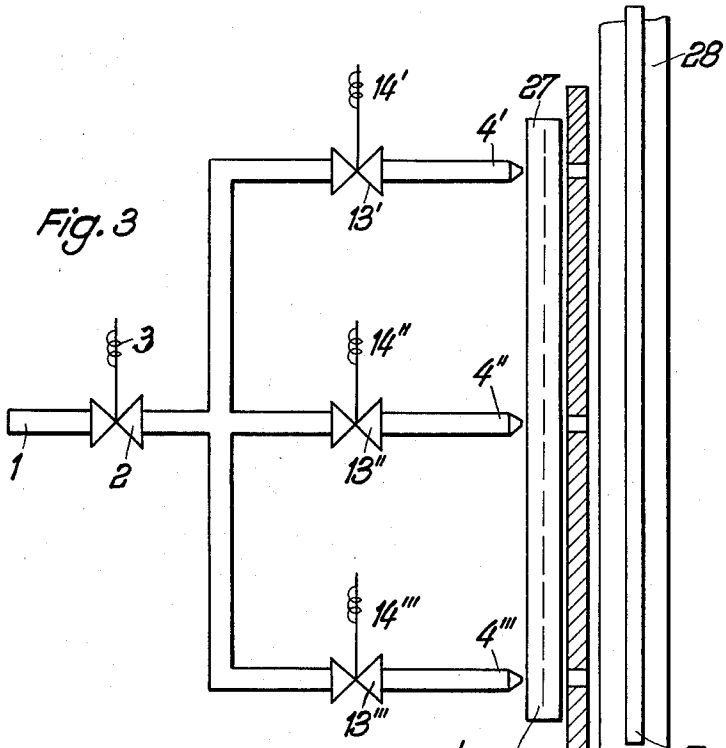

Fig. 8

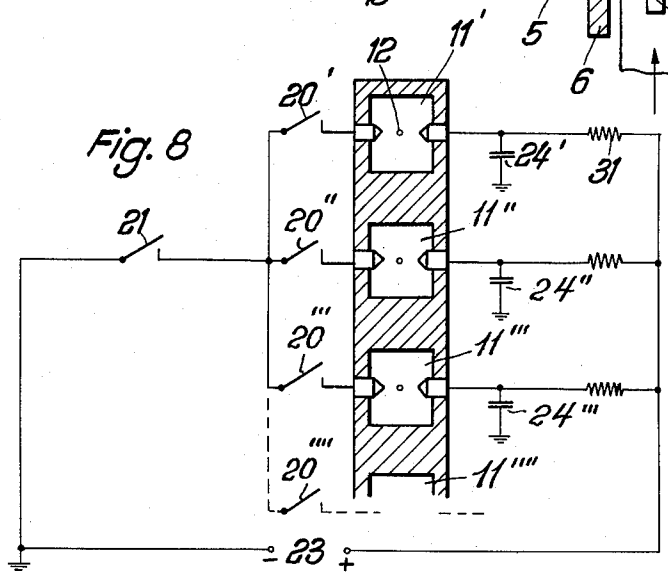

Inventor:
Gisbert Burkhardt
By Eric D. Munkel
Patent Agent

March 21, 1961 G. BURKHARDT 2,975,703

CONTINUOUS ARTICLE CODING APPARATUS

Filed May 18, 1959 4 Sheets-Sheet 3

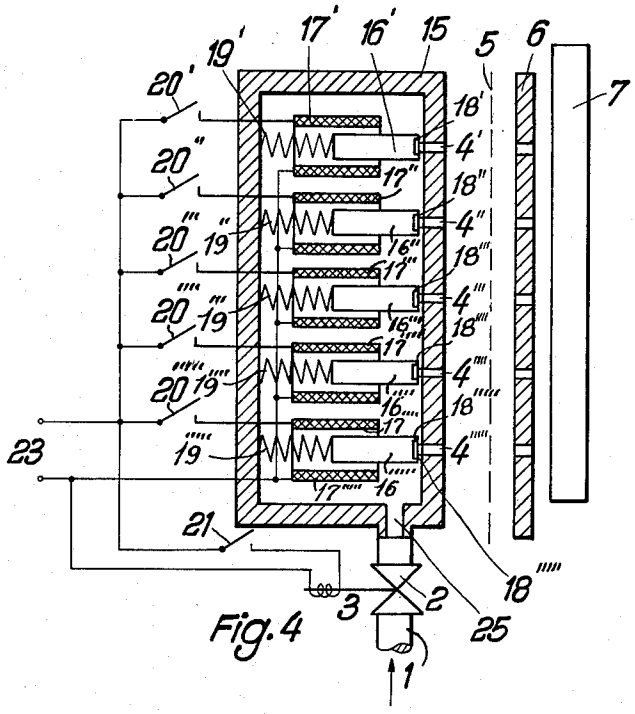

Fig. 4

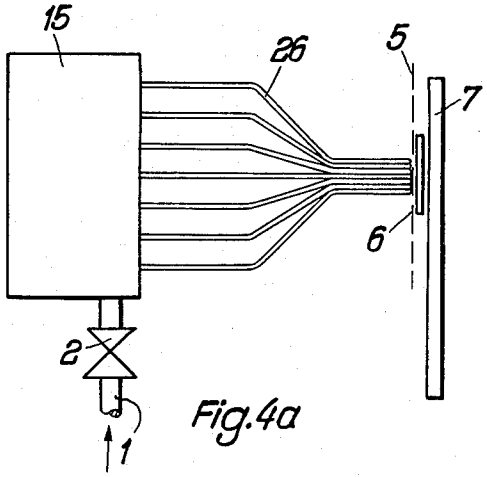

Fig. 4a

Inventor:
Gisbert Burkhardt
By Eric D. Frankel
Patent Agent

March 21, 1961 G. BURKHARDT 2,975,703

CONTINUOUS ARTICLE CODING APPARATUS

Filed May 18, 1959 4 Sheets-Sheet 4

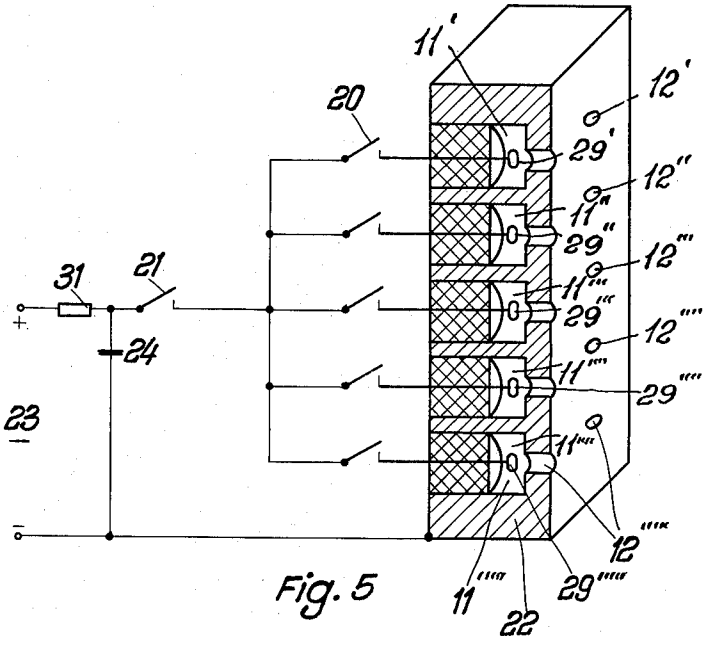

Fig. 5

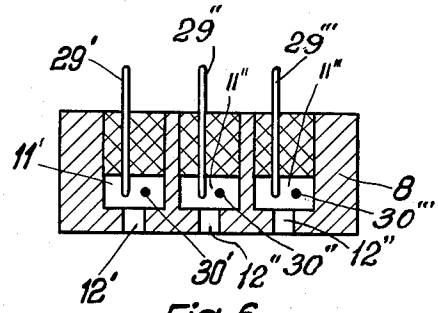

Fig. 6

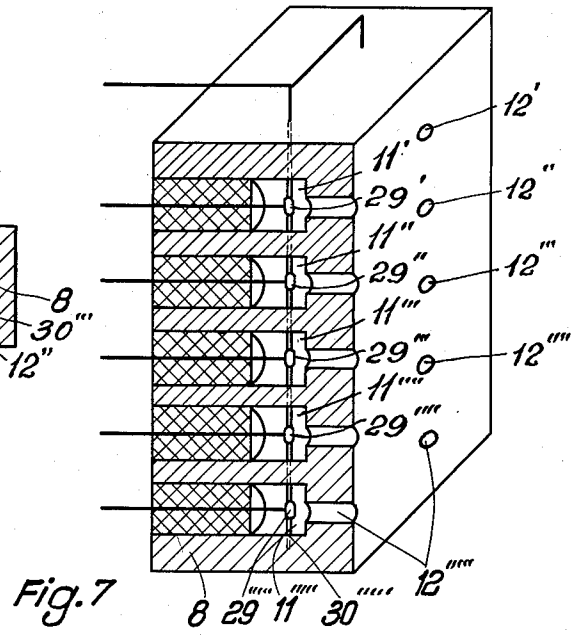

Fig. 7

Inventor:
Gisbert Burkhardt
By Emil D. Frankel
Patent Agent

United States Patent Office 2,975,703
Patented Mar. 21, 1961

2,975,703

CONTINUOUS ARTICLE CODING APPARATUS

Gisbert Burkhardt, Konstanz (Bodensee), Germany, assignor to Telefunken G.m.b.H., Berlin, Germany

Filed May 18, 1959, Ser. No. 813,996

Claims priority, application Germany May 28, 1958

18 Claims. (Cl. 101—114)

The present invention relates to an apparatus for applying signals to a signal carrier, particularly to the application of code signals to bulk goods being transported on a conveyor, for example, postal letters or packages. The application of such code signals to letters to designate their destination, or the application of a code number, is of great interest in connection with the automatic distribution of mail.

It is an object of the present invention to provide an apparatus adapted to apply code signals to postal letters while being continuously conveyed at full speed.

It is another object of this invention to provide this apparatus in such a manner that a great number of pieces of mail can be marked in a given unit of time.

Devices have been known which mechanically or electromechanically print code signals on letters. However, this printing step requires at least a brief stopping of the letter, so that a continuous conveying action is not possible. In addition to this, such devices cannot be constructed by employing conventional mechanical means if larger quantities than about 20,000 letters an hour have to be marked. Devices operating on the principle of a roll stamp cannot be used at the desired velocities, because mechanical parts have to be switched when the code signal is to be changed.

These disadvantages are overcome in the apparatus according to the invention. It is a further object of the invention to provide in the new apparatus at least one nozzle directed onto the path of the signal carrier, a stencil or mask in front of this nozzle, a dyestuff discharger or carrier between this nozzle and the stencil or mask and means to force a jet of air through the nozzle or through a number of nozzles corresponding to the desired signal combination and at the desired instant, whereby the air jet conveys the dyestuff to the letters at the correct position and in the desired distribution corresponding to the destination of the letters passing by the stencil or mask.

Still further objects and the entire scope of applicability of the present invention will become apparent from the detailed description given hereinafter; it should be understood, however, that the detailed description and specific examples, while indicating preferred embodiments of the invention, are given by way of illustration only, since various changes and modifications within the spirit and scope of the invention will become apparent to those skilled in the art from this detailed description.

In the drawings:

Figure 1 shows schematically a top view, partially in section, of an apparatus according to the invention;

Figure 1*a* is a section through the apparatus of Figure 1, along the line 1—1, and looking in the direction of the arrows;

Figure 2 illustrates schematically a section through a special device, i.e., spark chamber, for producing an air jet;

Figure 3 shows schematically a top view, partially in section, of an apparatus for simultaneous application of several code elements comprising a signal;

Figure 4 shows schematically a top view, partially in section, of another embodiment according to the present invention;

Figure 4*a* shows schematically a compact apparatus for producing coding signal elements which are very close to one another;

Figure 5 is a schematic perspective illustrattion of a section through an electrically conductive block having several devices for producing air jets, i.e., several spark chambers;

Figure 6 is a section through a similar block which, however, is electrically insulating;

Figure 7 shows a similar block in perspective and in cross section, illustrating a further embodiment of the invention;

Figure 8 shows schematically a modified electric circuit for energizing spark chambers as used in the embodiment according to Figure 7.

As shown in Figure 1, compressed air entering through a tube 1, is fed to a nozzle 4 after passing through a valve 2 suitably controlled via an electromagnet 3 by means of an electric circuit comprising a battery 23 and a switch 21. A dyestuff or ink carrier 5 is provided in front of the nozzle 4, said carrier being a ribbon or a disk which is continuously moving and to which new dyestuff is constantly applied.

According to Figure 1*a*, the carrier 5 is a screen disk which is constantly rotating and is immersed at its lower periphery in a container or tank 27 filled with dyestuff or ink. A fine-mesh screen has proven very suitable for this purpose. However, other kinds of carriers, for example, a thread or a bundle of threads or a nozzle on the end of a small tube positioned at right angles with respect to the nozzle 4 may be likewise used. Such arrangements of two nozzles positioned at right angles with respect to one another have been known, for example, as atomizers for perfume. The dyestuff removed by the air jet is passed through a mask 6 having an aperture forming a stencil and is then applied to an article 7 transported, for example, on a conveyor belt 28, such articles being, for example, postal letters. The kind of coding signal can be determined by a suitable configuration in the mask 6, for example, by a circle, a square, or by a dash-dot series. The shape of the aperture is suitably selected in such a manner, that the excess dyestuff drops off from the side away from the nozzle, so that smudging of the code signals on the letters being conveyed is prevented.

Figure 2 shows an embodiment by which a code signal element is applied with the aid of an air jet which is not obtained by compressed air externally supplied, and wherein no magnetically operated valve is needed. According to Figure 2, a spark gap is provided in a generally closed insulated casing 8, said spark gap being drawn between two electrodes 9 and 10, the points of which are within a chamber 11 communicating outside the casing only through a very narrow duct 12. When a powerful spark is discharged at the spark gap, for example, by discharging of a condenser 24 charged by means of a D.C. current source 23 upon closing of the switch 21 in the battery circuit including a resistor 31, such discharge causes a sudden powerful expansion of the small air volume in the chamber 11 with the result, that a jet of compressed air strong enough for dyestuff transmission is discharged through the duct 12. Any metal vaporized thereby will also be discharged together with the air jet.

It is possible to prevent oxidation of the spark gap electrodes by supplying a suitable inert atmosphere, for example, nitrogen, which is fed continuously and in measured quantities to the chamber 11.

If code signals are to be applied which comprise several signal elements, their application has to take place simultaneously, because, otherwise, at the latter conveying speed used, a relative displacement of the marks on the letter would take place if not all of these marks were applied exactly at the same time. An apparatus for carrying out such simultaneous application of several marks is schematically shown in Figure 3. This apparatus is substantially a multiplication of the apparatus illustrated in Figure 1. However, a separate nozzle 4', 4'', 4''' . . . is provided for each of the signal elements to be applied and the stencil mask 6 in front of each nozzle has an aperture corresponding to the shape of the particular signal element. Each of these nozzles 4', 4'', 4''' . . . is provided or controlled by an electromagnetic valve 13', 13'', 13''' . . ., the coils 14', 14'', 14''' . . . of which are independently energized by power delivered via contacts which may be operated at a keyboard (not shown). However, the compressed air is released by means of the electromagnetic valve 2 which is common to all of the valves 13', 13'', 13''' . . . said valve 2 being controlled by the coil 3. In order to apply predetermined code signals, first either one or several of the coils 14', 14'', 14''' . . . are energized by closing the respective circuits by means of a keyboard, so as to open one or several of the electromagnetic valves 13', 13'', 13''' . . ., whereupon the path to all of the compressed air valves is simultaneously opened, by causing opening of the single electromagnetic valve 2. The circuit of the coil 3 for releasing the electromagnetic valve 2 is suitably completed by means of the letters 7 being transported, for example, by an edge of such letters. For this purpose, a photoelectric device or feeler contact may be used in a manner known per se. Such device is not shown in the schematic drawings.

Figure 4 shows an arrangement with a plurality of nozzles requiring very little space. The front wall of a generally enclosed casing 15 is provided with front apertures forming nozzles 4', 4'', 4''' . . . Another, for example, the lower, wall of casing 15 has an opening 25 for supplying compressed air by means of a pipe 1. A small electromagnetic coil 17', 17'', 17''' . . . is associated with each of the nozzles 4', 4'', 4''' . . . respectively, the armature 16', 16'', 16''' . . ., pressing seals 18', 18'', 18''' . . ., provided at the fronts of the armatures 16', 16'', 16''' of the nozzles 4', 4'', 4''' . . . with the aid of a spring 19', 19'', 19''' . . . on the openings and, thereby, closing said nozzles. If some of these coils 17', 17'', 17''' . . . are energized via their switches 20', 20'', 20''' . . ., the respective armatures 16', 16'', 16'' . . . are attracted and the respective nozzles 4', 4'', 4''' . . . are opened. Now, upon opening of the main valve 2, operated by the electromagnet coil 3, the circuit of which can be closed via a switch 21, compressed air is supplied to the casing 15, and those of the nozzles 4', 4'', 4''' . . . which are open will discharge an air jet. Since the opening of these nozzles 4', 4'', 4''' . . . takes place prior to the application of the air pressure, rather small electromagnetic coils 17', 17'', 17''' . . . are sufficient.

Likewise, the springs 19', 19'', 19''' . . . can be very weak, because they have to press the armature only very lightly against the nozzle openings. The pressure of the compressed air forces the armatures which are only lightly pressed by the springs against the nozzles, and assists the force of the springs.

In order to arrange the discharge openings of the nozzles 4', 4'', 4''' . . . closer to one another, it is possible to add tubes 26, as shown in Figure 4*a*, and to bend them so that the actual discharge openings are restricted to a small space corresponding to the size of the zone provided for the application of the code signals on the articles to be marked.

Figures 5, 6 and 7 show systems with several spark chambers 11', 11'', 11''' . . . with ducts 12', 12'', 12''' . . ., corresponding to the structure of Figure 2, said spark chambers in each case being combined in a single block 22. According to Figure 5, this block 22 is made of electrically conductive material and is connected to one terminal of the voltage source 23. Electrodes 29', 29'', 29''' . . . are insulated from one another and the block 22, and have plate-shaped or bulbous front ends. The discharge of these electrodes 29', 29'', 29''' . . . is directed to the inner walls of the chambers. The life of electrodes of such shape is longer than that of pin-shaped electrodes, because the discharge path can move when the electrodes are partially burnt.

Figures 6 and 7 illustrate a block 8 of electrically insulating material, for example, of ceramic. In this case, the pressure yield is larger because the ceramic material is an inferior conductor of heat and the insulating wall does not cool the gases as quickly as the metal wall of Figure 5. One of the electrodes 29', 29'', 29''' . . . is introduced into the chambers from the rear, similarly as in Figure 5. The other electrodes 30', 30'', 30''' . . . in these chambers are formed by pins passing through other walls of the casing 8.

Figure 8 shows a circuit providing for the discharge gap in each discharge chamber 11', 11'', 11''' . . . a separate condenser 24', 24'', 24''' . . . which is connected to a current source 23 via a series resistance 31 in a manner known per se. In this case, and also in the embodiment of Figure 5, switches 20', 20'', 20''' . . . and/or the main switch 21 may be replaced by electronic switching valves, such as thyratrons.

It is to be understood that the apparatus according to the invention may also be used for applying marking substances of different kinds, for example, magnetizable materials, rather than dyestuffs, coloring matter, or ink.

I claim:

1. Apparatus for applying code signals to articles being conveyed, said apparatus comprising: at least one nozzle means directed toward the path along which the articles are being conveyed; stationary stencil means arranged between said nozzle means and said path; a dyestuff reservoir; a dyestuff carrier capable of holding dyestuff by adhesion and of releasing the dyestuff under the influence of an air jet, said carrier being movable between said reservoir of dyestuff and a position wherein the dyestuff picked up from said reservoir and adhering to said carrier is interposed between said nozzle means and said stencil means; and means for forcing an air jet through said nozzle means at predetermined instants and thereby causing dyestuff adhering to said carrier to be released and moved through said stencil means onto articles being conveyed, whereby there is applied to the articles being conveyed a code signal permutation corresponding to said predetermined instants and having a geometric configuration corresponding to said stencil means.

2. Apparatus according to claim 1, wherein said dyestuff carrier lies partly between said nozzle means and said stencil means; a source of dyestuff adjacent another part of the carrier; and means to rotate the carrier, whereby it absorbs the dyestuff at said source and delivers it to the air jet adjacent said nozzle means.

3. Apparatus according to claim 2, wherein said dyestuff carrier comprises a screen-like disk.

4. Apparatus according to claim 2, wherein said dyestuff carrier comprises a plurality of threads.

5. Apparatus according to claim 1, wherein said dyestuff carrier comprises a screen-like web for absorbing the dyestuff.

6. Apparatus according to claim 1, wherein said nozzle means is connected with a source of air pressure; and a nozzle means selection valve interposed between the source and said nozzle means.

7. Apparatus according to claim 1, wherein said nozzle means comprises a substantially closed chamber having an air jet duct extending therefrom and aimed at said dyestuff carrier; electrode means in the chamber; and

power means for initiating an electric discharge of sufficient power to cause a jet to issue from the duct.

8. Apparatus according to claim 7, wherein the chamber comprises an insulated casing having low thermal conductivity, and wherein the chamber has two electrodes between which the discharge takes place.

9. Apparatus according to claim 7, wherein said power means comprises a capacitor for storing and supplying the discharge current and a resistance path through which the capacitor is charged.

10. Apparatus according to claim 7, wherein an atmosphere of inert gas is maintained in said chamber.

11. Apparatus according to claim 7, wherein said chamber comprises a casing of electrically conductive material and contains an electrode passed therethrough in insulated relationship, whereby the discharge occurs between said electrode and said casing.

12. Apparatus according to claim 11, wherein said electrode has a bulbous end.

13. Apparatus for applying code signals to articles being conveyed, said apparatus comprising: a plurality of nozzle means directed toward the path along which the articles are being conveyed; stationary stencil means arranged between said nozzle means and said path; a dyestuff reservoir; a dyestuff carrier capable of holding dyestuff by adhesion and of releasing the dyestuff under the influence of an air jet, said carrier being movable between said reservoir of dyestuff and a position wherein the dyestuff picked up from said reservoir and adhering to said carrier is interposed between said nozzle means and said stencil means; and means for forcing air jets through said nozzle means at predetermnied instants and thereby causing dyestuff adhering to said carrier to be released and moved through said stencil means onto articles being conveyed, whereby there is applied to the articles being conveyed a code signal permutation corresponding to said predetermined instants and having a geometric configuration corresponding to said stencil means.

14. Apparatus according to claim 13, wherein said source is connected by a common feed duct to a distribution duct connected to each nozzle means and wherein said selection valves are located in the distribution ducts; and a master control valve in said common feed

duct, whereby the selection valves preselect those nozzle means which are to be actuated, and then the air jet is initiated by said master control valve.

15. Apparatus according to claim 14, wherein said selection valves assigned to the individual nozzle means and the master valve provided in the common feed pipe are electromagnetically actuated.

16. Apparatus according to claim 13, wherein each nozzle means comprises a substantially closed chamber having an air jet duct extending therefrom and aimed at said dyestuff carrier; a plurality of electrode means, each arranged in a respective chamber; power means for initiating an electric discharge of sufficient power to cause a jet to issue from the duct of each nozzle means; a plurality of selector switches, each interposed between said power source and a respective electrode; and a master switch interposed between said power source and said selector switches, whereby said selector switches serve to preselect the particular electrodes to which power is to be applied and said master switch initiates the simultaneous energization of the preselected electrodes.

17. Apparatus according to claim 16, wherein said power means comprises a single capacitor common to all of said electrodes for storing and supplying the discharge current, and a resistance path through which said capacitor is charged.

18. Apparatus according to claim 16, wherein said power means comprises a plurality of capacitors, each connected to a respective electrode, and a plurality of resistance paths, each connected to a respective capacitor for allowing the same to be charged.

References Cited in the file of this patent

UNITED STATES PATENTS

172,340	Perkins	Jan. 8, 1876
767,684	Burdick	Aug. 16, 1904
1,277,119	Quigley	Aug. 27, 1918
1,326,483	Doran	Dec. 30, 1919
1,508,669	Rabezzana	Sept. 16, 1924
1,581,322	Reed	Apr. 20, 1926
2,335,461	Smith	Nov. 30, 1943
2,737,882	Early et al.	Mar. 13, 1956