H. B. McCABE.

RIBBON REVERSING MECHANISM FOR TIME RECORDING REGISTERS.

APPLICATION FILED OCT. 1, 1920.

1,397,895.

Patented Nov. 22, 1921.

3 SHEETS—SHEET 1.

Fig. 1.

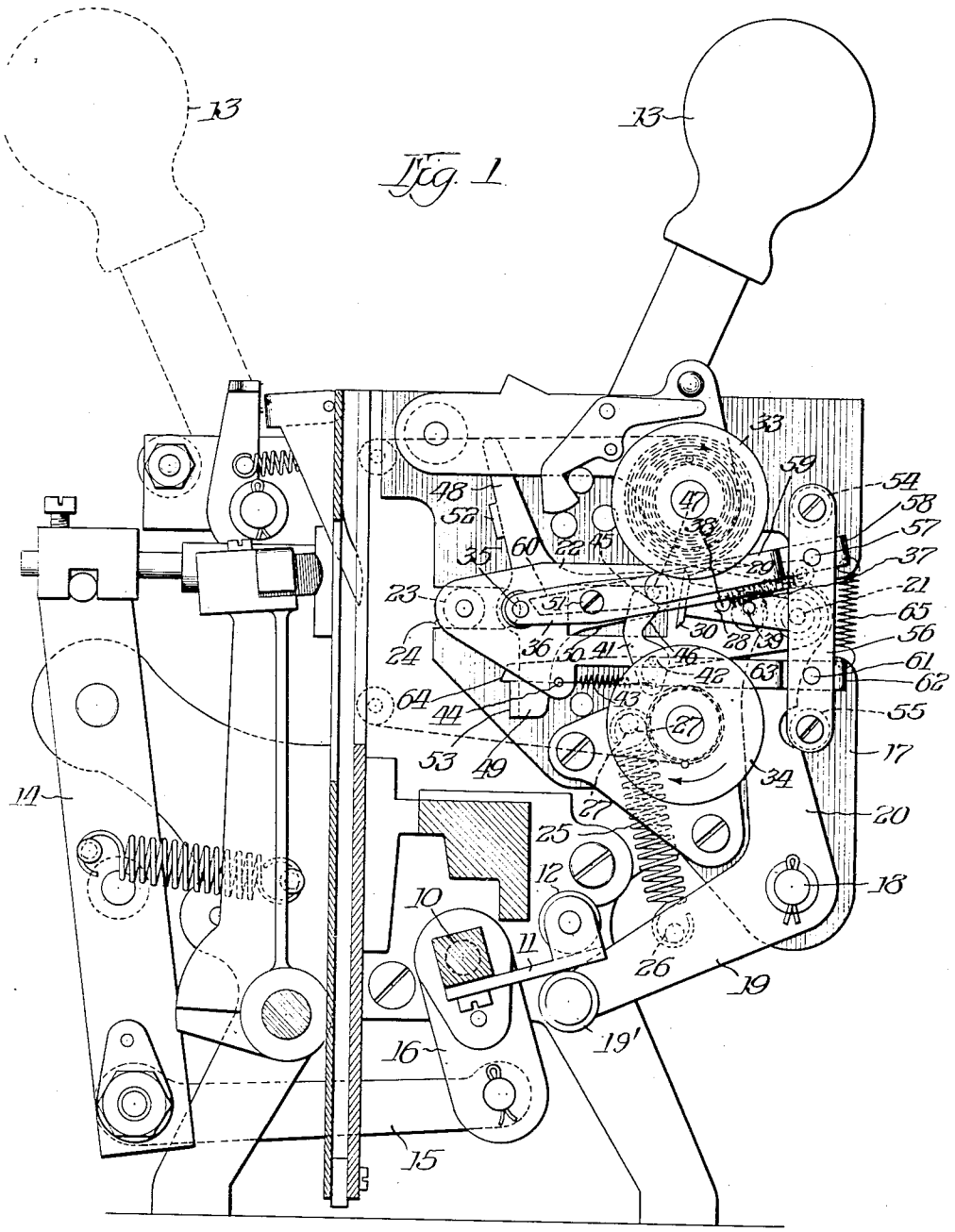


Witnesses:

H. C. Dickson

Inventor:

Horace B. McCabe,

By Pond & Wilson,

Attys.

H. B. McCABE.

RIBBON REVERSING MECHANISM FOR TIME RECORDING REGISTERS.

APPLICATION FILED OCT. 1, 1920.

1,397,895.

Patented Nov. 22, 1921.

3 SHEETS—SHEET 2.

Fig. 2.

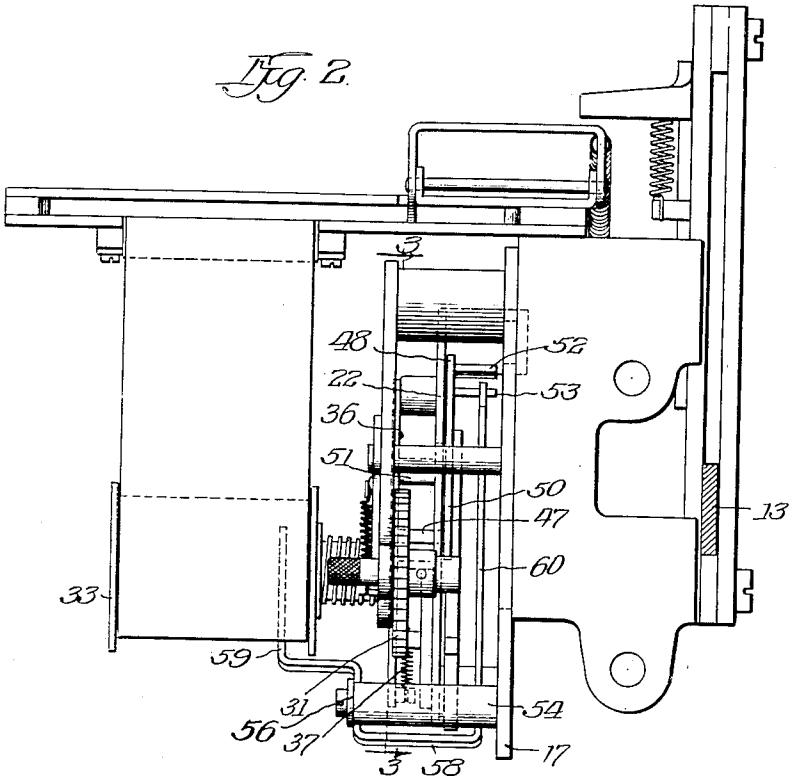


Fig. 3.

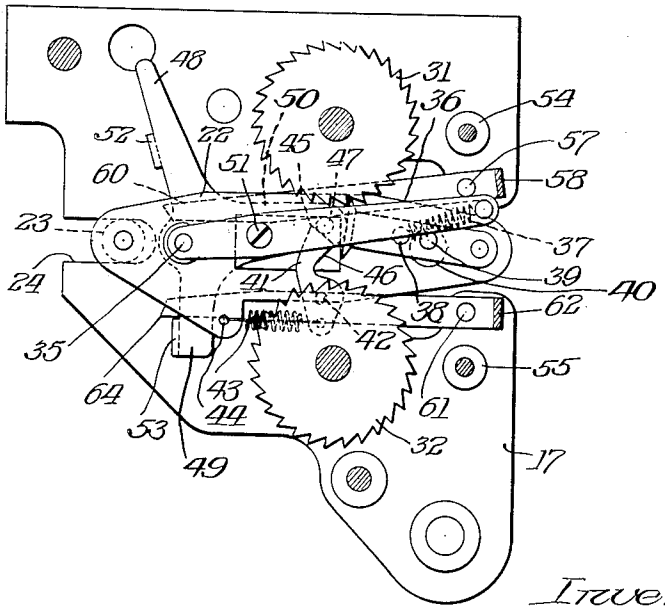


Witness:
Geo. C. Davison

Inventor
Horace B. McCabe,
By Pond & Wilson,
Atty's.

H. B. McCABE.

RIBBON REVERSING MECHANISM FOR TIME RECORDING REGISTERS.

APPLICATION FILED OCT. 1, 1920.

**1,397,895.**

**Patented Nov. 22, 1921.**

3 SHEETS—SHEET 3.

Fig. 4

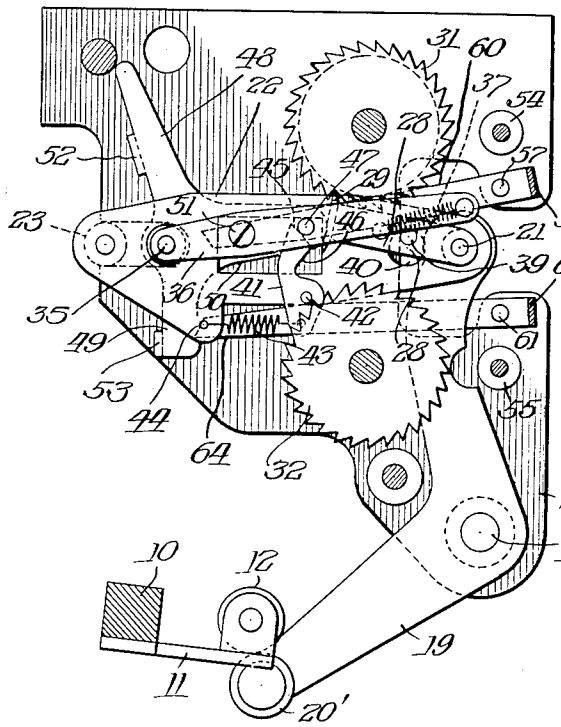


Fig. 6.

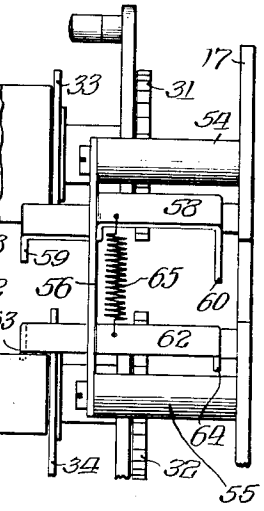


Fig. 5

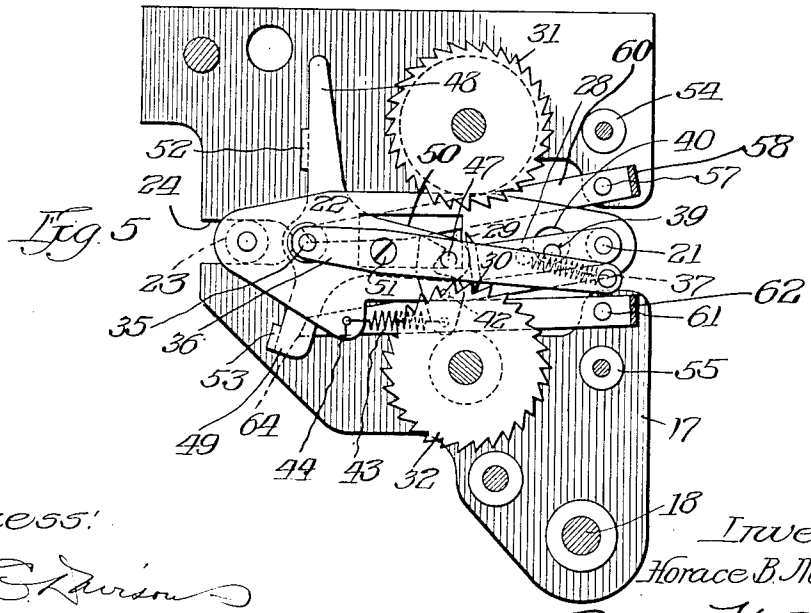


Witness:

F. C. Lawson

Inventor:

Horace B. McCabe

By Pond & Wilson

Attys

# UNITED STATES PATENT OFFICE.

HORACE B. McCABE, OF MADISON, WISCONSIN, ASSIGNOR TO GISHOLT MACHINE COMPANY, OF MADISON, WISCONSIN, A CORPORATION OF WISCONSIN.

## RIBBON-REVERSING MECHANISM FOR TIME-RECORDING REGISTERS.

1,397,895. Specification of Letters Patent. Patented Nov. 22, 1921.

Application filed October 1, 1920. Serial No. 414,073.

*To all whom it may concern:*

Be it known that I, HORACE B. McCABE, a citizen of the United States, residing at Madison, in the county of Dane and State of Wisconsin, have invented certain new and useful Improvements in Ribbon-Reversing Mechanisms for Time-Recording Registers, of which the following is a specification.

This invention relates to ribbon reversing devices for the printing mechanisms of time recording registers, and has been designed more especially, but not exclusively, for use on time recording registers of the general type and character disclosed in my prior Patents No. 966,858, January 18, 1910; No. 1,063,272, June 3, 1913; No. 1,104,125, July 21, 1914; No. 1,117,213, November 17, 1914; No. 1,129,996, March 2, 1915; and No. 1,215,683, February 13, 1917.

The purpose or object of the invention is to provide in a register of the character above indicated a simple, reliable and automatic mechanism for reversing the travel of the printing ribbon between the two spools on which the ribbon is carried, so that, as soon as the ribbon is nearly unwound from the delivery spool and wound up on the receiving spool, the spool actuating pawl is automatically shifted from the receiving to the delivery spool, thus reversing the characters of the two spools.

In accordance with the present invention, the spool actuating pawl is itself driven by the handle of the machine at each swing of the latter, and the pawl shifting means is in the preferred form of the invention, operated by a pair of pivoted members which lie under light spring pressure, against the surface of the ribbon on the spools, said members alternately being thereby brought into a position, as the delivery spool becomes unwound, to actuate the pawl shifting mechanism.

My invention its mode or principle of action and the advantages inherent therein will be readily understood and appreciated by those skilled in the art from the following detailed description, taken in connection with the accompanying drawings in which I have illustrated a practical embodiment of the invention in association with such parts of the time recording register as are necessary to afford a clear understanding of the improvement itself, and referring to said drawings:

Figure 1 is a vertical front to rear section of the register taken through the printing mechanism, but with the printing wheels omitted for the sake of clearness and showing my improved ribbon reversing mechanism applied thereto;

Fig. 2 is a fragmentary top plan view, showing the ribbon reversing mechanism and parts immediately associated therewith;

Fig. 3 is a sectional view taken on the line 3—3 of Fig. 2, looking in the direction of the arrows, and showing the spool actuating pawl engaged with the ratchet of the upper spool and at the beginning of its working stroke;

Fig. 4 is a view similar to Fig. 3, but showing the actuating pawl at the end of its working stroke;

Fig. 5 is a view similar to Figs. 3 and 4, but showing the actuating pawl engaged with the ratchet of the lower spool and substantially midway of its working stroke; and

Fig. 6 is a detail front elevation, more particularly showing the mounting of the pivoted arms which rest upon the spools and control the position of the spool driving pawl.

For a general description of the recording register itself, reference may be had to my former patents above identified, and more especially Patents No. 1,063,272 and No. 1,215,683.

In order to provide a simple handle actuated means for actuating the ribbon reversing mechanism, I have added to the machine of the said patents a rock shaft 10 journaled in and between the side frame plates of the machine, said shaft having secured thereto an arm 11 carrying a roller 12. The shaft 10 is actuated from the swinging handle 13 of the machine by means of a pivoted cam-plate, such as the cam plate 125 shown in

Fig. 1 of my Patent No. 1,215,683 to which cam-plate the handle 13 is rigidly secured, a link, such as the link 124, shown in Fig. 1 of the last-named patent, a lever 14, which corresponds to the lever 121 shown in Fig. 1 of the last-named patent, a link 15 pivoted to the lower end of the lever 14, and an arm 16 on the shaft 10 to which the other end of the link 15 is pivoted.

17 designates a vertical frame-plate of the machine, to which is pivoted at 18 an elbow-lever, the lower arm 19 of which carries a roller 19′ lying directly beneath and adapted to be depressed by the roller 12 each time the shaft 10 is rocked by swinging the handle 13 from either the full line to the dotted line position, or the dotted line position to the full line position. The upstanding arm 20 of this elbow-lever is jointed by a pivot pin 21 to one end of a plate 22, the opposite end of which plate carries a roller 23 that rides in a horizontal slot 24 formed in the inner vertical edge of the frame-plate 17.

It will thus be seen that each time the shaft 10 is rocked, the plate 22 will be moved inwardly to an extent substantially equal to the length of the slot 24, and the said plate is returned to its outer position by the pull of a tension spring 25, said spring being anchored at its lower end to a stud 26 on the lower arm 19 of the elbow-lever and at its upper end to a stud 27 on the frame-plate 17. Fast on the pivot pin 21 is the arm 28 of the spool actuating pawl, said arm being formed at its free end with upper and lower teeth 29 and 30, respectively for driving engagement with the ratchets 31 and 32 of the upper and lower printing ribbon spools 33 and 34, respectively.

35 designates a short rock shaft that is journaled in the plate 22 slightly forwardly of the inner end of the latter, and fast on one end of this rock shaft is a forwardly extending arm 36. To the free end of the arm 36 is anchored one end of a pull spring 37, the other end of said spring being anchored to a stud 38 on the pawl arm 28. With the arm 36 in the raised position shown in Figs. 1, 3 and 4, it is evident that the tension of the spring 37 holds the pawl up with its upper tooth 29 engaged with the ratchet 31 of the top spool 33. When, however, the shaft 35 is rocked, by the means hereinafter described, to swing the arm 36 to its lower position shown in Fig. 5, the spring 37 is carried across the pivot axis 21 of the pawl, and the tension of the spring acts instantly to snap the pawl downwardly into engagement with the ratchet 32 of the lower spool 34. When, however, the arm 36 is again swung upwardly the pawl is returned to its raised position in which it engages with the driving ratchet of the upper spool. The swinging movements of the pawl are preferably limited by a stop-pin 39 (Figs. 4 and 5) on the opposite side of the pawl engaged with a hole 40 in the plate 22. The arm 36 is releasably locked in both its up and down position, so as to prevent accidental reversal of the pawl by means of a detent pawl 41 that is pivoted at 42 to the plate 22 and is urged toward the actuating pawl 28 by a pull spring 43 connected to its lower end and anchored at 44 to the plate 22. The detent pawl 41 is formed with a pair of opposite cam inclines 45 and 46, engaged by a pin or stud 47 on the arm 36. In the raised position of the arm, it is upheld by the engagement of the stud 47 with the upper cam 45, as shown in Figs. 1, 3 and 4. When the arm 36 is in its lower position, it is held therein by the engagement of the stud 47 with the lower cam incline 46.

Fast on the rock shaft 35, on the opposite side of the slide-plate 22 from the arm 36, is a three-arm member comprising upwardly and downwardly extending arms 48 and 49, respectively, and a substantially horizontal arm 50 that lies parallel with the arm 36, and is preferably rigidly connected to the latter by the pin 47 and intermediate spacing pin 51 (Fig. 2). On the arm 48 is a lateral lug 52, and on the arm 49 is a similar lateral lug 53. The arms 36, 48 and 49, all fast on the rock shaft 35, constitute in effect a pawl shifting lever fulcrumed at 35 on the slide-plate 22, and actuated by means controlled by the rolls of ribbon on the two spools, which controlling means will next be described.

Referring to Fig. 6, on the frame-plate 17, slightly in front of the spools are a pair of lateral studs 54 and 55, connected at their outer ends by a bar 56. Pivotally mounted at 57 between the frame-plate 17 and the bar 56 is a yoke-shaped member 58, one laterally offset arm 59 of which lies beneath and in contact with the roll of ribbon on the upper spool 33, while its other arm 60 extends inwardly with its free end in a position to be struck by the lug 52 of the lever-arm 48 on the outward travel of the slide 22, when said free end has been raised sufficiently to lie in the path of travel of the lug 52.

Pivotally mounted at 61 between the frame-plate 17 and the bar 56 is a similar yoke-shaped member 62, one laterally offset arm 63 of which overlies the ribbon roll on the lower spool 34, while its other arm 64 extends inwardly with its free ends lying in a position to be struck by the lug 53 on the lever arm 49 when said arm 64 has been lowered until its free end lies in the path of travel of the lug 53. The two yoke members 58 and 62 are connected by a pull spring 65 which causes the upper yoke to swing upwardly as the ribbon roll on the upper spool decreases in diameter and the lower yoke to

swing downwardly as the ribbon roll on the lower spool decreases in diameter.

The operation of the mechanism will be readily understood from the foregoing description, in connection with the several working positions thereof illustrated in Figs. 1, 3, 4 and 5. In Fig. 1 the upper spool is shown as nearly full and the lower spool as almost empty of ribbon. The free end of the yoke-arm 60 is well below the path of travel of the lug 52, while the free end of the yoke-arm 64 has dropped almost into the path of travel of the lug 53. As soon as a few more coils of the ribbon are unwound from the lower spool the free end of the yoke-arm 64 drops into the path of the lug 53, as shown in Fig. 4; and on the next outward movement of the slide-plate 22 the lug 53 strikes the end of said yoke-arm, thereby rocking the lever to the position shown in Fig. 5, whereby the pawl 28 is shifted out of engagement with the ratchet of the upper spool and into engagement with the ratchet of the lower spool. This condition exists until, by the reduction in diameter of the ribbon roll on the upper spool, the free end of the yoke-arm 60 has moved into the path of travel of the lug 52, when it will be struck by the latter, thereby rocking the lever back to the position illustrated in Figs. 1, 3 and 4, and returning the pawl 28 into engagement with the ratchet of the upper spool. In this way, as fast as the unwinding spool becomes nearly empty, the actuating pawl is shifted to the ratchet of the nearly empty spool and the latter at once becomes the winding or receiving spool.

While I have shown and described one specific automatic mechanism for effecting the stated purpose of the invention it is manifest that this mechanism may be varied in detail to a considerable extent without departing from the operative principle of the device or impairing its effectiveness. Hence, I reserve all such variations and modifications as fall within the spirit and purview of the appended claims.

I claim:

1. In a ribbon reversing mechanism, the combination with a pair of spools and actuating ratchets therefor, of a slide and means for reciprocating the same, a ratchet-driving pawl pivoted on said slide and engageable with either of said ratchets, a pawl-shifting arm pivoted on said slide with its free end adapted to swing across the pivot axis of said pawl, a spring connecting the free end of said arm to said pawl, and means controlled by the rolls of ribbon on said spools for swinging said arm.

2. In a ribbon reversing mechanism, the combination with a pair of spools and actuating ratchets therefor, of a slide and means for reciprocating the same, a ratchet-driving pawl pivoted on said slide and engageable with either of said ratchets, a pawl-shifting arm pivoted on said slide with its free end adapted to swing across the pivot axis of said pawl, a spring connecting the free end of said arm to said pawl, means controlled by the rolls of ribbon on said spools for swinging said arm, and a detent device for releasably holding said arm in either position.

3. In a ribbon reversing mechanism, the combination with a pair of spools and actuating ratchets therefor, of a slide and means for reciprocating the same, a ratchet-driving pawl pivoted on said slide and engageable with either of said ratchets, a lever pivoted on said slide, said lever having a pawl-shifting arm connected to said pawl and a pair of oppositely extending arms carrying lateral striker lugs, and spring-actuated devices engaged with and controlled by the rolls of ribbon on said spools adapted to be alternately struck by said striker lugs to thereby swing said lever and shift said pawl.

4. In a ribbon reversing mechanism, the combination with a pair of spools and actuating ratchets therefor, of a slide and means for reciprocating the same, a ratchet-driving pawl pivoted on said slide and shiftable between said ratchets, a lever pivoted on said slide, said lever having a pawl-shifting arm connected to said pawl and a pair of oppositely extending arms carrying lateral striker lugs, a pair of pivoted arms spring pressed against the ribbon rolls on said spools, respectively, and a pair of arms rigid with said first-named arms, respectively, and having their free ends movable into and out of the paths of travel of said striker lugs.

5. In a ribbon reversing mechanism, the combination with a pair of spools and actuating ratchets therefor, of a slide and means for reciprocating the same, a ratchet-driving pawl pivoted on said slide and shiftable between said ratchets, a lever pivoted on said slide, said lever having a pawl-shifting arm connected to said pawl and a pair of oppositely extending arms carrying lateral striker lugs, a pair of pivoted yokes each having one of its arms lying in contact with the ribbon roll on one of said spools and the free end of its other arm movable into and out of the path of travel of one of said striker lugs, and a spring operating to maintain said yokes in contact with the ribbon rolls on said spools.

6. In a ribbon reversing mechanism, the combination with a pair of spools and actuating ratchets therefor, of a slide and means for reciprocating the same, a ratchet-driving pawl pivoted on said slide and shiftable between said ratchets, a lever pivoted on said slide, said lever having a pawl shifting arm connected through a pull spring to

said pawl and a pair of oppositely extending arms carrying lateral striker lugs, a pair of pivoted yokes having corresponding arms thereof extending between said spools and lying in contact with the ribbon rolls on said spools, respectively, and having the free ends of their other corresponding arms movable into and out of the paths of travel of said striker lugs, respectively, and a pull spring connecting the transverse members of said yokes and operating to maintain the spool-engaging arms of the latter in contact with the ribbon rolls on said spools.

HORACE B. McCABE.