Oct. 9, 1934. D'ARCY A. YOUNG ET AL 1,976,318

PHOTOGRAPHIC PRINTING APPARATUS

Filed July 1, 1933 5 Sheets-Sheet 1

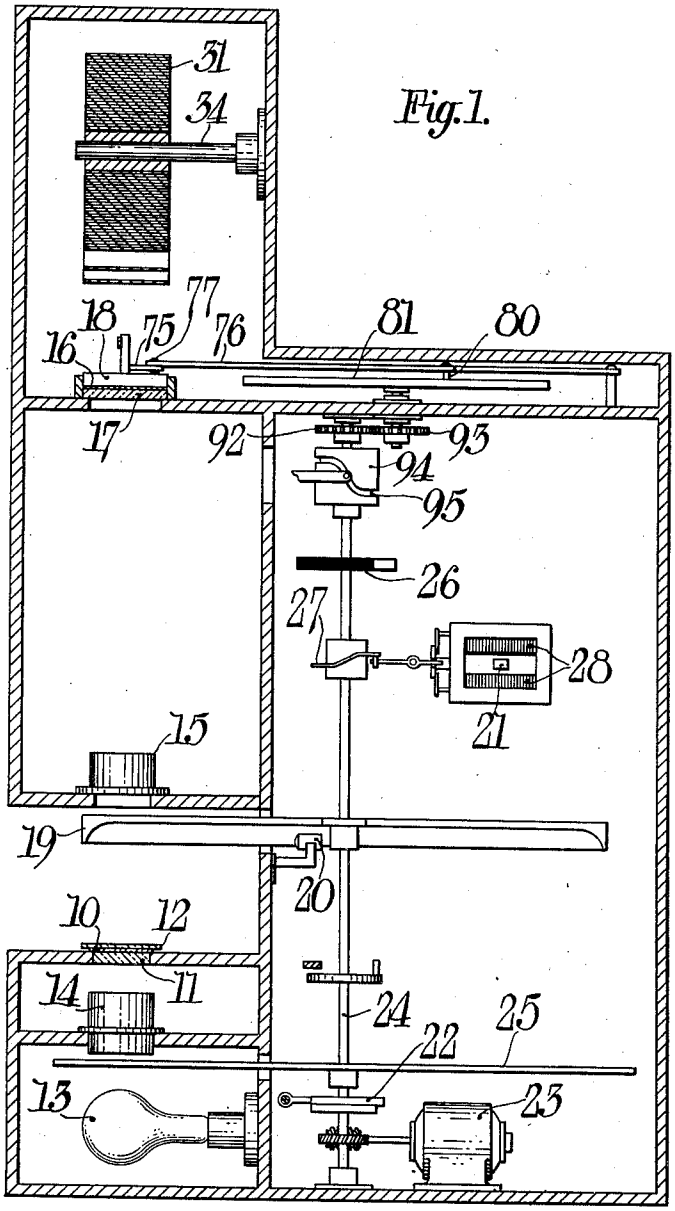

Fig. 1.

Inventors:

D'Arcy A. Young, Elmer O. Wangerin and Roy S. Hopkins,

By Newton M. Perrins
Rolla N. Carter

Attorneys.

Oct. 9, 1934. D'ARCY A. YOUNG ET AL 1,976,318

PHOTOGRAPHIC PRINTING APPARATUS

Filed July 1, 1933 5 Sheets-Sheet 2

Fig. 2.

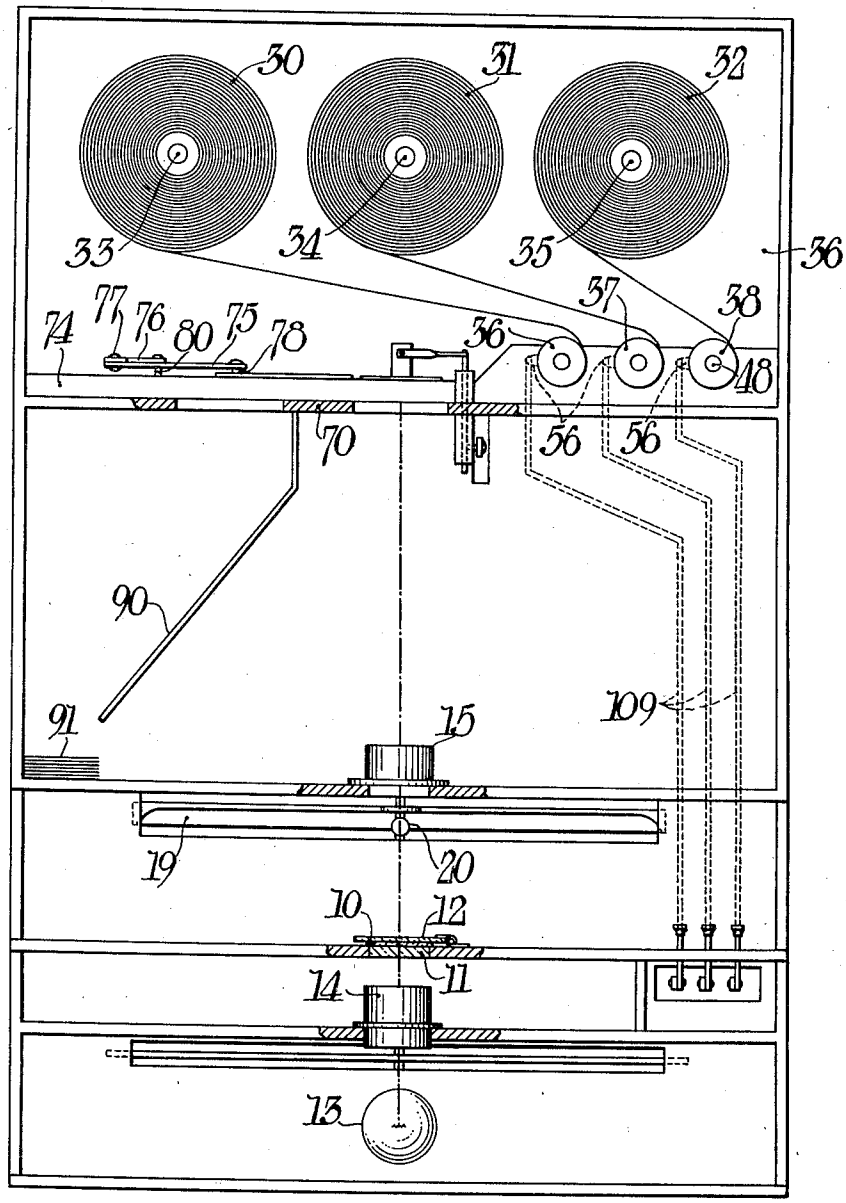

Inventors:
D'Arcy A. Young, Elmer O. Wangerin and
Roy S. Hopkins,
By Newton M. Currier
Rolla N. Carter
Attorneys.

Oct. 9, 1934. D'ARCY A. YOUNG ET AL 1,976,318

PHOTOGRAPHIC PRINTING APPARATUS

Filed July 1, 1933 5 Sheets-Sheet 3

Fig. 3.

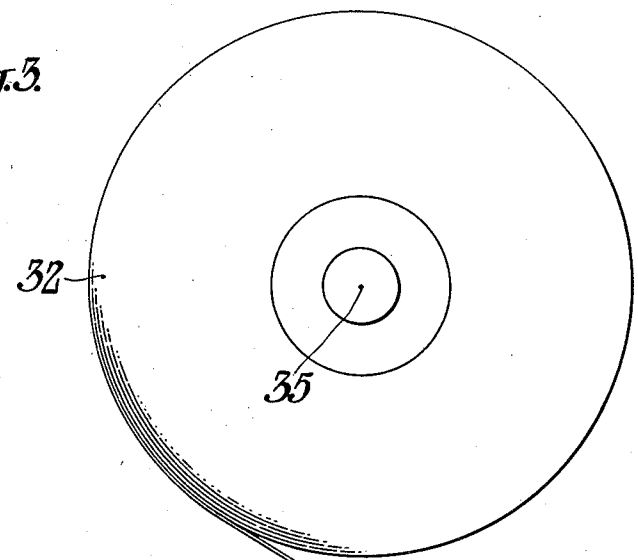

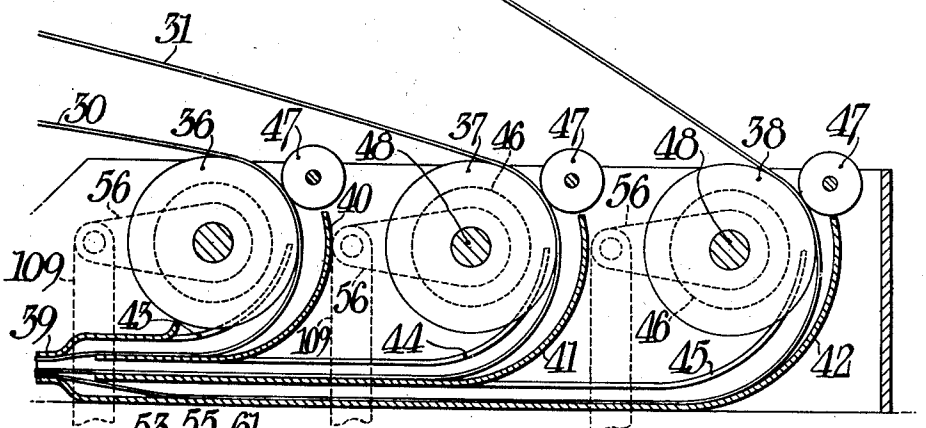

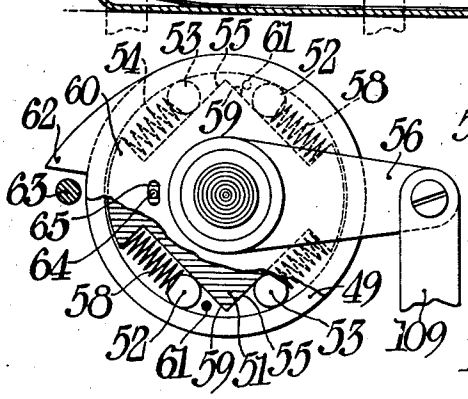

Fig. 5.

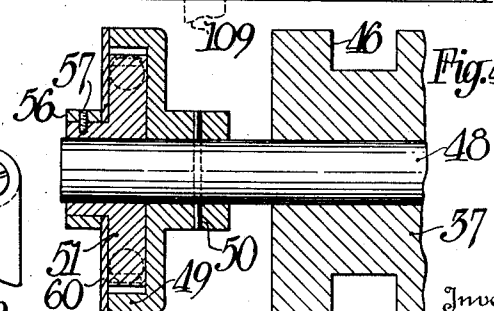

Fig. 4.

Inventors:
D'Arcy A. Young, Elmer O. Wangerin
and Roy S. Hopkins,

By Newton M. Perrins
Rolla H. Carter
Attorneys.

Oct. 9, 1934. D'ARCY A. YOUNG ET AL 1,976,318

PHOTOGRAPHIC PRINTING APPARATUS

Filed July 1, 1933 5 Sheets-Sheet 4

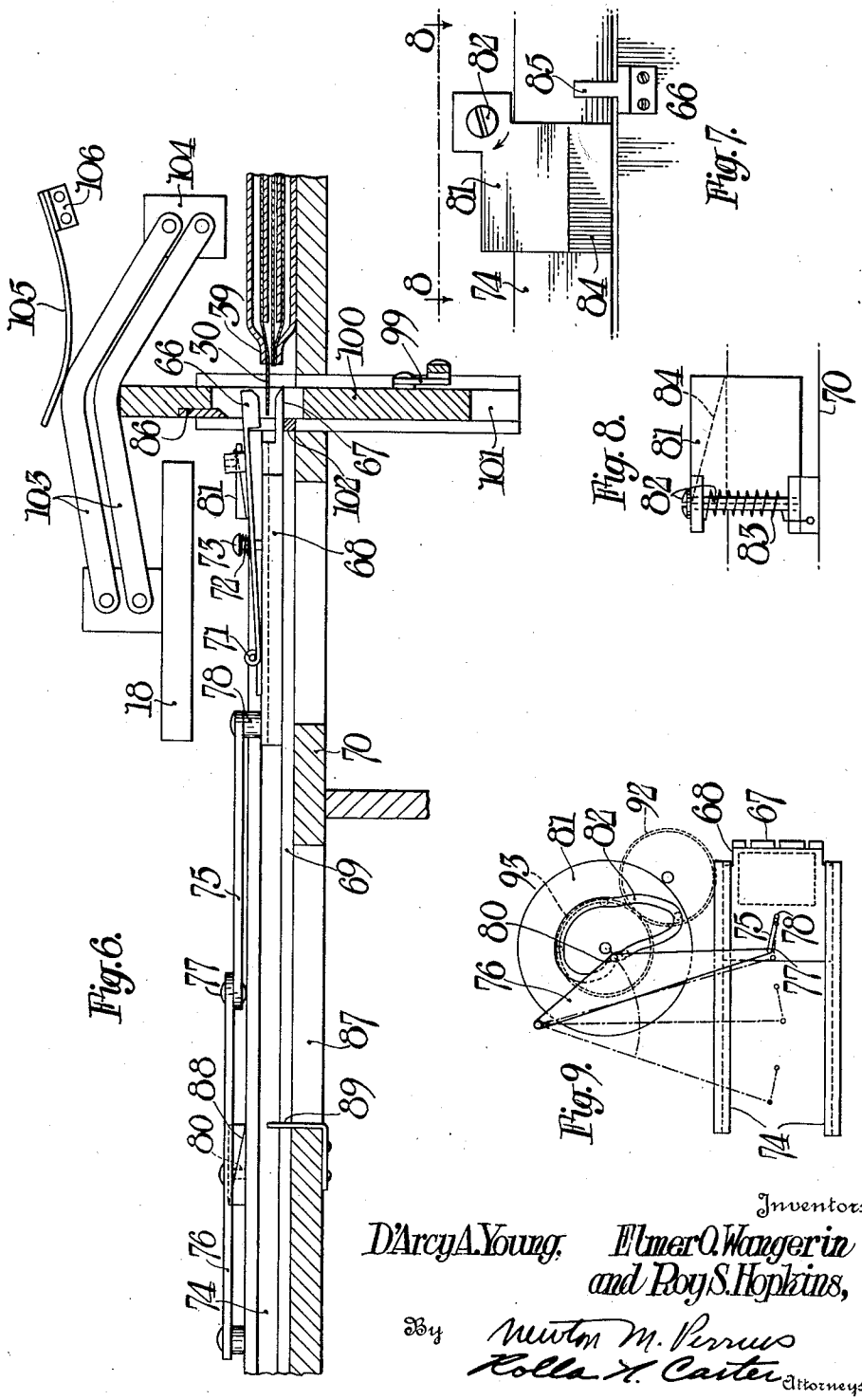

Inventors:
D'Arcy A. Young, Elmer O. Wangerin and Roy S. Hopkins,
By Newton M. Perrus
Rolla K. Carter Attorneys.

Oct. 9, 1934. D'ARCY A. YOUNG ET AL 1,976,318

PHOTOGRAPHIC PRINTING APPARATUS

Filed July 1, 1933 5 Sheets-Sheet 5

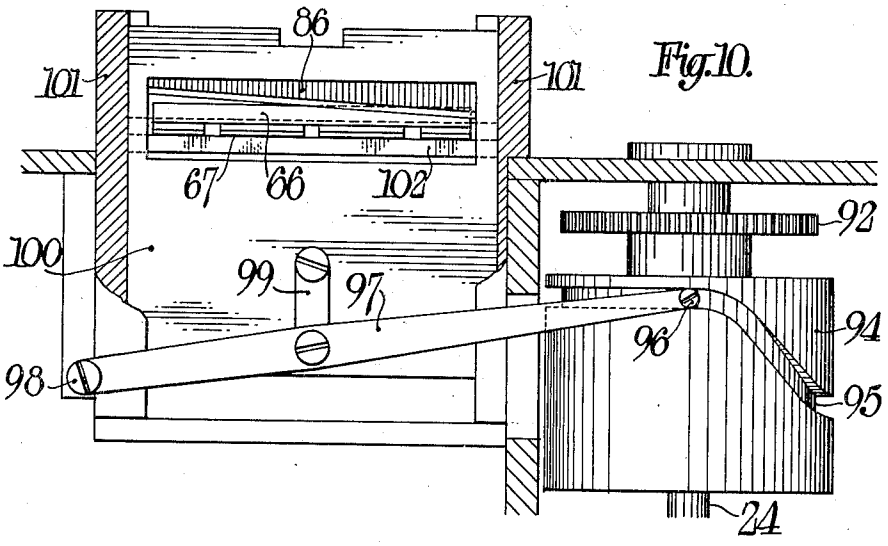

Fig. 10.

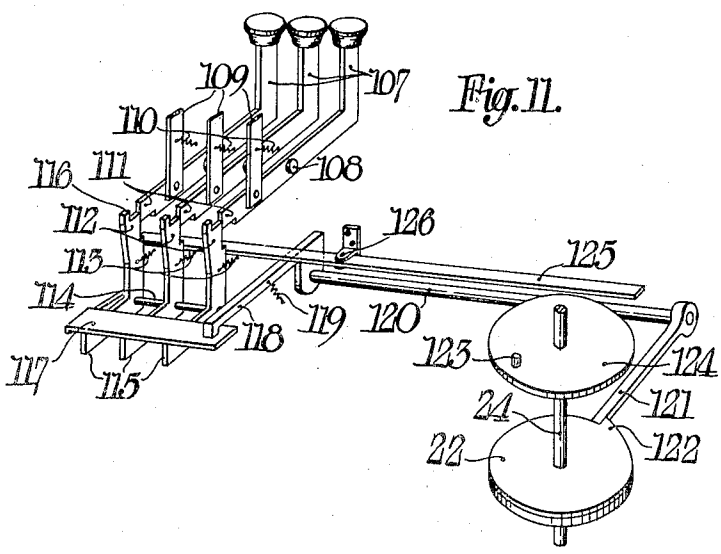

Fig. 11.

Inventors:

D'Arcy A. Young, Elmer O. Wangerin and Roy S. Hopkins,

By Newton M. Perrins

Rolla H. Carter Attorneys.

Patented Oct. 9, 1934 1,976,318

UNITED STATES PATENT OFFICE

1,976,318

PHOTOGRAPHIC PRINTING APPARATUS

D'Arcy A. Young, Elmer O. Wangerin, and Roy S. Hopkins, Rochester, N. Y., assignors to Eastman Kodak Company, Rochester, N. Y., a corporation of New York

Application July 1, 1933, Serial No. 678,668

8 Claims. (Cl. 88—24)

This invention relates to photographic printing apparatus and more particularly to an arrangement whereby a selected grade of printing paper may be advanced into position to be exposed to light transmitted by a record being printed and thereafter cut off and discharged from the apparatus.

In making prints from photographic records differing in photographic quality and subject matter it is generally desirable to use a certain grade of sensitive paper for printing from a negative having certain characteristics in order to obtain a satisfactory print.

In the apparatus of this invention the pressing of a single selector key corresponding to the grade of printing paper it is desired to use, initiates a cycle of operation which includes advancing the selected paper into printing position, exposing the paper to light transmitted by a negative being printed, cutting off the exposed paper and ejecting it from the apparatus.

The novel features which are believed to be characteristic of this invention are set forth with particularity in the appended claims. The invention itself, however, both as to its organization and method of operation will be best understood by reference to the following description taken in connection with the accompanying drawings in which:

Fig. 1 is a sectional side elevation showing the relative location of the main mechanical elements of a structure in which the invention is incorporated;

Fig. 2 is a front elevation partly in section showing the assembly of the paper selecting means as associated with the printer per se;

Fig. 3 is a front elevation partly in section showing the paper feed rollers and guides for properly directing the paper;

Fig. 4 is a fragmentary view in section showing a free running clutch on the roller shaft;

Fig. 5 is a plan view partly in section of this clutch and its operating member;

Fig. 6 is a sectional side view of a portion of Fig. 2 showing the device for gripping and feeding the paper;

Figs. 7 and 8 are top and back views respectively of the cam means for actuating the paper gripping device shown in Fig. 6;

Fig. 9 is a detail showing the shape of the plate cam which controls the various positions of the paper before, during and after printing;

Fig. 10 is a detail showing the paper cutting device; and

Fig. 11 is a perspective of the control keys and the clutch operating mechanism.

For the purpose of this specification the invention will be described as applied to a printer provided with the exposure control arrangement described and claimed in copending application, Serial Number 625,726 filed July 29, 1932 by Mr. Tuttle and Mr. Young, one of the present inventors.

In the embodiment illustrated in Figs. 1 and 2, a negative 10 to be printed is held flat on a transparent support 11 by a hinged member 12 which may be a rectangular frame or a transparent plate. Light from a source 13 is concentrated onto the negative 10 by a condenser lens 14 and the negative 10 so illuminated is imaged by an objective 15 onto a sensitive paper 16 held on a printing panel 17 by a suitable platen 18. The actual printing operation may be automatic and is fully described in the above identified application. The light transmitted by the negative 10 is directed by a curved shutter 19 onto a thermopile 20 the response of which determines the position of a contact member 21. To start the printing operation a clutch 22 connects a continuously rotating motor 23 to a control shaft 24 which carries a transparent disc 25, the shutter 19, a drum switch 26 and a cam 27 which controls the clamping and unclamping of resistances 28 upon the contact member 21. During one revolution of the shaft 24 an exposure is made and upon completion of a single revolution the clutch 21 is disengaged until another printing operation is started.

The several rolls of different grades of paper, 30, 31 and 32 are rotatably supported by three stub shafts 33, 34 and 35, respectively, mounted in a compartment 36 provided above the printing panel 17. As best shown in Fig. 3 the papers 30, 31 and 32 of different grades are trained over rollers 36, 37 and 38 respectively, which may be of rubber to form a friction surface, and directed into a feeding guide 39 by curved guide members 40, 41 and 42, respectively, cooperating with other curved guide members 43, 44 and 45 respectively, the three ends of which extend into grooves 46 provided in the rollers 36, 37 and 38.

The paper is held in contact with the friction surfaces of the rollers 36, 37 and 38 in any suitable manner as by rollers 47. Shafts 48 carrying the rollers 36, 37 and 38 are provided with clutch members for the purpose now to be described. As shown in Figs. 4 and 5 these clutch members are of the well known roller type and comprise an annular flange 49 secured to the

shaft 48 by a pin 50 and surrounding a member 51 rotatable on the shaft 48, and rollers 52 and 53. Springs 54 normally hold the rollers 53 in position to wedge between flange 49 and the inclined seats 55 of the member 51 so that the flange 49 and therefore its shaft 48 and friction roller will rotate with the member 51 upon its being rotated in a counter-clockwise direction as viewed in Fig. 5 and also prevent rotation of the shaft 48 in a clockwise direction. Such rotation of the member 51 is obtained by movement of an arm 56 secured thereto by a set screw 57. Springs 58 normally hold the rollers 52 in position to bind between the flange 49 and the inclined seats 59 of the member 51 to rotate the member 51 with the flange 49. A plate 60 provided with spaced pins 61 controls the position of the rollers 52 relatively to the inclined seats 59 in the following manner:

The plate 60 is mounted for limited rotation on the smooth portion of the member 51 and is provided with a projection 62 adapted to engage a stop 63 fixed to the frame of the apparatus in any suitable manner. A pin 64 carried by the member 51 projects into a slot 65 in the plate 60 to limit the relative rotation between the plate 60 and the member 51, and the absolute rotation of the plate 60 is limited by the stop 63. It is thus seen that by means of this clutch the shaft 48 may be positively rotated through a small angle by movement of the arm 56 and that the shaft 48 may be driven in a counter-clockwise direction (Fig. 5) by the photographic paper trained over the friction roller mounted on the shaft 48.

A small upward movement of one of the arms 56 will rotate its corresponding roller, for example, the roller 36 to advance the paper strip 30 beyond the end of the feeding guide 39 and into position to be seized between a pair of pull down jaws 66 and 67 shown in Fig. 6. The jaw 67 is an extension of a plate 68 mounted to slide on a runway 69 mounted on the base 70 of the paper roll compartment 36. The jaw 66 is pivotally mounted at 71 on the plate 68 and is biased into engagement with the jaw 67 by a coiled spring 72 supported by a headed stud 73 screwed into the plate 68. The plate 68 is mounted in a pair of grooved slideways 74, parts of which form the runway 69, and adapted to be moved back and forth by means of a linkage 75 and 76 hinged together at 77 and secured at one end to a post 78 carried by the plate 68 and at its other end to a post 79 fixed to the base 70 of the paper compartment. The desired movement of the plate 68 is obtained by means of a cam follower 80 cooperating with a plate cam 81 provided with a groove cam 82, as shown in Fig. 9. A jaw opening cam rotatably carried by a headed spindle 82 mounted on the base 70 is biased by a coiled spring 83 to a position over the grooved slideway 74 so that its inclined surface 84 lies in the path of a guide arm 85 secured by screws 86 to the pivoted jaw 66 as best shown in Fig. 7. As the plate 68 is moved toward the paper 30 extending from the paper guide 39 the guide arm 85 rides on the inclined surface 84 to elevate the jaw 66 as shown in Fig. 6. The open jaws 66 and 67 are over the end of the paper 30 and further movement of the plate 68 carries the guide arm 85 beyond the cam surface 84 permitting the compressed spring 72 to force the jaws 66 and 67 into paper gripping position.

Upon return movement of the plate 68 the arm 85 engages the perpendicular end of the cam surface 84 and rotates it against the bias provided by the spring 83 sufficiently to permit the arm 85 to pass, after which the spring 83 returns it to the normal position shown. Under the guidance of the rotating plate cam 81 the pull down jaws 66 and 67 move the paper 30 into position over the exposure panel 17 where it remains stationary during the exposure and is severed from the main strip of paper 30 by a shear 86 as hereinafter described. After being exposed the severed piece of paper is moved further to the left as viewed in Fig. 6 and when it is over the discharge opening 87 the guide arm 85 rides upon an inclined cam 88 secured to the slideway 74. This action separates the jaws 66 and 67 and permits a stop 89 to hold the severed strip of paper against further movement whereby the jaws 66 and 67 move on and the paper falls through the discharge opening 87 to be directed by a guide chute 90 to the pile of exposed strips 91.

The plate cam 81 for governing the movement of the paper pull down 68 is driven by the main shaft 24 through gears 92 and 93 and has a shape such that the paper is held over the printing aperture 17 for a predetermined part of the revolution of the shaft 24 and therefore for a predetermined period of time. During the time the paper is stationary, a cam drum 94 provided with a cam groove 95 operates through a cam follower 96, a lever 97 pivoted at 98 and secured by a connecting link 99 to an apertured plate 100 carrying the shear 86 to lower the plate 100 in its U-shape guide 101 to sever the paper 30 due to the shearing action between the shear 86 and a straight edge 102.

The platen 18 is supported by two arms 103 pivotally secured to a block 104 mounted on a side of the paper compartment of the apparatus. The arms 103 form two sides of a parallelogram and thereby insure a parallel relationship at all times between the platen 18 and the printing panel 17. The lower arm 103 rests on the top of a shear carrying plate 100 and is raised and lowered by the operation of the plate 100 under the control of the cam 95. To assure sufficient pressure of the platen 18 against the paper 30 during printing, a spring arm 105, secured to a bracket 106 on the compartment wall, may be provided to exert a downward force on the upper platen arm 103.

For selecting the grade of printing paper to be used and for initiating a printing cycle, three levers 107 pivoted intermediate their ends at 108 are provided. The levers 107 are connected to the arm 56 of the friction rolls 36, 37 and 38 by rods 109 each of which is biased downwardly by a tension spring 110. The depression of any one of the levers 107 operates through rod 109 and arm 56 to rotate the corresponding friction roll, for example, the roll 36 through a small angle in a clockwise direction as viewed in Fig. 3 and thereby, as described above, advance the paper 30 into position to be seized by the pull down jaws 66 and 67. Each of the levers 107 is provided at its operating end with an extension 111 which abuts against an opposing latch member 112 and holds it in the position shown in Fig. 12 against the tension of a spring 103. Each of the latch members 112 form one arm of a bell crank pivoted at 114 and having another arm 115. The functions performed by these bell cranks are identical and will be described in connection with one only.

When the lever 107 is depressed to select the desired paper its extending end 111 is elevated and the spring 113 rotates the bell crank in a

clockwise direction until a latch 116 engages the end 111 of the lever 107. This rotation of the bell crank elevates the arm 115, a plate 117 common to all three arms 115, and a crank 118 yieldably held in contact with the plate 117 by a coiled spring 119. The crank 118 is secured to a shaft 120 provided with an arm 121 which cooperates with an ear 122 carried by the clutch 22 to control the engagement and disengagement of the clutch 22. The depression of the lever 107 elevates the crank 118 to rotate the arm 121 out of the path of the ear 122 and the clutch 22 engages to rotate the shaft 24 as fully described in the above identified application. After a partial revolution of the shaft 24 a pin 123 mounted on a disk 124 carried by the shaft 24 strikes a bar 125 pivoted at 126 and causes it to force the latch member 112 against the tension of the spring 113 to the position shown in Fig. 12. This movement returns the paper, the exposed strip having been severed, into the feeding guide 39 and also returns the clutch controlling arm 121 into the path of the ear 122 to disengage the clutch 22 after one complete revolution of the shaft 24.

The operation of the apparatus as above described is as follows:

Any desired selector lever 107 is depressed. This moves the arm 121 to permit the clutch 22 to engage for one complete revolution of the shaft 24. Simultaneously therewith the push rod 109 actuates the selected friction roll, for example, roll 36 to advance the paper 30 into position to be seized by the jaws 66 and 67 which, actuated through gears 92 and 93 and the plate cam 81, then pull it into position over the printing panel 17.

The paper is then pressed flat by the platen 18 and cut from the main strip by the shear 86 operated by the drum cam 95 carried by the shaft 24. The shape of the cam groove 82 in the plate cam 81 is such that the paper is held over the printing panel 17 for a predetermined time after which the platen 18 is raised, the jaws 66 and 67 continue their pulling movement until they are caused to open by the cam 88 at which point the paper is removed from the jaws by the ejector 89 and falls through the opening to the interior of the apparatus. The further movement of the shaft 24 causes the mechanism to return to its original position at which the arm 121 is dropped back into the path of the clutch ear 122 and causes the clutch 22 to release thus preventing any further movement of the shaft 24 until one of the selector levers 107 is again depressed. From the above it will be seen that we have provided a printing apparatus which is substantially automatic. A negative having been properly inserted the pressing of a single key connects the shaft to the motor, selects the desired printing paper and moves it into position on the printing panel where a platen is brought into pressed engagement therewith. In proper timed relation with the above, a thermopile, responsive to the density of the negative, selects the proper amount of resistance to be inserted in the lamp circuit which is then lighted and the exposure started by a rotating contact element on the main shaft. After a predetermined angle of rotation of the shaft, the light is rendered ineffective and the exposed paper removed from the printing panel and discharged from the machine.

While we have described in detail a specific embodiment of the invention it is to be understood that various modifications will readily suggest themselves to those skilled in this art without departing from the spirit of the invention or the scope of the appended claims.

What we claim as new and desire to secure by Letters Patent of the United States is:—

1. Apparatus of the class described comprising in combination, a plurality of supports for rolls of sensitized strip material and individual feed rolls for each strip of material, material gripping means, a separate lever for rotating at a predetermined angle each of said feed rolls to advance the strip material into position to be seized by said gripping means, a source of motive power, a rotary shaft normally disconnected from said source of power, a clutch member operative to connect said shaft to said source of power to impart one complete revolution to the shaft, means controlled by each of said separate levers for engaging said clutch whereby the shaft is rotated a complete revolution, means controlled by said rotating shaft for actuating said gripping means to feed said material and draw it into printing position, gearing means operative under the control of said shaft to cut the length of material in the printing position, a platen adapted to be spring pressed on the material simultaneously with the cutting operation and to be removed after a predetermined time, said gripping means being adapted upon further rotative movement of said shaft to remove said cut material from the printing position and eject it from the apparatus.

2. In apparatus of the class described, the combination with a frame having a printing panel and a discharge opening, of pull down jaws slidably mounted on the frame, a plurality of rolls of sensitized paper, selective means for advancing from a desired roll a length of paper into position to be seized by said pull down jaws, cam control means for causing said jaws to seize the advanced paper, move it into position over the printing panel, hold it there for a predetermined time, and then pull it through the discharge opening where it is ejected from the apparatus, means for cutting the length of paper while it is positioned over the printing panel, a rotary shaft and a source of motive power, means controlled by the paper selective means for connecting the shaft to the source of power for one complete revolution of the shaft, and a plurality of means carried by the shaft for actuating said cam control means and said paper cutting means in proper timed relation.

3. An apparatus comprising in combination, a frame provided with a printing panel and a discharge opening, a pull down device slidably mounted on the frame, a plurality of supports for different grades of sensitized paper, a source of motive power and a rotary shaft, a clutch member for connecting and disconnecting the shaft to the source of power, means for selectively feeding any one of the different grades of paper into position to be gripped by the pull down device and for engaging said clutch member to impart rotative movement to said shaft, means actuated by said shaft for causing the pull down device to grip the selected paper, advance it to the printing panel for a printing and cutting operation and then advance it to the discharge opening where it is ejected from the apparatus, and mechanism for disengaging said clutch when said pull down device has returned to its initial position.

4. An apparatus of the class described, the combination with a frame, of a plurality of rolls of different grades of sensitized paper rotatably

supported on said frame, a plurality of push rods for selectively feeding paper from said rolls, pull down mechanism adapted upon actuation to seize the paper selectively fed and advance it to printing position, means including a rotatable shaft for actuating said pull down mechanism, a clutch for governing the rotation of said shaft, a plurality of movable levers for operating said push rods and means controlled by the movement of any one of said levers for operating said clutch.

5. Photographic printing apparatus including a printing panel, a pull down device for advancing a strip of sensitized paper into position on said panel, a plurality of receptacles for sensitized papers of different printing characteristics, a plurality of manually operable levers for selectively feeding said sensitized papers to the pull down device, mechanism for operating said pull down device, and means controlled by the operation of any one of said levers for actuating said mechanism.

6. In a photographic printing machine the combination with a printing panel, of a plurality of receptacles for sensitized paper of different printing characteristics, means for advancing paper from any one of said receptacles into position over said panel, a reciprocating knife for cutting the length of paper positioned on said panel, a platen spring pressed toward said panel and normally held spaced therefrom by said knife, whereby the platen is pressed against the paper on said panel when the paper is cut and raised therefrom when the knife returns to its normal position, and means for removing said cut length of paper from said panel after the platen has been raised.

7. Photographic printing apparatus including a printing panel, a plurality of receptacles for sensitized papers of different printing characteristics, a pull down device for advancing a strip of paper into position on said panel, a source of power, a clutch between said source of power and said pull down device, a plurality of manually operable levers for tripping said clutch, and mechanism operated by the different levers for feeding paper from different receptacles to said pull down device said mechanism and said clutch being operable by the operation of a single lever.

8. In a photographic printing machine the combination with a printing panel of means for mechanically advancing different printing papers thereto including a supply of different printing papers, a paper advancing means for each supply of paper, a selective manual control for each advancing means, mechanism adapted to move paper first moved by the paper advancing means, a motor for operating said mechanism through a cycle of movements through a cam and cam follower, said cam and cam follower being shaped to move the paper to the printing panel, to hold the paper at rest on the printing panel and to discharge the printed paper from the printing panel.

D'ARCY A. YOUNG.
ELMER O. WANGERIN.
ROY S. HOPKINS.