(12) INTERNATIONAL APPLICATION PUBLISHED UNDER THE PATENT COOPERATION TREATY (PCT)

(19) World Intellectual Property Organization
International Bureau

(43) International Publication Date
27 October 2011 (27.10.2011)

PCT

(10) International Publication Number
WO 2011/131493 A2

(51) International Patent Classification:
F02K 7/08 (2006.01)

(21) International Application Number:
PCT/EP2011/055443

(22) International Filing Date:
7 April 2011 (07.04.2011)

(25) Filing Language: English

(26) Publication Language: English

(30) Priority Data:
1006575.3 20 April 2010 (20.04.2010) GB

(71) Applicant *(for all designated States except US)*: **ROLLS-ROYCE plc** [GB/GB]; 65 Buckingham Gate, London SW1E 6AT (GB).

(72) Inventors; and

(75) Inventors/Applicants *(for US only)*: **ROWE, Arthur L** [GB/GB]; 11 South Avenue, Littleover, Derby Derbyshire DE23 6BA (GB). **MASON, Samuel Alexander** [GB/GB]; 35 Redshaw Street, Derby DE1 3SH (GB).

(74) Agents: **BARCOCK, Ruth Anita** et al.; PO Box 3, Bristol South Gloucestershire BS34 7QE (GB).

(81) Designated States *(unless otherwise indicated, for every kind of national protection available)*: AE, AG, AL, AM, AO, AT, AU, AZ, BA, BB, BG, BH, BR, BW, BY, BZ, CA, CH, CL, CN, CO, CR, CU, CZ, DE, DK, DM, DO, DZ, EC, EE, EG, ES, FI, GB, GD, GE, GH, GM, GT, HN, HR, HU, ID, IL, IN, IS, JP, KE, KG, KM, KN, KP, KR, KZ, LA, LC, LK, LR, LS, LT, LU, LY, MA, MD, ME, MG, MK, MN, MW, MX, MY, MZ, NA, NG, NI, NO, NZ, OM, PE, PG, PH, PL, PT, RO, RS, RU, SC, SD, SE, SG, SK, SL, SM, ST, SV, SY, TH, TJ, TM, TN, TR, TT, TZ, UA, UG, US, UZ, VC, VN, ZA, ZM, ZW.

(84) Designated States *(unless otherwise indicated, for every kind of regional protection available)*: ARIPO (BW, GH, GM, KE, LR, LS, MW, MZ, NA, SD, SL, SZ, TZ, UG, ZM, ZW), Eurasian (AM, AZ, BY, KG, KZ, MD, RU, TJ, TM), European (AL, AT, BE, BG, CH, CY, CZ, DE, DK, EE, ES, FI, FR, GB, GR, HR, HU, IE, IS, IT, LT, LU, LV, MC, MK, MT, NL, NO, PL, PT, RO, RS, SE, SI, SK, SM, TR), OAPI (BF, BJ, CF, CG, CI, CM, GA, GN, GQ, GW, ML, MR, NE, SN, TD, TG).

Declarations under Rule 4.17:

— *as to applicant's entitlement to apply for and be granted a patent (Rule 4.17(ii))*

Published:

— *without international search report and to be republished upon receipt of that report (Rule 48.2(g))*

(54) Title: AIR BREATHING REACTION PROPULSION ENGINE

FIG. 3

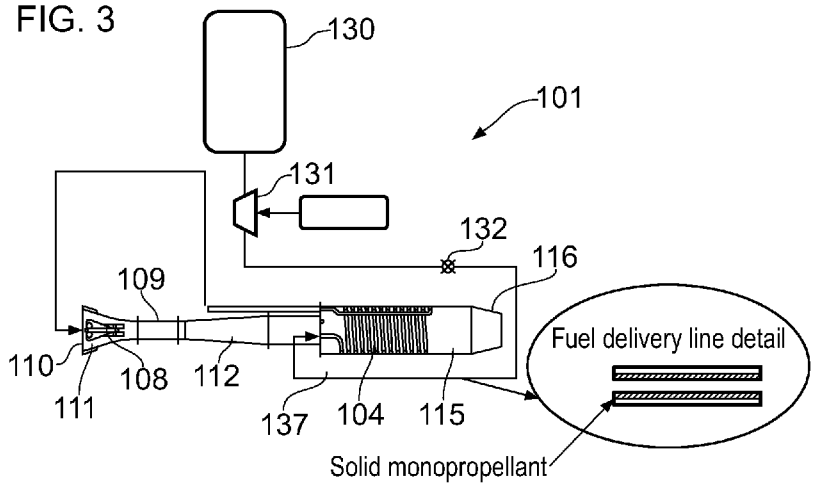

(57) Abstract: An air breathing reaction propulsion engine has: an open-ended cylindrical combustion chamber having an upstream end and a downstream end, an exhaust propulsion nozzle located at the downstream end of the combustion chamber, and an ejector system located at the upstream end of the combustion chamber. The ejector system comprises an open-ended cylindrical structure having an upstream end through which air is drawn into its interior, and a downstream end in open communication with the combustion chamber. The engine further has a fuel supply system comprising a fuel injector located within the ejector system, a source of pressurised fluid fuel, and a fuel heating coil disposed around the wall of the cylindrical combustion chamber through which the pressurised fluid fuel is supplied to the fuel injector. Under normal running operation, the pressurised fluid fuel is heated in the coil, and the heated fuel is expelled at the fuel injector into the cylindrical structure thereby establishing a pressure differential which draws air into the ejector system to form a combustible fuel/air mixture which is supplied to the combustion chamber. The fuel supply system further comprises a charge-carrying section adapted to carry a charge of a solid fuel which is combusted during start-up operation to produce combustion products that pre-heat the heating coil.

WO 2011/131493 A2

AIR BREATHING REACTION PROPULSION ENGINE

The present invention relates to air breathing reaction propulsion engines.

WO 2005017339 proposes an air breathing reaction propulsion engine which provides a simple, cheap, lightweight and relatively safe means of jet propulsion. The engine can avoid the burst hazard of high speed rotating machinery, the explosion hazard of liquid fuel rocket engines in general, and the detonation hazard of potentially detonable fuel mixtures.

Figure 1 is an overall view of an engine according to WO 2005017339 shown in a section along its longitudinal axis, and Figure 2 shows detail of the engine inlet geometry and starting means of the engine of Figure 1. The engine 1 of WO 2005017339 uses a liquid fuel pumped under high pressure through a fuel inlet pipe 2, preferably up to a maximum pressure of the order of 30 bar from a fuel source (not shown) by a fuel pump (also not shown). The liquid fuel is pumped under pressure through a restrictor 3, which produces sufficient pressure drop to avoid instability in the downstream fuel heating equipment, into a fuel heating coil 4 located in the wall of open-ended cylindrical combustion chamber 5. The fuel is strongly heated, vaporised and partly cracked by heat from the combustion gases before leaving the fuel heating coil 4 through a fuel delivery tube 6, a nozzle feed tube 7 and into a primary nozzle 8 located towards the upstream end of an ejector system comprising a mixer duct 9 and an air inlet duct 11. The duct 11 is disposed at the upstream end of the combustion chamber 5 and co-axially therewith. Further cracking of the fuel may take place in the nozzle feed tube 7. The high-speed jet of fuel from the primary nozzle 8 entrains air into a mixing section in the interior of the inlet duct 11 of the ejector system. A plume of fuel/air mixture exits the ejector system in a downstream direction through various stages of diffusion before the mixed flow enters the combustion chamber 5. The burned mixture gives up some heat to the fuel-heating coil 4, and then exhausts through a propulsion nozzle 16 to provide the engine thrust.

The liquid fuel can be methanol with a small percentage of nitromethane added. Methanol is a preferred fuel due to its relatively low molecular weight and high stoichiometric fuel-air ratio. The low molecular weight increases the exhaust velocity from the primary nozzle 8. The high stoichiometric fuel-air ratio allows a larger pressure rise and hence thrust to be obtained at maximum power. The nitromethane additive is beneficial because it has a low autoignition temperature, and allows an immediate "quick relight" to be obtained in the event of flameout. High fuel pump pressures allow the use of smaller and lighter fuel heating equipment, and give a higher exhaust velocity from the primary nozzle 8.

The vapourised and partly cracked fuel exhausts at high velocity through the primary nozzle 8 into the mixer duct 9. As shown in Figure 2, the primary nozzle 8 is preferably a convergent-divergent nozzle with a substantial ratio of exit area to throat area.

In the ejector system, during operation, air is drawn through inlet holes 10 into the air inlet duct 11, and mixes with the high velocity fuel stream in the mixer duct 9. This inlet arrangement shown in Figures 1 and 2 is suitable for internal installation, or for bench running. For external installation, various conventional types of intakes known in the prior art could be used, although preferably fixed geometry intakes for reasons of cost and weight. Typical intake types are pitot for subsonic and low supersonic Mach numbers; cone and wedge intakes for higher supersonic Mach Numbers.

Preferably the mixer duct 9 is parallel, as shown in Figure 1. A parallel mixer duct 9 causes the static pressure to rise during the mixing process, but is also easier to manufacture. The mixed flow enters a diffuser 12 and tailpipe 13 where further rises in static pressure occur accompanied by reductions in average velocity.

The flow continues into a dump duct 14, intermediate the ejector system and the combustion system, where a sudden increase of area occurs, and then into the primary

burning zone 15 of the combustor 5. Dump duct 14 has a twofold purpose. First, it acts as another stage in the diffusion process, increasing the static pressure and reducing the flow velocity, and second, it increases the turbulence in the flow immediately in front of the combustor 5 greatly improving the stability of burning therein.

The flow enters the combustor 5 where a flame is stabilised in the doughnut shaped vortex shed from the exit of the dump duct 14. Burning continues through the length of the combustor 5, and the highly turbulent burning flow supplies heat to the fuel heating coil 4 both directly by convection and radiation, and indirectly by conduction from the walls of the combustor 5. The total internal volume of the combustor (5) is just sufficient that burning can be completed under the least favourable operational conditions. Minimising the volume of the combustor 5 is important in reducing the likelihood of instabilities in the main gas path caused by the coupling between fluctuations in heat release causing pressure changes in the combustor 5, leading to air flow and hence stoichiometry changes in the mixer duct 9.

Finally the burned flow leaves the propulsion nozzle 16 at high velocity to produce the engine thrust. The internal contour shape of the nozzle 16 may depend on the application. For operation at low Mach numbers only, a plain convergent nozzle as shown in Figure 1 is most appropriate, whereas for operation at higher Mach numbers, a convergent-divergent nozzle is preferred.

Figure 2 also shows details of the arrangement construction of a supplementary fuel supply system comprising a start fuel inlet 17, start fuel pipe 18 and start fuel nozzle 19. Engine starting is accomplished by feeding a supplementary gaseous fuel into the start fuel inlet 17 from where it flows through the start fuel pipe 18 into the start fuel nozzle 19. The start fuel is preferably propane, which is easily stored as a liquid but is of lower molecular weight than butane, and also has a higher saturation pressure, both features allowing for a higher exhaust velocity from the start fuel nozzle 19. To provide the start fuel to the inlet 17, typically, the supplementary fuel supply system further comprises a separate pressurised fuel tank, a supply line, control system and valve.

The start fuel nozzle 19 is a convergent nozzle of relatively small throat diameter compared to that of the primary nozzle 8. This is necessary because the stoichiometric fuel-air ratio of the start fuel propane is substantially less than that of the primary fuel based on methanol, and the operating pressure ratio is lower. Also, the installation position of the start fuel nozzle 19 is less favourable, being off the centre line of the mixer duct 9.

The start fuel flow entrains air in the manner previously described, and the start fuel/ air mixture is ignited in the primary burning zone 15 by ignition means 20, preferably a glow plug. When the fuel heating coil 4 has been raised to operating temperature, the liquid fuel can be introduced into the engine which then operates in the previously described manner, and the start fuel flow can be shut off.

Further details of the operation of the engine 1 shown in Figures 1 and 2, and v of the engine can be found in WO 2005017339.

The start-up fuel system is problematic for a number of reasons. Firstly, it introduces additional weight and cost, requiring a separate pressurised fuel tank, supply line, control system and valve. Secondly, the start fuel pipe 18 introduces additional blockage into the airstream, which negatively impacts the steady state performance of the engine. Thirdly, a separate pressurised fuel tank complicates long term storage of a pre-fuelled engine. For example, the start-up fuel system may have to be periodically inspected for leaks. Alternatively, the start-up fuel system may need to be fuelled e.g. prior to installation on a launch platform.

Thus an object of the present invention is to improve the start-up arrangement for an air breathing reaction propulsion engine.

Accordingly, in a first aspect the present invention provides an air breathing reaction propulsion engine having:

an open-ended cylindrical combustion chamber having an upstream end and a downstream end,

an exhaust propulsion nozzle located at the downstream end of the combustion chamber,

an ejector system located at the upstream end of the combustion chamber, the ejector system comprising an open-ended cylindrical structure having an upstream end through which air is drawn into its interior, and a downstream end in open communication with the combustion chamber, and

a fuel supply system comprising a fuel injector located within the ejector system, a source of pressurised fluid fuel, and a fuel heating coil disposed around the wall of the cylindrical combustion chamber through which the pressurised fluid fuel is supplied to the fuel injector, such that, under normal running operation, the pressurised fluid fuel is heated in the coil, and the heated fuel is expelled at the fuel injector into the cylindrical structure thereby establishing a pressure differential which draws air into the ejector system to form a combustible fuel/air mixture which is supplied to the combustion chamber;

wherein the fuel supply system further comprises a charge-carrying section adapted to carry a charge of a solid fuel which is combusted during start-up operation to produce combustion products that pre-heat the heating coil.

Advantageously, by providing the charge of solid fuel the need for a complicated, heavy, expensive, supplementary gaseous fuel system can be avoided.

The engine may have any one or, to the extent that they are compatible, any combination of the following optional features.

Typically, the engine further has a diffuser section located intermediate the ejector system and the combustion chamber. The diffuser section can have a cross section the size of which has an abrupt enlargement in the downstream direction. Such an arrangement can cause a high turbulence level in the flow entering the combustion chamber, enhancing the burning rate therein.

Preferably, the coil has internal and possibly external features to enhance heat transfer from the wall of the coil to the fluid fuel, and from the combustion products of the solid fuel to the wall of the coil. For example, the coil can be lined with an internal helical coil or spring.

Preferably, the coil is located in the interior of the combustion chamber.

The charge-carrying section is typically a length of fuel line upstream of the fuel heating coil, the solid fuel charge at least partially filling the length of fuel line. For example, the solid fuel can be an annular charge lining the wall of the fuel line, or the charge may be plug which entirely blocks the fuel line.

The charge-carrying section may be replaceably dismountable from the fuel supply system, such that the fuel supply system can be provided with replacement charge-carrying sections, re-charged with solid fuel, for subsequent start-up operations. For example, when the charge-carrying section is a length of fuel line, the length may have pipe fittings at both ends which allow the length to be detached from and replaced into the fuel supply system. In an engine for one-off applications, however, such an arrangement may not be necessary.

Conveniently, the charge-carrying section can also direct the fluid fuel to the fuel heating coil during normal running operation, i.e. the charge-carrying section can be dual purpose.

Preferably, the fuel supply system further comprises a valve, such as a check valve, which prevents the combustion products of the solid fuel from travelling upstream towards the source of pressurised fluid fuel during start-up operation.

Typically, the source of pressurised fluid fuel comprises a fuel tank (which may be pressurised) for the fluid fuel upstream of the charge-carrying section. For example, in a fuel supply system in which a fuel tank, charge-carrying section and heating coil are arranged in flow series, the above-mentioned valve can conveniently be located between the fuel tank and the charge-carrying section.

The source of pressurised fluid fuel may further comprise a fuel pump which is activated at a transition from start-up operation to normal running operation to produce a flow of pressurised fluid fuel through the heating coil. For example, the fuel pump can be located between the fuel tank and the heating coil, and preferably upstream of the above-mentioned valve. The fuel pump can be driven by e.g. an electric motor, but is preferably a turbopump driven by a turbine which extracts power from vapourised, heated fuel exiting the heating coil. The turbine can also drive an electrical generator for powering e.g. engine accessories.

Indeed, a second aspect of the present invention provides an air breathing reaction propulsion engine having:

an open-ended cylindrical combustion chamber having an upstream end and a downstream end,

an exhaust propulsion nozzle located at the downstream end of the combustion chamber,

an ejector system located at the upstream end of the combustion chamber, the ejector system comprising an open-ended cylindrical structure having an upstream end through which air is drawn into its interior, and a downstream end in open communication with the combustion chamber, and

a fuel supply system comprising a fuel injector (108) located within the ejector system, a source of pressurised fluid fuel, and a fuel heating coil disposed around the wall of the cylindrical combustion chamber through which the pressurised fluid fuel is supplied to the fuel injector, such that, under normal running operation, pressurised fluid fuel is heated in the coil, and the heated fuel is expelled at the fuel injector into the cylindrical structure thereby establishing a pressure differential which draws air into the ejector system to form a combustible fuel/air mixture which is supplied to the combustion chamber;

wherein the source of pressurised fluid fuel comprises a turbopump which is activated at a transition from start-up operation to normal running operation to produce a flow of pressurised fluid fuel through the heating coil, the turbopump being driven by a turbine which extracts power from vapourised, heated fuel exiting the heating coil. The turbine can also drive an electrical generator for powering e.g. engine accessories.

In the engine of the first or second aspect, preferably, the fuel injector has a plurality of fuel delivery nozzles through which the pressurised fuel is expelled into the cylindrical structure. In this way, mixing between the fuel and the air can be enhanced, allowing a shorter mixing length. For example, the fuel delivery nozzles can be circumferentially spaced around the axis of the cylindrical structure.

A third aspect of the present invention can provide an air breathing reaction propulsion engine having: an open-ended cylindrical combustion chamber having an upstream end and a downstream end, an exhaust propulsion nozzle located at the downstream end of the combustion chamber, an ejector system located at the upstream end of the combustion chamber, the ejector system comprising an open-ended cylindrical structure having an upstream end through which air is drawn into its interior, and a downstream end in open communication with the combustion chamber, and a fuel supply system comprising a fuel injector located within the ejector system, a source of pressurised fluid fuel, and a fuel heating coil disposed around the wall of the cylindrical combustion chamber through which the pressurised fluid fuel is supplied to the fuel injector, such that, under normal running operation, pressurised fluid fuel is heated in the coil, and the heated fuel is expelled at the fuel injector into the cylindrical structure

thereby establishing a pressure differential which draws air into the ejector system to form a combustible fuel/air mixture which is supplied to the combustion chamber; wherein the fuel injector has a plurality of fuel delivery nozzles through which the pressurised fuel is expelled into the cylindrical structure. The nozzles can be circumferentially spaced around the axis of the cylindrical structure.

A further aspect of the invention provides a method of operating an air breathing reaction propulsion engine according to the first aspect, the method comprising the steps of:

loading the charge-carrying section with a charge of a solid fuel, and

during start-up operation, combusting the solid fuel to produce combustion products that pre-heat the heating coil.

The method may further comprise the step of:

during normal running operation, heating pressurised fluid fuel from the source of pressurised fluid fuel in the coil and expelling the heated fuel at the fuel injector into the cylindrical structure, thereby establishing a pressure differential which draws air into the ejector system to form a combustible fuel/air mixture which is supplied to the combustion chamber.

When the air breathing reaction propulsion engine has a turbopump fuel pump, advantageously the method may comprise the further step of:

starting the turbine of the turbopump by extracting power from combustion products of the solid fuel, e.g. as the combustion products exit the heating coil.

Embodiments of the invention will now be described by way of example with reference to the accompanying drawings in which:

Figure 1 is an overall view of a prior art engine shown in a section along its longitudinal axis;

Figure 2 shows detail of the engine inlet geometry and starting means of the engine of Figure 1;

Figure 3 shows a schematic overview of an air breathing reaction propulsion engine according to a first embodiment of the present invention;

Figure 4 shows a schematic overview of an air breathing reaction propulsion engine according to a second embodiment of the present invention; and

Figure 5 shows (a) an upstream end view and (b) a downstream end view of a fuel injector of the first and second embodiments.

Figure 3 shows a schematic overview of an air breathing reaction propulsion engine 101 according to a first embodiment of the present invention. The engine has numerous features in common with the engine shown in Figures 1 and 2. Thus during normal operation, liquid fuel, usually methanol or nitromethanol, from a fuel tank 130 is pressurised by an electric motor driven pump 131 and supplied to the upstream end of a heating coil 104. Heat transfer from the hot walls of the heating coil causes the fuel to vapourise. The system is sized such that the fuel is fully vapourised before leaving the heating coil. The pressurised fuel vapour is then directed to fuel injector 108 which is centrally located in an air inlet duct 111. The fuel exits the injector at high speed, thereby entraining a flow of ambient air through an annular intake 110 at the upstream end of the inlet duct. The fuel and air mix together in a mixer duct 109 forming a combustable mixture. The mixture then enters a diffuser 112 to increase the static pressure before being dumped into a combustion chamber 115 where it burns. The combustion flame tends to anchor to local geometric features at the upstream end of the combustion chamber. As the hot exhaust products traverse the combustion chamber some heat is transferred by convection to the heating coil 104, balancing that absorbed by the fuel. The heating coil may be lined with e.g. an internal coil/spring, or other heat transfer enhancing device. Finally the exhaust products are accelerated through a nozzle 116 at the downstream end of the combustion chamber thereby imparting a thrust force to the engine structure.

However, relative to the engine shown in Figures 1 and 2, the supplementary gaseous fuel system is removed entirely, including the separate pressurised gaseous fuel tank, fuel supply line and start fuel nozzle. In its place, a length 137 of the primary fuel supply line between a check valve 132 downstream of the pump 131 and the upstream end of a heating coil 104 is at least partially filled with a charge of solid fuel monopropellant. The solid fuel contains both fuel and an oxidiser so no additional air is required for a sustained combustion reaction. The check valve prevents flow of combustions products upstream towards the pump.

For start-up operation, the pump 131 is deactivated and the solid fuel is ignited. The combustion products flow downstream, through the heating coil 104 and out through the fuel injector 108, which has exit nozzles (discussed below) to regulate the flow rate and thereby cause the pressure inside the heating coil to rise. After a short time (typically a fraction of a second) the pressure in the heating coil rises to several times the ambient pressure and the flow through the fuel injector is choked. During this time, heat is transferred to the walls of the heating coil by convection from the combustion products.

At a suitable time, the pump 131 is activated, causing pressurised liquid fuel to flow through the heating coil 104. The timing of this event is typically chosen such that the heating coil has reached some predetermined temperature. In practice, the pump can generally be activated at some predefined time after ignition of the solid fuel charge. Preferably the solid fuel has finished burning by this time, although it is possible that the pump is activated before the solid fuel is completely consumed.

The rate of burning of the solid fuel can be determined by controlling the exposed surface area of the fuel charge. Thus by sculpting the fuel charge into a shape with a high surface area the rate of burning can be increased. The charge may be a solid plug which entirely fills the available cross-section of the length 137 of the fuel line, or it may be an annular charge (as shown in the detailed view of part of the primary fuel supply

line of Figure 3), or it may be another shape. The composition of the fuel charge is chosen such that the combustion products are sufficiently hot to substantially raise the temperature of the heating coil but not to melt the coil. A double-base solid fuel propellant is preferred in which nitroglycerin is dissolved in nitrocellulose. A third base such as nitroguanidine may be added to form a triple-base propellant with a lower flame temperature. Stabilizers and other additives may be added in small amounts to control the chemical stability of the solid fuel. Suitable propellant formulations and charge shapings are known in the field of rocketry.

The heating coil 105 having been raised to a sufficient temperature by heat transfer from the combustion products of the solid fuel, the liquid fuel is vapourised as it moves along the coil. It exits from the fuel injector 108 at high speed, where it mixes with ambient air and is introduced to the combustion chamber 115, whereupon it is ignited using an ignition device such as a glow plug. Normal, stable operation of the engine can then commence.

Thus, advantageously, burning the charge of solid fuel provides the conditions for normal operation of the engine, and removes the need for a complicated, heavy, expensive, supplementary gaseous fuel system.

Figure 4 shows a schematic overview of an air breathing reaction propulsion engine according to a second embodiment of the present invention. Features which are common to both the first and second embodiments have the same reference numbers in Figures 3 and 4.

The second embodiment differs from the first embodiment by employing a turbopump 231 instead of an electric motor driven pump to pressurise the liquid fuel from the fuel tank 130. As in the first embodiment the pump 231 is located between the fuel tank and the check valve 132. However, the pump is driven by a turbine which is located between the exit from the heating coil 104 and the entrance to the fuel injector 108 to

extract energy from the expansion of the vapourised fuel 4. The turbopump can be started electrically using a starter motor or, preferably, it can be started by the action of the solid fuel combustion products expanding through the turbine. The turbopump can also be used to generate power for other onboard systems.

Optionally, the fuel tank 130 can be slightly pressurised above ambient pressure in the engine of the first or second embodiment. Another option, however, which is particularly applicable for short endurance missions, is to employ a highly pressurised fuel tank for the liquid fuel. This can then remove the need for a fuel pump entirely. In place of check valve 132, a valve can be provided which must be specifically activated when the heating coil 104 has reached a sufficient temperature to permit the flow of fuel from the tank to the coil. The fuel tank can be pre-pressurised and allowed to "blow-down" or it can be maintained at a specified pressure e.g. using another fluid.

It is advantageous to have a relatively short mixer duct 109 which nonetheless achieves substantially complete mixing of the fuel and air mix. One way of promoting mixing is for the fuel injector 108 to have a plurality of fuel injection nozzles. This encourages the fuel and air to mix more vigorously over a shorter axial distance as there is a larger exposed interface area between the fuel and the air. Figure 5 shows (a) an upstream end view and (b) a downstream end view of the fuel injector 108 of the first and second embodiments. The injector has an off-centre port 133 at its upstream end which receives the pressurised fuel flow from the heating coil 104. Within the body of the injector there is a manifold which distributes the flow to four fuel delivery nozzles 134 circumferentially spaced around the periphery of the cavity and extending from the downstream end of the injector towards the mixer duct 109.

The fuel injector 108 of Figure 5 also has a central port 135 which feeds a central delivery nozzle 136. These features are optional, and can be deleted, as they were originally intended for the delivery start fuel to the engine.

The fuel injector 108 is located at the centre of the inlet duct 111 so that the intake air flows in an annulus around the injector. The injector has an aerodynamically efficient exterior form, in which the body of the fuel injector has an initial 15° taper increasing to a 20° taper to cause only a small pressure drop in the oncoming air drawn through the intake 110.

While the invention has been described in conjunction with the exemplary embodiments described above, many equivalent modifications and variations will be apparent to those skilled in the art when given this disclosure. Accordingly, the exemplary embodiments of the invention set forth above are considered to be illustrative and not limiting. Various changes to the described embodiments may be made without departing from the spirit and scope of the invention.

All references referred to above are hereby incorporated by reference.

CLAIMS

1 An air breathing reaction propulsion engine (101) having:

an open-ended cylindrical combustion chamber (115) having an upstream end and a downstream end,

an exhaust propulsion nozzle (116) located at the downstream end of the combustion chamber,

an ejector system located at the upstream end of the combustion chamber, the ejector system comprising an open-ended cylindrical structure (111) having an upstream end through which air is drawn into its interior, and a downstream end in open communication with the combustion chamber, and

a fuel supply system comprising a fuel injector (108) located within the ejector system, a source of pressurised fluid fuel, and a fuel heating coil (104) disposed around the wall of the cylindrical combustion chamber through which the pressurised fluid fuel is supplied to the fuel injector, such that, under normal running operation, pressurised fluid fuel is heated in the coil, and the heated fuel is expelled at the fuel injector into the cylindrical structure thereby establishing a pressure differential which draws air into the ejector system to form a combustible fuel/air mixture which is supplied to the combustion chamber;

wherein the fuel supply system further comprises a charge-carrying section (137) adapted to carry a charge of a solid fuel which is combusted during start-up operation to produce combustion products that pre-heat the heating coil.

2 An engine according to claim 1, wherein the charge-carrying section carries the charge of solid fuel.

3 An engine according to claim 1 or 2, wherein the charge-carrying section is a length of fuel line upstream of the fuel heating coil, the solid fuel charge at least partially filling the length of fuel line.

4 An engine according to any one of the previous claims, wherein the charge-carrying section is replaceably dismountable from the fuel supply system, such that the fuel supply system can be provided with replacement charge-carrying sections, re-charged with solid fuel, for subsequent start-up operations.

5 An engine according to any one of the previous claims, wherein the charge-carrying section also directs the fluid fuel to the fuel heating coil during normal running operation.

6 An engine according to claim 5, wherein the fuel supply system further comprises a valve (132) which prevents the combustion products of the solid fuel from travelling upstream towards the source of pressurised fluid fuel during start-up operation during start-up operation.

7 An engine according to any one of the previous claims, wherein the source of pressurised fluid fuel comprises a fuel tank (130) for the fluid fuel upstream of the charge-carrying section.

8 An engine according to any one of claims 7, wherein the fuel tank is pressurised.

9 An engine according to any one of the previous claims, wherein the source of pressurised fluid fuel comprises a fuel pump (131, 231) which is activated at a transition from start-up operation to normal running operation to produce a flow of pressurised fluid fuel through the heating coil.

10 An engine according to claim 9 wherein the fuel pump is a turbopump (231) driven by a turbine which extracts power from vapourised, heated fuel exiting the heating coil.

11 An air breathing reaction propulsion engine (101) having:

an open-ended cylindrical combustion chamber (115) having an upstream end and a downstream end,

an exhaust propulsion nozzle (116) located at the downstream end of the combustion chamber,

an ejector system located at the upstream end of the combustion chamber, the ejector system comprising an open-ended cylindrical structure (111) having an upstream end through which air is drawn into its interior, and a downstream end in open communication with the combustion chamber, and

a fuel supply system comprising a fuel injector (108) located within the ejector system, a source of pressurised fluid fuel, and a fuel heating coil (104) disposed around the wall of the cylindrical combustion chamber through which the pressurised fluid fuel is supplied to the fuel injector, such that, under normal running operation, pressurised fluid fuel is heated in the coil, and the heated fuel is expelled at the fuel injector into the cylindrical structure thereby establishing a pressure differential which draws air into the ejector system to form a combustible fuel/air mixture which is supplied to the combustion chamber;

wherein the source of pressurised fluid fuel comprises a turbopump (231) which is activated at a transition from start-up operation to normal running operation to produce a flow of pressurised fluid fuel through the heating coil, the turbopump being driven by a turbine which extracts power from vapourised, heated fuel exiting the heating coil.

12 An engine according to any one of the previous claims, wherein the fuel injector has a plurality of fuel delivery nozzles (134) through which the pressurised fuel is expelled into the cylindrical structure.

13 A method of operating an air breathing reaction propulsion engine according to any one of claims 1 to 10, or according to claim 12 as dependent on claim 1, the method comprising the steps of:

loading the charge-carrying section with a charge of a solid fuel, and

during start-up operation, combusting the solid fuel to produce combustion products that pre-heat the heating coil.

14 A method according to claim 13, wherein the air breathing reaction propulsion engine is an engine according to claim 10, the method comprising the further step of:

starting the turbine of the turbopump by extracting power from combustion products of the solid fuel.

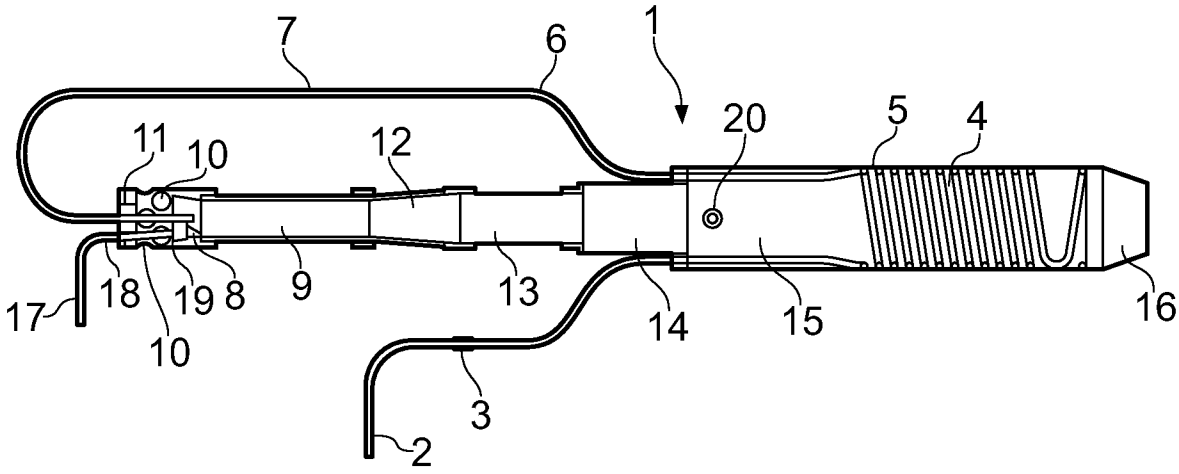

FIG. 1

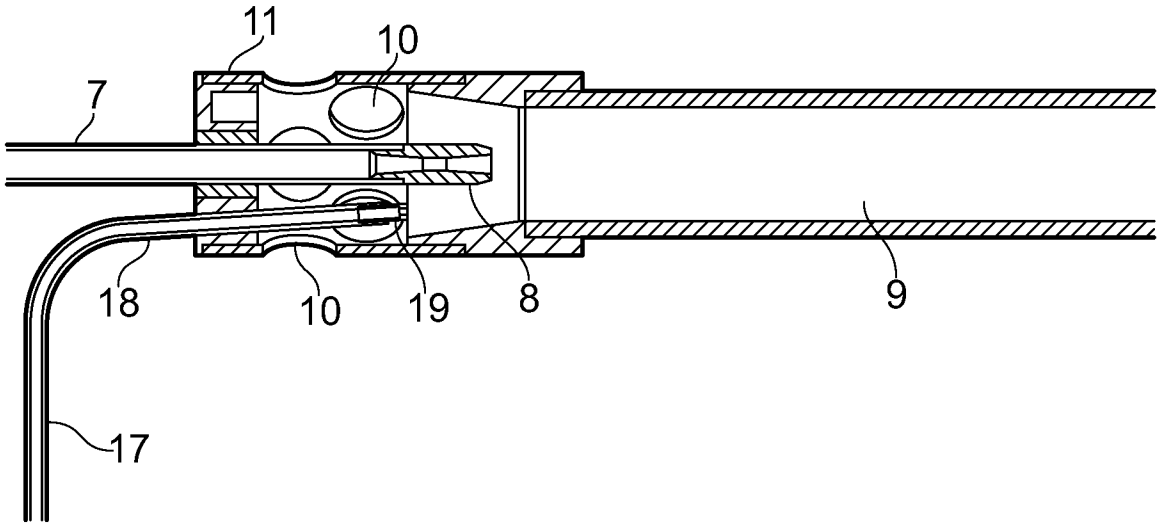

FIG. 2

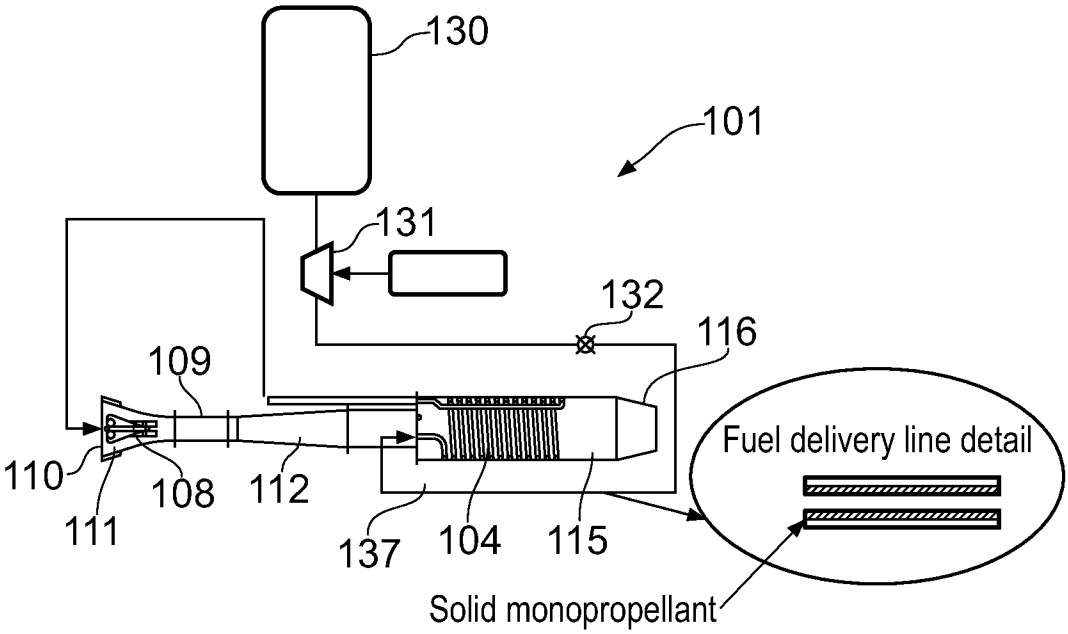
130
101
131
132
116
109
110
108
112
111
137
104
115
Fuel delivery line detail
Solid monopropellant

FIG. 3

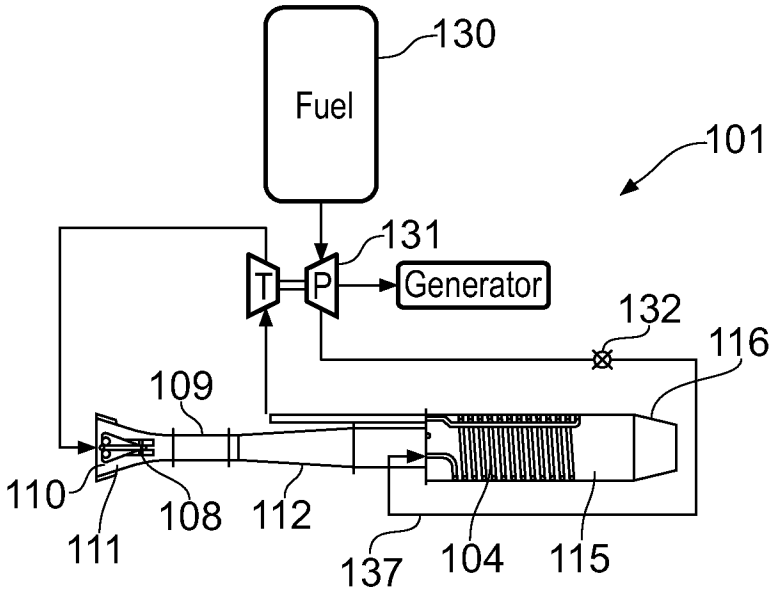
130
Fuel
101
131
T
P
Generator
132
116
109
110
108
112
111
137
104
115

FIG. 4

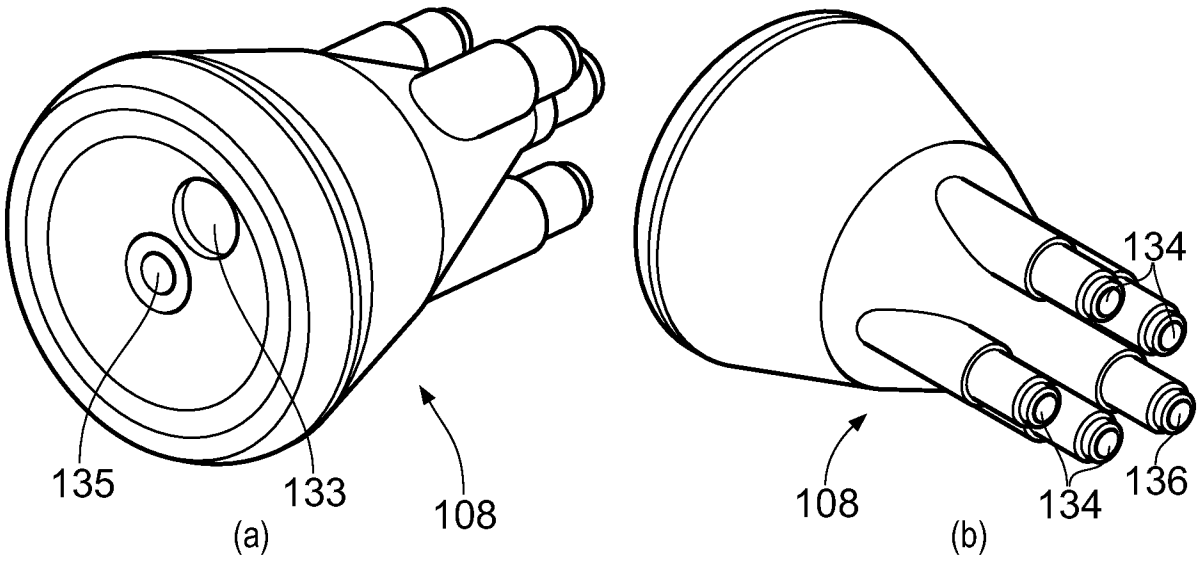

FIG. 5