March 17, 1953 R. MALCOM, JR 2,631,287

FACE PROTECTOR

Filed Sept. 30, 1950 2 SHEETS—SHEET 1

Fig. 1.

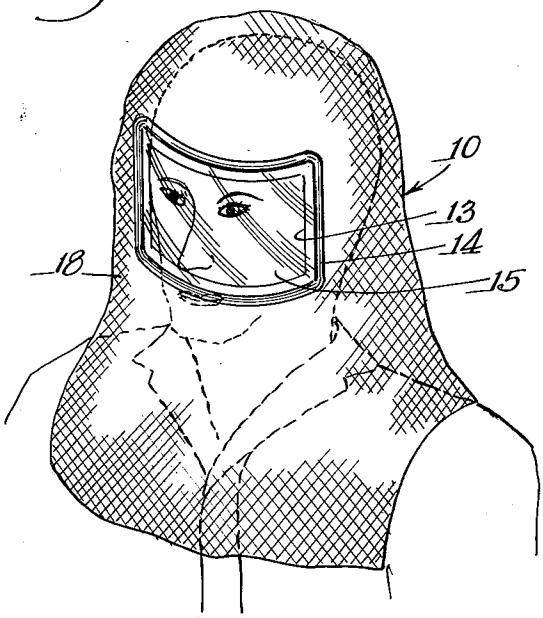

Fig. 2.

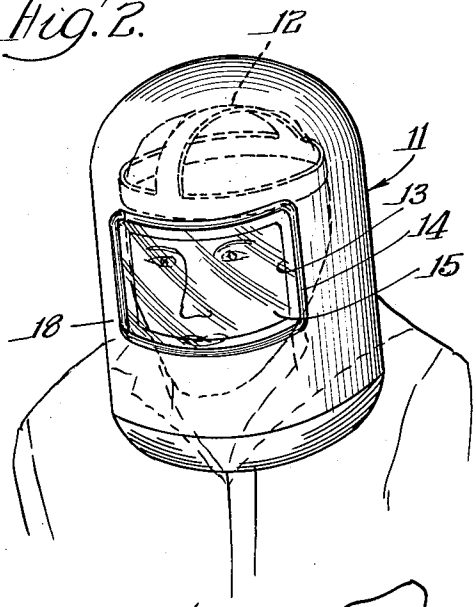

Fig. 3.

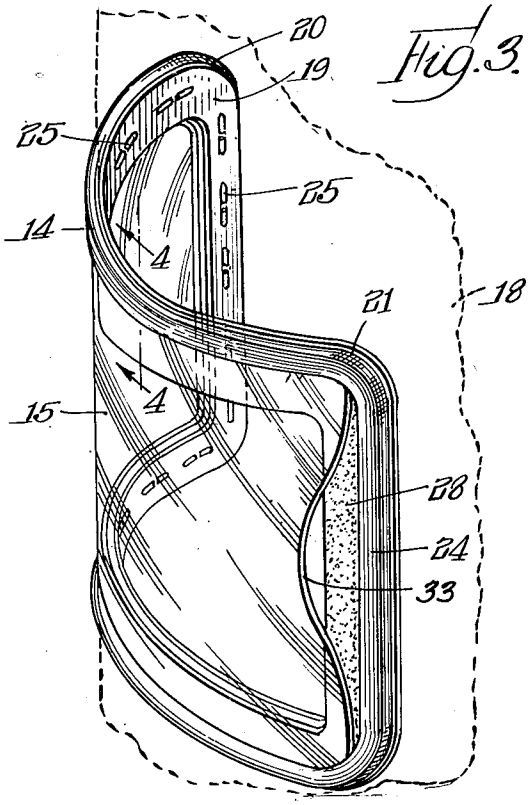

Fig. 4.

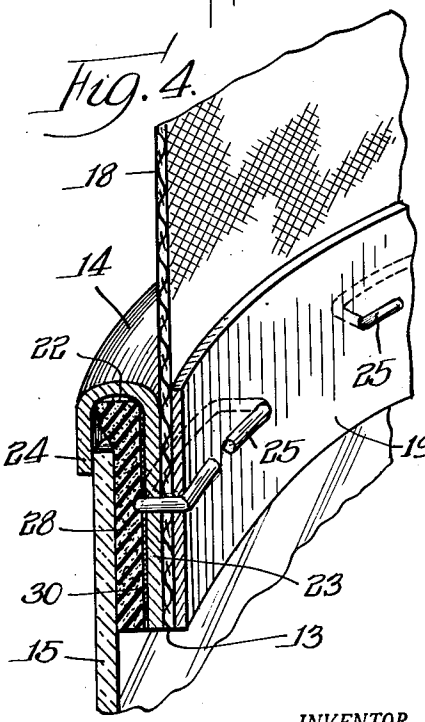

INVENTOR.
Robert Malcom Jr.
BY
Wallenstein & Spanginberg
Attys.

March 17, 1953 R. MALCOM, JR 2,631,287

FACE PROTECTOR

Filed Sept. 30, 1950 2 SHEETS—SHEET 2

Fig. 5.

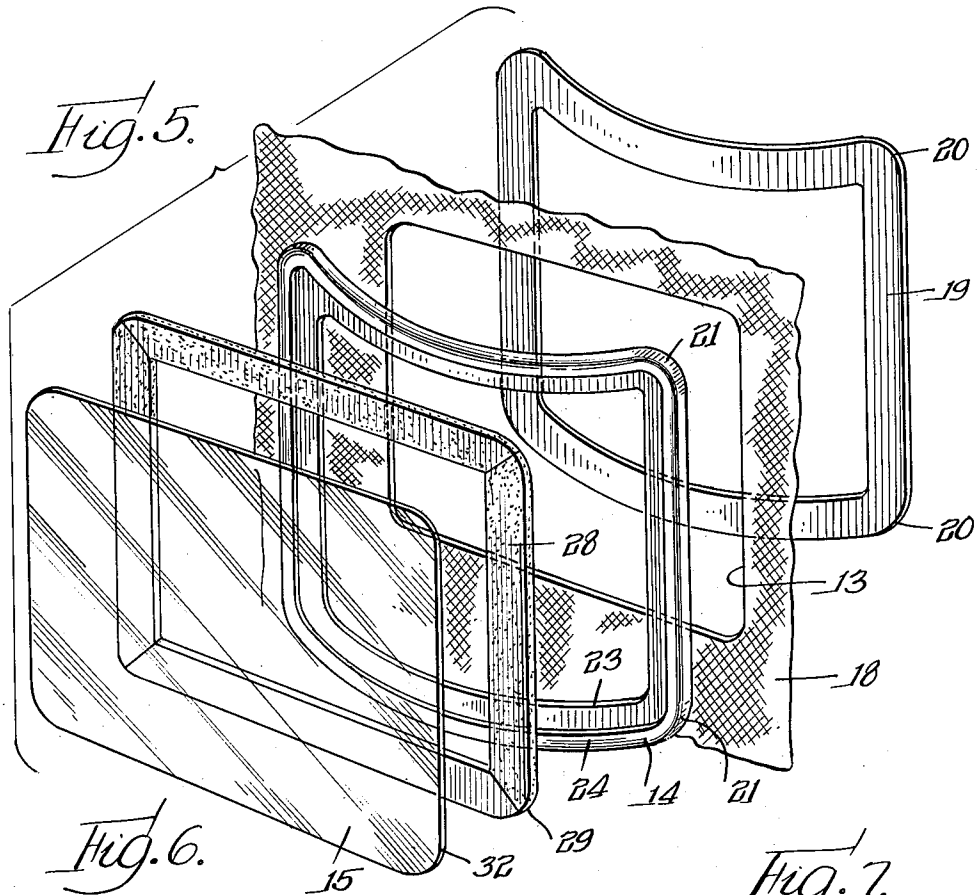

Fig. 6.

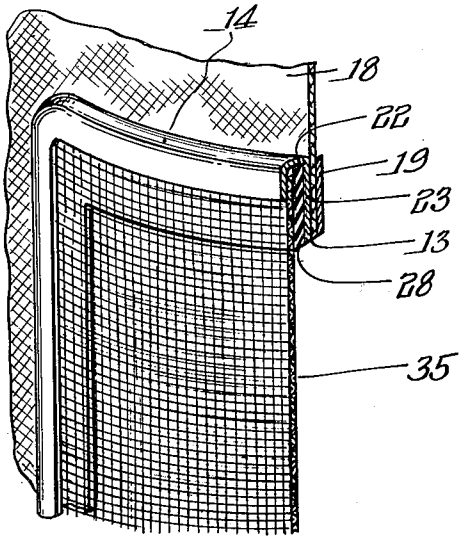

Fig. 7.

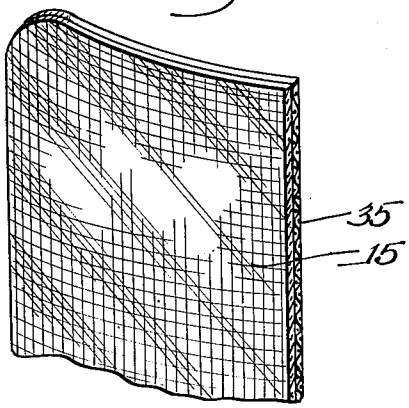

INVENTOR.

Robert Malcom Jr.

BY

Wallenstein & Spangenberg Attys.

Patented Mar. 17, 1953 2,631,287

UNITED STATES PATENT OFFICE

2,631,287

FACE PROTECTOR

Robert Malcom, Jr., Chicago, Ill., assignor to Chicago Eye Shield Company, Chicago, Ill., a corporation of Illinois

Application September 30, 1950, Serial No. 187,771

8 Claims. (Cl. 2—9)

1

This invention is directed to face protectors, such as hoods, shells and the like, and more particularly to protecting shield arrangements for the sight opening thereof.

The principal object of this invention is to provide an improved face protector and protecting shield arrangement for the sight opening thereof wherein the protecting shield may be readily and quickly applied to and removed from the sight opening without the use of tools or fastening devices, wherein a tight seal for the sight opening is provided, wherein the protective shield is firmly held in place, and wherein various types of protecting shields having different thicknesses may be utilized.

In carrying out this object of the invention a channel shaped frame is provided for the sight opening of the face protector and has inwardly facing front and rear channel legs. A gasket of sponge rubber or the like is located in the channel of the frame and it normally substantially fills the channel. A resilient protecting shield is marginally received in the channel of the frame between the sponge rubber gasket and the front channel leg of the frame. The resilient protecting shield is snapped into and out of the channel frame and firmly held in place therein without the necessity of tools or fastening devices. The sponge rubber gasket permits this snapping action, accommodates protecting shields of varying thicknesses, forms a tight seal for the protecting shield, and firmly holds the protecting shield against the front channel leg of the frame. Preferably the sponge rubber gasket is secured to the rear channel leg of the frame by adhesive or the like and preferably the rear channel leg and the sponge rubber gasket are wider than the front channel leg.

In securing the channel shaped frame to the face protector about the sight opening, a rear frame may be utilized and the two frames may be secured together and to the face protector by metal stitching, staples, rivets or the like. The resilient protecting shield may be formed of a transparent plastic such as cellulose acetate or the like or of a mesh screen or of a combination thereof, depending upon the type of face protection desired. Preferably the channel shaped frame and the protecting shield are substantially rectangular with rounded corners to provide desired visibility and ease of assembly.

Further objects of this invention reside in the details of construction of the face protector of this invention and the cooperative relationship between the component parts thereof.

2

Other objects and advantages of this invention will become apparent to those skilled in the art upon reference to the accompanying specification, claims and drawings, in which:

Fig. 1 is a perspective view of the face protector of this invention in the form of a hood;

Fig. 2 is a perspective view of the face protector of this invention in the form of a shell worn in front of the face;

Fig. 3 is an enlarged perspective view illustrating the protecting shield arrangement of this invention with the protecting shield in position to be snapped into the frame.

Fig. 4 is an enlarged sectional view taken substantially along the line 4—4 of Fig. 3;

Fig. 5 is an exploded view illustrating the component parts utilized in this invention;

Fig. 6 is a partial perspective view partly in section illustrating a shield in the form of a mesh screen in lieu of transparent plastic;

Fig. 7 is a partial perspective view partly in section illustrating the use of both the mesh screen and the transparent plastic as the protecting shield.

In Fig. 1 the face protector takes the form of a hood generally designated at 10 placed over the head of the wearer. Fig. 2 illustrates the face protector in the form of a shell 11 suitably carried by a head gear 12 which supports the shell in front of the face of the wearer. In both arrangements the face protector is provided with a sight opening 13 around which is located a front frame 14 which in turn carries the protecting shield 15. Both the hood and shell type face protectors include a protecting member 18. In the hood form, the protecting member 18 may consist of plain canvas or canvas impregnated with rubber or an acid resisting plastic, depending upon the type of service for the hood. Such a hood is suitable for various services, such as lead discing, paint spraying, heat applications, and acid splashing conditions. The protecting member 18 of the shell type face protector is formed from a fabricated fiber such as is used on welding helmets. This type of face protector has particular utility in connection with grinding, chipping and heat applications, and the like.

Referring more particularly to Figs. 3, 4 and 5, the protecting member 18 is provided with a substantially rectangular sight opening 13. A rear frame 19, also of substantially rectangular configuration, encompasses the sight opening 13 on the rear side of the protecting member 18 and this rear frame has its corners rounded as at 20. The front frame 14, which is also of sub-

stantially rectangular configuration, encompasses the sight opening 13 on the front side of the protecting member 18. It also preferably has its corners rounded as at 21. The front frame 14 is channel-shaped in cross section, having a channel 22 formed by a rear leg 23 and front leg 24, the rear leg 23 being preferably wider than the front leg 24. The two frames 14 and 19 are secured together and to the protecting member in any suitable manner as by wire stitching 25, staples, rivets, or the like. Preferably the frames 14 and 19 are formed of aluminum in order to provide lightness and, in cases where an acid condition may be present, the aluminum is preferably anodized.

A gasket 28 of sponge rubber or the like overlies the wider rear leg 23 and is located in the channel 22 of the front frame 14. The corners of the gasket 28 are preferably rounded as at 29 in order to fit within the frame 14. The gasket 28 is preferably secured to the rear leg 23 as by suitable adhesive 30. The sponge rubber gasket 28 substantially completely fills the channel 22.

The protecting shield 15 is resilient in nature and may be made of suitable transparent plastic, such as cellulose acetate or the like. The protecting shield is preferably rectangular in configuration and the corners thereof are rounded at 32 so as to fit within the front frame 14. In applying the resilient protecting shield to the front frame 14, it is first inserted on three sides behind the front leg 24 of the front frame 14 between the front leg and the sponge rubber gasket 28, this being permitted by the resiliency of the protecting shield and by the resiliency of the sponge rubber gasket. The free end 33 of the resilient protecting shield is somewhat bowed, as illustrated in Fig. 3, and may be readily snapped into place behind the front leg 24, this also being permitted by the resiliency of the protecting shield and the sponge rubber gasket. When the protecting shield is thus snapped into place in the front frame 14, a tight seal is afforded between the protecting shield and the sponge rubber gasket and the sponge rubber gasket operates firmly to hold the protecting shield 15 against the front leg 24 of the frame 14. To remove the protecting shield 15, all that is necessary is to release it at one end from behind the front leg 24 and then strip the same from the frame. Thus, the protecting shield 15 may be inserted and removed from the front frame 14 without the use of tools and fastening devices. Since the protecting shield 15 is frictionally held in place in the channel 22 of the front frame, it is permitted to "breathe," that is, expand and contact with temperature changes, aging, and the like, without buckling the same. Such breathing action cannot be afforded in arrangements wherein the protecting shield would be held rigidly in place by conventional fastening devices. By reason of the use of sponge rubber as the gasket material, the channel 22 of the front frame may accommodate protecting shields of varying thickness. Actual use of this invention shows that the thickness of the protecting shield may vary between .080 and .010 inch with satisfactory results.

In lieu of the transparent plastic shield 15, as illustrated in Figs. 3 to 5, the protecting shield may be made of a mesh screen 35 as indicated in Fig. 6. Here, the mesh screen in the form of a wire screen has substantial resiliency and the mode of application of the screen to the front frame 14 is substantially the same as heretofore explained in connection with the transparent plastic shield. The wire screen, by reason of its open mesh, provides vision through the sight opening and yet affords adequate face protection for certain applications, as in grinding and chipping operations.

If desired, both types of resilient protecting shields may be used together, as illustrated in Fig. 7, wherein the wire screen 35 is illustrated as backing the transparent plastic shield 15. By reason of the use of the sponge rubber gasket, both shields 35 and 15 may be accommodated and firmly frictionally secured in the front frame 14.

In order to provide maximum vision and to conform to the shape of the face protector, the frames 14 and 19 are curved as illustrated and, of course, the protecting shields 15 and 35 when inserted in the front frame 14 will follow the same curve.

While for purposes of illustration several forms of this invention have been disclosed, other forms thereof may become apparent to those skilled in the art upon reference to this disclosure and, therefore, this invention is to be limited only by the scope of the appended claims.

I claim as my invention:

1. In a face protector, a protecting member having a sight opening, a rear frame encompassing the sight opening on the rear side of the protecting member, a front frame encompassing the sight opening on the front side of the protecting member, said front frame being channel shaped in cross-section and having integrally formed inwardly facing front and rear channel legs, the rear channel leg being wider than the front channel leg, means for securing together the rear frame, the protecting member and the wide rear channel leg of the front frame, a sponge rubber gasket in the channel of the front frame and coextensively overlying and secured to the wide rear channel leg of the front frame, the sponge rubber gasket normally substantially completely filling the channel between the front and rear channel legs and extending inwardly beyond the inner edge of the narrow front channel leg, and a resilient shield snapped into and marginally received in the channel of the front frame between the sponge rubber gasket and the narrow front channel leg.

2. In a face protector, a protecting member having a sight opening, a rear frame encompassing the sight opening on the rear side of the protecting member, a front frame encompassing the sight opening on the front side of the protecting member, said front frame being channel shaped in cross-section and having integrally formed inwardly facing front and rear channel legs, the rear channel leg being wider than the front channel leg, means for securing together the rear frame, the protecting member and the wide rear channel leg of the front frame, a sponge rubber gasket in the channel of the front frame and coextensively overlying and secured to the wide rear channel leg of the front frame, the sponge rubber gasket normally substantially completely filling the channel between the front and rear channel legs and extending inwardly beyond the inner edge of the narrow front channel leg, and a resilient transparent plastic shield snapped into and marginally received in the channel of the front frame between the sponge rubber gasket and the narrow front channel leg.

3. In a face protector, a protecting member having a sight opening, a rear frame encompassing the sight opening on the rear side of the protecting member, a front frame encompassing the sight opening on the front side of the protecting member, said front frame being channel shaped in cross-section and having inwardly facing front and rear channel legs, the rear channel leg being wider than the front channel leg, means for securing together the rear frame, the protecting member and the wide rear channel leg of the front frame, a sponge rubber gasket in the channel of the front frame and coextensively overlying and secured to the wide rear channel leg of the front frame, the sponge rubber gasket normally substantially completely filling the channel between the front and rear channel legs and extending inwardly beyond the inner edge of the narrow front channel leg, and a resilient mesh screen snapped into and marginally received in the channel of the front frame between the sponge rubber gasket and the narrow front channel leg.

4. In a face protector, a protecting member having a sight opening, a rear frame encompassing the sight opening on the rear side of the protecting member, a front frame encompassing the sight opening on the front side of the protecting member, said front frame being channel shaped in cross-section and having integrally formed inwardly facing front and rear channel legs, the rear channel leg being wider than the front channel leg, means for securing together the rear frame, the protecting member and the wide rear channel leg of the front frame, a sponge rubber gasket in the channel of the front frame and coextensively overlying and secured to the wide rear channel leg of the front frame, the sponge rubber gasket normally substantially completely filling the channel between the front and rear channel legs and extending inwardly beyond the inner edge of the narrow front channel leg, and a superimposed resilient transparent plastic shield and resilient mesh screen snapped into and marginally received in the channel of the front frame between the sponge rubber gasket and the narrow front channel leg.

5. A protecting shield arrangement for the sight opening of a face protector comprising, a channel shaped frame for the sight opening and having integrally formed inwardly facing front and rear channel legs, the rear channel leg being wider than the front channel leg, a sponge rubber gasket in the channel of the frame and coextensively overlying and secured to the wide rear channel leg of the frame, the sponge rubber gasket normally substantially completely filling the channel between the front and rear channel legs and extending inwardly beyond the inner edge of the narrow front channel leg, and a resilient shield snapped into and marginally received in the channel of the frame between the sponge rubber gasket and the narrow front channel leg, the resilient shield compressing the sponge rubber gasket to form a tight seal therebetween and firmly to hold the resilient shield against the narrow front channel leg.

6. A protecting shield arrangement for the sight opening of a face protector comprising, a channel shaped frame for the sight opening and

having integrally formed inwardly facing channel legs, the rear channel leg being wider than the front channel leg, a sponge rubber gasket in the channel of the frame and coextensively overlying and secured to the wide rear channel leg of the frame, the sponge rubber gasket normally substantially completely filling the channel between the front and rear channel legs and extending inwardly beyond the inner edge of the narrow front channel leg, and a resilient shield snapped into and marginally received in the channel of the frame between the sponge rubber gasket and the narrow front channel leg, the resilient shield compressing the sponge rubber gasket to form a tight seal therebetween and firmly to hold the resilient shield against the narrow channel leg of the frame.

7. A protecting shield arrangement for a substantially rectangular sight opening of a face protector comprising, a substantially rectangular channel shaped frame for the sight opening having integrally formed inwardly facing channel legs and rounded corners, the rear channel leg being wider than the front channel leg, a sponge rubber gasket in the channel of the frame and coextensively overlying and secured to the wide rear channel leg of the frame, the sponge rubber gasket normally substantially completely filling the channel between the front and rear channel legs and extending inwardly beyond the inner edge of the narrow front channel leg, and a substantially rectangular resilient shield having rounded corners snapped into and marginally received in the channel of the frame between the sponge rubber gasket and the narrow front channel leg, the resilient shield compressing the sponge rubber gasket to form a tight seal therebetween and firmly to hold the resilient shield against the narrow channel leg of the frame.

8. A protecting shield for use in a sight opening of a face protector having a substantially rectangular channel shaped frame with rounded corners for the sight opening including integrally formed inwardly facing channel legs, the rear channel leg being wider than the front channel leg, and a sponge rubber gasket in the channel of the frame and coextensively overlying and secured to the wide rear channel leg of the frame, comprising a substantially rectangular resilient transparent plastic shield having rounded corners to be snapped into and marginally received in the channel of the frame between the sponge rubber gasket and the narrow front channel leg and compressing the sponge rubber gasket to form a tight seal therebetween and firmly to be held against the narrow front channel leg.

ROBERT MALCOM, JR.

REFERENCES CITED

The following references are of record in the file of this patent:

UNITED STATES PATENTS

Number	Name	Date
1,289,482	Lamb	Dec. 31, 1918
1,645,355	Sherts	Oct. 11, 1927

FOREIGN PATENTS

Number	Country	Date
545,642	Great Britain	June 5, 1942