J. CLARK.

Improvement in Octave-Couplers for Pianos, &c.

No. 129,530. Patented July 16, 1872.

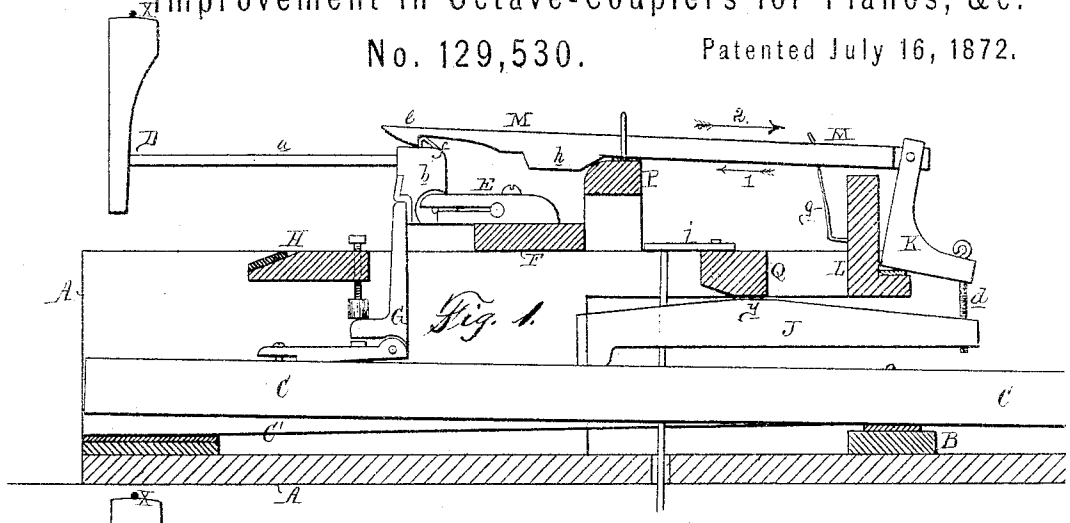

FIG. 2.

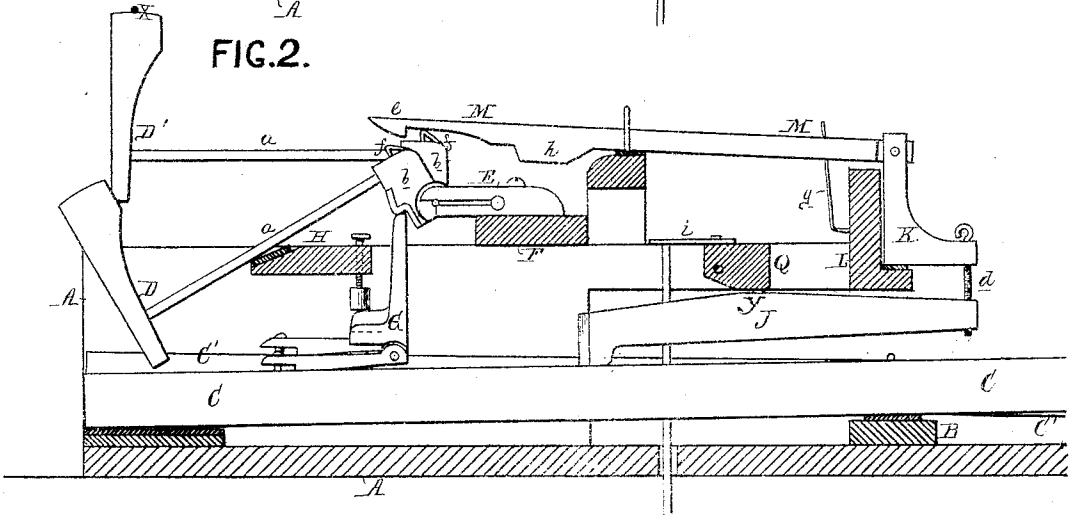

FIG. 3.

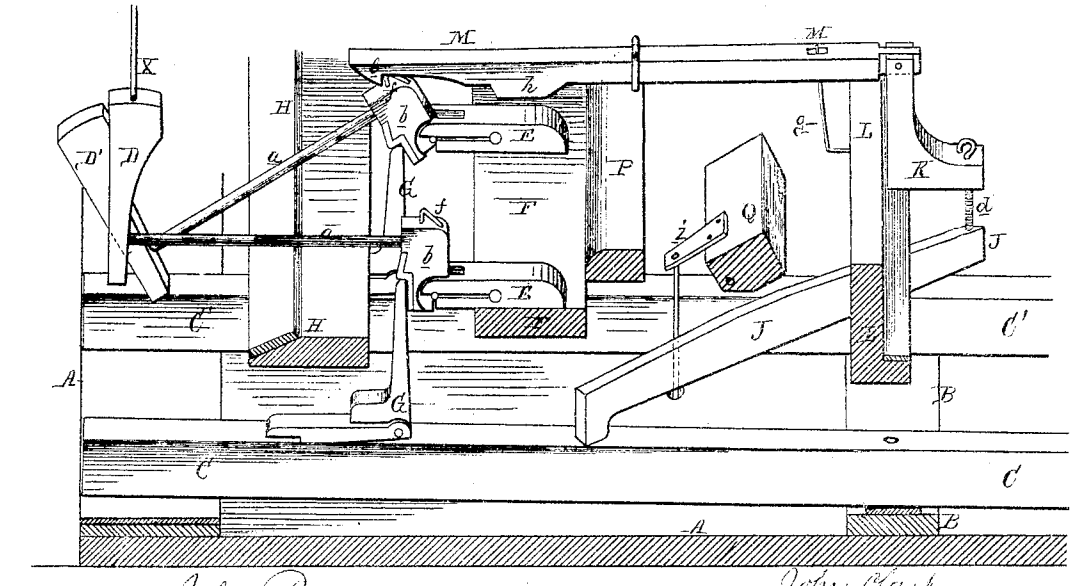

WITNESSES, John Parker
Thos. McIlvain

John Clark
By his atty.
Howson & Son

AM. PHOTO-LITHOGRAPHIC CO. N.Y. (OSBORNE'S PROCESS)

UNITED STATES PATENT OFFICE.

JOHN CLARK, OF PHILADELPHIA, PENNSYLVANIA, ASSIGNOR TO HIMSELF, AUGUSTUS L. WILLIS, AND RICHARD A. SCHWAB, OF SAME PLACE.

IMPROVEMENT IN OCTAVE-COUPLERS FOR PIANOS, &c.

Specification forming part of Letters Patent No. 129,530, dated July 16, 1872.

Specification describing an Improved Octave-Coupler for Pianos, &c., invented by JOHN CLARK, of Philadelphia, Pennsylvania.

Octave-Coupler for Pianos.

My invention consists of an octave-coupler for pianos, too fully explained hereafter to need preliminary description, and designed with the view of enabling any air or part of a musical composition to be played in octaves with as much ease, rapidity, and accuracy as if played in single notes.

In the accompanying drawing, Figure 1 is a sectional view of part of a piano with my improved octave-coupler; Fig. 2, the same, with the parts in a different position; and Fig. 3, a sectional perspective view.

A represents part of the frame of a piano; C, one of the keys, and C′ the corresponding key of the next octave above, both being hung to the pivot-rail B, as usual. D and D′ are two hammers arranged directly over the rear ends of the keys C and C′, and each having the usual shank *a* and butt *b*, the latter being hung to a cap-sill, E, secured to the cap-sill rail F. Each hammer is operated by its key through the medium of a jack, G, secured to the latter in such a manner that when the front end of the said key is depressed the hammer shall be suddenly elevated and strike the wire X, and be then released, falling until its shank *a* rests upon the rail H. My invention, which I will now proceed to describe, consists of an octave-coupling attachment to be applied to the above-mentioned parts of an ordinary piano. One end of a lever, J, rests upon the top of the key C, at a point at the rear of the pivot-rail B, and the opposite end of the said lever, which extends diagonally across the piano toward the front of the same, and toward the corresponding key C′ of the next octave, is connected at a point directly over the latter to a bell-crank lever or jack, K, hung to a fixed rail, L, the connection being made by a set-screw, *d*, so as to enable the said lever to be adjusted toward or from the jack. The upper or vertical arm of the jack is pivoted to a sliding bar, M, which rests upon and is guided by a fixed rail, P, and extends rearward over the key C′ and over the butt *b* of its hammer D′, the rear end of the said bar being formed with a hook, *e*, adapted to a corresponding hook or notch, *f*, on the top of the hammer-butt. The said sliding bar is also acted upon by a light spring, *g*, which tends to draw it in the direction of the arrow 1, Fig. 1, and it has on its under side a cam-like projection, *h*, which, when drawn over the inclined rear edge of the rail P, elevates the said bar and disengages its hooked end from the notch *f* of the hammer-butt. The above arrangement is duplicated for each of the keys of the piano, or for so many of them successively as may be desired, each key having a separate lever, J, jack K, and sliding bar M for coupling it to the hammer of the corresponding key of the next octave above, if in the treble, or to the hammer of the corresponding key of the next octave below, if in the bass. A bar, Q, extends transversely across the top of the whole of the levers J, and is pivoted at its opposite ends to the frame of the piano, the said bar having an arm, *i*, connected with a pedal or knee-stop, by means of which it may be turned downward, as shown in Figs. 1 and 2, so as to form the fulcrum of the levers, and thus throw the whole of the couplers into action, or be elevated, as shown in Fig. 3, so as to shift the fulcrums of the levers to the connecting-screws *d*, and thus throw the said couplers out of action. For instance, if when the bar Q is lowered the key C be struck, its hammer D will be elevated and released, as usual, by the jack G, and at the same time its lever J, whose fulcrum is now at the point *y*, Fig. 1, will be turned in such a manner as to operate the jack K and draw the sliding bar M in the direction of the arrow 2. This will have the effect of elevating the hammer D′, and causing it to strike the wire simultaneously with the hammer D, although the key C′ of the said hammer D′ remains stationary and undisturbed. The hammer D′ will also be released simultaneously with the hammer D, owing to the lifting of the bar M in passing over the rail P, as before described. After thus sounding an octave by means of the single key C, and on releasing the latter, the sliding bar M and parts connected therewith will be restored to their original positions, owing to the action of the spring *g*. As the key C′ forms no part of the coupler for the key C, but remains elevated when the latter is depressed,

it can be struck immediately afterward or simultaneously with the lower key, so as to sound its octave also. In this way the effect of three notes can be obtained by striking two keys. The whole action can be instantly thrown off by elevating the bar Q, as seen in Fig. 3, the levers J in this case being simply turned upon the connections *d* without operating the sliding bars M, so that each key will elevate its own hammer only. The bar Q is to be acted upon by a spring, which will retain it in the elevated position seen in Fig. 3, so that the couplers shall only be in operation when the said bar is depressed by means of the pedal or knee-stop.

A principal advantage possessed by my invention is that no additional skill is required to operate it, as the whole action is thrown on or off at will by the simple operation of a pedal or knee-stop.

I claim as my invention—

1. The combination of the keys C C′, the adjustable bar Q, and coupling-levers J, each bearing at one end on one of the keys, and operating the hammer of the octave-key through the medium of the bar M and jack K, or their equivalents, substantially as described.

2. The bar M sliding longitudinally and hooked at the end, in combination with a hammer-butt, *b*, having a hook or notch, as described.

3. The combination of the cam-like projection *h* of the bar M with the edge of the guiding and supporting rail P, all substantially as and for the purpose specified.

4. The combination, with a piano-key and with the hammer of the corresponding key of the next octave, of a coupling device consisting of a lever, J, jack K, and sliding bar M, the whole being arranged and operating substantially in the manner described.

5. The combination, with a hammer-butt, of a jack, G, sliding bar M, and coupling devices described, or their equivalents, whereby the said butt and its hammer can be operated either by the key immediately below or by the corresponding key of the next octave, all substantially as specified.

In testimony whereof I have signed my name to this specification in the presence of two subscribing witnesses.

JOHN CLARK.

Witnesses:
WM. A. STEEL,
HARRY SMITH.