March 13, 1934. H. EWEST ET AL 1,951,137

GASEOUS ELECTRIC DISCHARGE DEVICE

Filed Oct. 21, 1931

Fig. 1

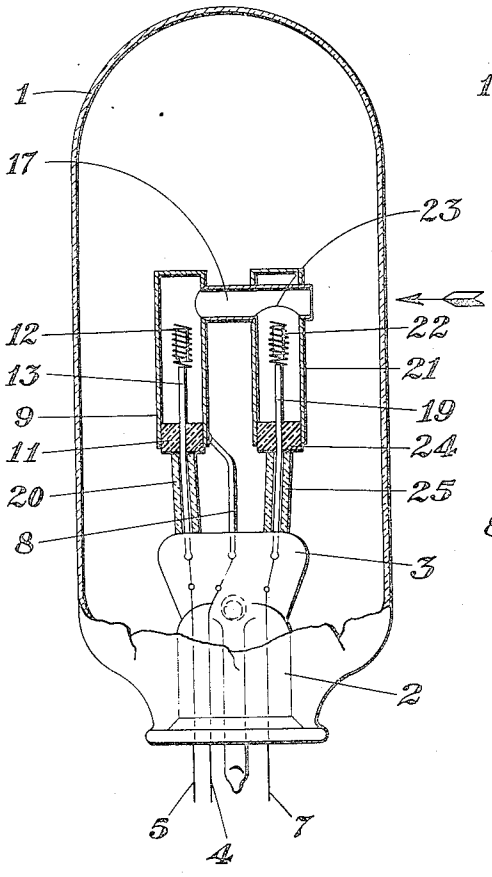

Fig. 2

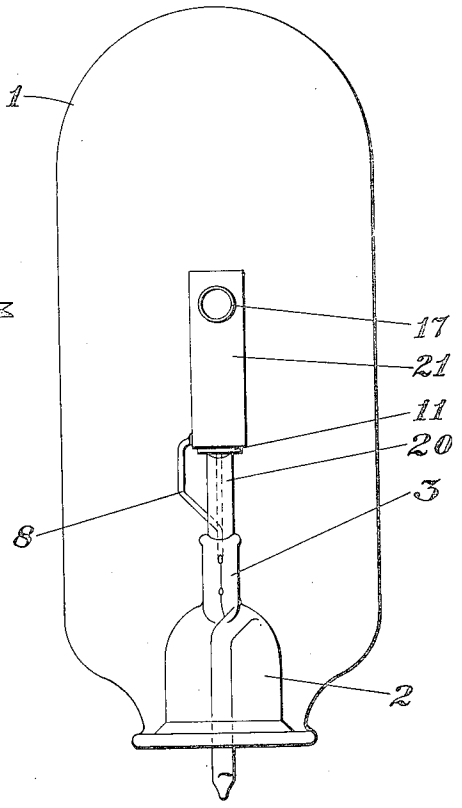

INVENTORS
Hans Ewest
Georg Gaidies
BY Charles E. Fuller
ATTORNEY

Patented Mar. 13, 1934 1,951,137

UNITED STATES PATENT OFFICE

1,951,137

GASEOUS ELECTRIC DISCHARGE DEVICE

Hans Ewest, Berlin, and Georg Gaidies, Berlin-Pankow, Germany, assignors to General Electric Company, a corporation of New York

Application October 21, 1931, Serial No. 570,218
In Germany November 5, 1930

3 Claims. (Cl. 176—122)

The present invention relates to gaseous electric discharge devices generally and more particularly the invention relates to such devices of the positive column arc or positive column glow discharge type similar to those disclosed in our copending application Serial Number 485,059, filed September 29, 1930.

In the device disclosed in the application referred to the luminous gas column is viewed end on through a tube of narrow diameter protruding from the walls of a metal chamber in the container of the device, an incandescent cathode being arranged in said chamber out of the line of vision through said tube and the anode is arranged outside of said chamber and adjacent the external mouth of said tube. Such a device is useful in the arts generally and particularly in television and spectrometry making available a concentrated, intense light source. Due to the location of the anode outside the chamber the device is restricted to operation on direct current.

The object of the present invention is to provide a gaseous electric discharge device of the above type which will operate on alternating current and which may also be operated on direct current if desired. Still further objects and advantages attaching to the device and to its use and operation will be apparent to those skilled in the art from the following particular description and from the appended claims.

In accordance with this object the invention comprises a tube connecting two chambers, each of said chambers containing an incandescent electrode, said electrodes being located out of the line of vision through said tube so that the luminous gas column visible through the open end of the tube is not mixed with the light emitted by the incandescent electrodes. The device is started into operation by connecting either one or both of the electrode chambers to the current lead of one of the electrodes.

In the drawing accompanying and forming part of this specification an embodiment of the invention is shown in which

Fig. 1 is a side elevational partly sectional view of the new and novel gaseous electric discharge device and

Fig. 2 is a front elevational view of said device.

Like numbers denote like parts in both views of the device.

Referring to the drawing the gaseous electric discharge device comprises a glass container 1 which is similar in size to the well known incandescent lamp bulb of common household size though it may have any size desired. Said container 1 has a stem 2 and current leads 4, 5 and 7 are sealed into pinch part 3 of said stem 2. Above the pinch part 3 is a tube shaped metal chamber 9 in the interior of which is an incandescent or hot electrode 12. Said electrode 12 is connected to the current lead wire 5 by support wire 13, said wire 13 is led through insulation plug 11 of the metal chamber 9 and sealed into pinch part 3. That part of lead 13 between plug 11 and pinch part 3 is surrounded by insulation tube 20. Said incandescent electrode 12 consists of a wire coil surrounding and supporting a bar or stick of electron emissive material such as, for example, a sintered mixture of barium metal and oxide and tungsten. A tube part 17 of small diameter extends from the side of said metal chamber 9 and is located above said electrode 12. Said tube 17 extends through and beyond a second metal chamber 21. A second incandescent or hot electrode 22 of the same structure and materials as said electrode 12 is located in said chamber 21 and below the opening 23 in the wall of said tube 17. Said electrode 22 is connected to lead 7 by support wire 19 sealed into pinch part 3. The interior of metal chamber 21 is connected with the interior of the metal chamber 9 by tube 17. The metal chamber 21 which is parallel to the metal chamber 9 has an insulation plug 24 in the lower part thereof, the support wire 19 of said electrode 22 between said plug 24 and the pinch part 3 is surrounded by insulation shell 25. Said metal shell 9 is connected by support wire 8 thereof to the third current lead 4.

In starting the device into operation the line voltage of the source is applied to electrode 12 through lead 5 and to the chamber 9 through lead 4 connected to lead 7. An electric discharge is thus established between the inner walls of chamber 9 and the electrode 12. As the distance between the walls of the metal chamber 9 and the electrode 12 is very small this discharge takes place without preheating of the electrode 12. This starting discharge between said metal chamber 9 and said electrode 12 quickly heats the latter to an electron emitting temperature. As soon as the gas in said metal chamber 9 and said metal chamber 21 is sufficiently ionized, which takes place in this case in the course of a few seconds, a strong arc discharge takes place between the electrodes 12 and 22 which heats said electrodes 12 and 22 to an incandescent temperature, so that during the

operation of the lamp a sufficient electron emission from both electrodes is assured. The connection between the two current leads 4 and 7 can be broken or not, as desired, after the discharge between electrodes 12 and 22 has been established.

The gaseous discharge passing through part of the tube 17 is visible in the direction of the arrow of Fig. 1 and due to its concentration in said tube 17 and the high current density it is possible to use in connection with electron emitting electrodes 12 and 22, said gaseous discharge is a brilliant and intense light source being particularly useful for television purposes.

While we have shown and described and have pointed out in the annexed claims certain novel features of the invention, it will be understood that various omissions, substitutions and changes in the forms and details of the device illustrated and in its use and operation may be made by those skilled in the art without departing from the broad spirit and scope of the invention; for example the metal chambers 9 and 21 may be of different shape and supported by any suitable means, the distance between them may be greater or less as desired, any suitable type of electrode may be used depending on whether alternating or direct current is used to operate the device.

What we claim as new and desire to secure by Letters Patent of the United States is:

1. An electric discharge device comprising a container, electrodes sealed therein, a gaseous atmosphere therein, two or more chambers in said container, one of said electrodes being mounted in each of said chambers, a tube connecting the interior of said chambers and at right angles to said chambers, said tube and said chambers being of opaque material, one of said chambers having an orifice in the wall thereof concentric with the axis of said tube.

2. An electric discharge device comprising a container, thermionic electrodes sealed therein, a gaseous atmosphere therein, two or more chambers in said container, one of said electrodes being mounted in each of said chambers, a tube connecting the interior of said chambers and at right angles to said chambers, said tube and said chambers being of opaque material, one of said chambers having an orifice in the wall thereof concentric with the axis of said tube.

3. An electric discharge device comprising a container, electrodes sealed therein, a gaseous atmosphere therein, two or more chambers in said container, one of said electrodes being mounted in each of said chambers, a tube connecting the interior of said chambers and at right angles to said chambers, said tube and said chambers being of opaque material, said tube being out of line with said electrodes, one of said chambers having an orifice in the wall thereof concentric with the axis of said tube.

HANS EWEST.
GEORG GAIDIES.