Feb. 20, 1940. E. F. KINZLER 2,190,947

STRIPPING, INSERTING, AND DRAWING TABLE

Filed Nov. 22, 1938 3 Sheets-Sheet 1

Fig. 1.

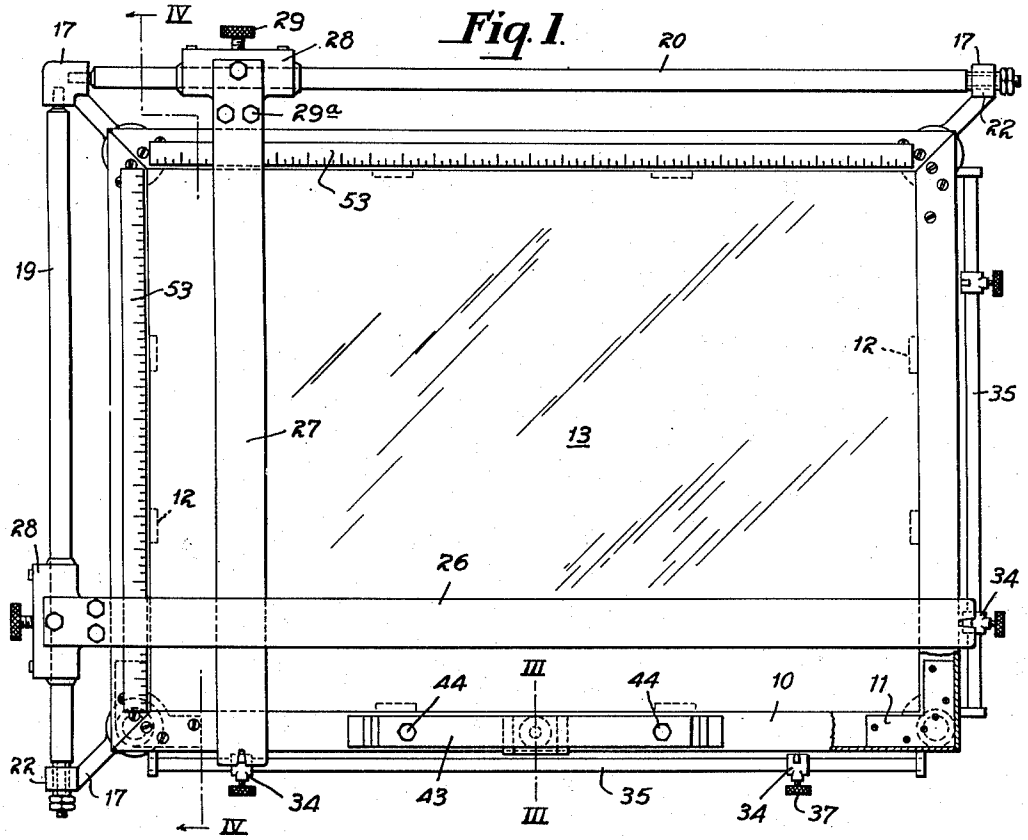

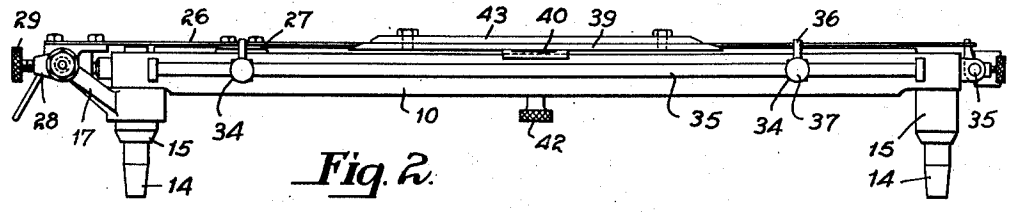

Fig. 2.

Fig. 3.

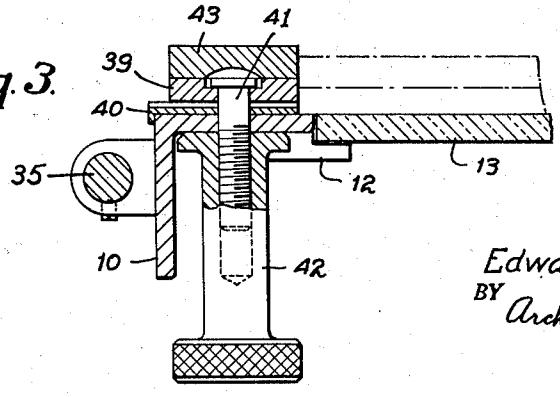

INVENTOR.
Edward F. Kinzler
BY Archworth Martin
ATTORNEY

Feb. 20, 1940. E. F. KINZLER 2,190,947

STRIPPING, INSERTING, AND DRAWING TABLE

Filed Nov. 22, 1938 3 Sheets-Sheet 2

Fig. 4.

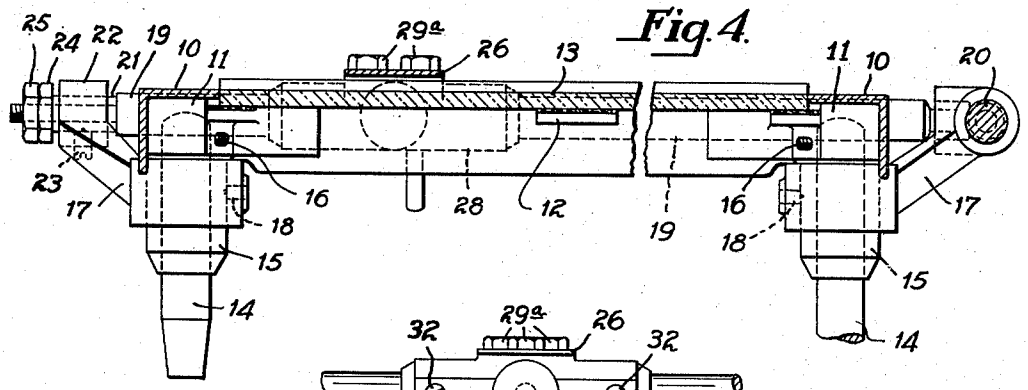

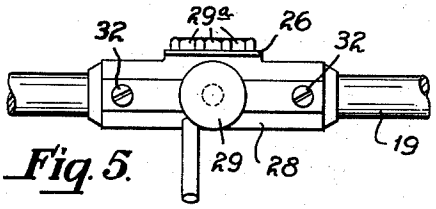

Fig. 5.

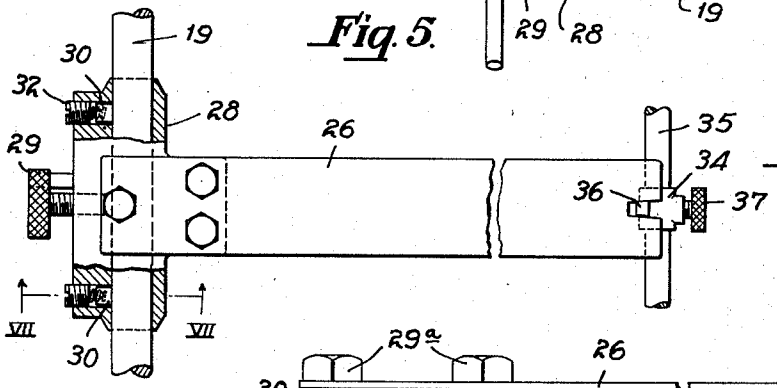

Fig. 6.

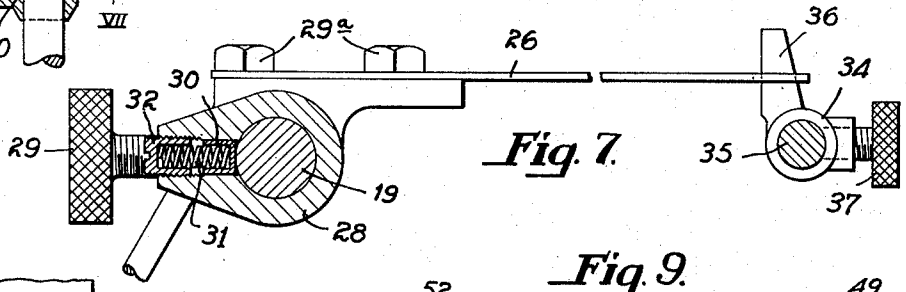

Fig. 7.

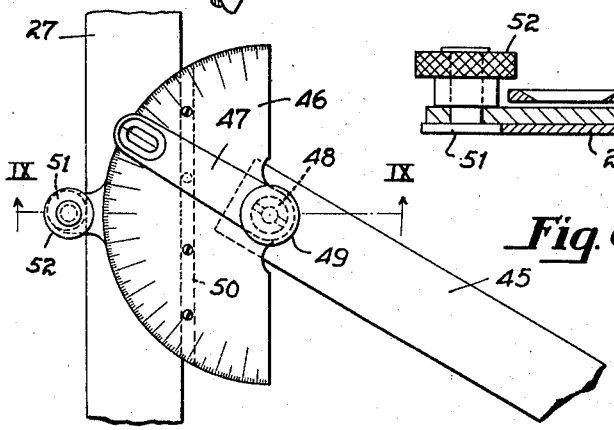

Fig. 8.

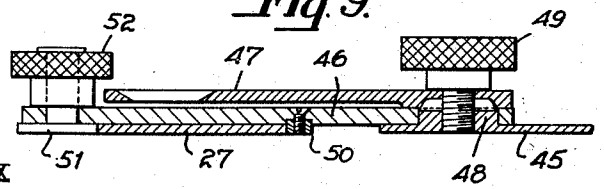

Fig. 9.

INVENTOR.
Edward F. Kinzler
BY Archworth Martin
ATTORNEY

Feb. 20, 1940. E. F. KINZLER 2,190,947

STRIPPING, INSERTING, AND DRAWING TABLE

Filed Nov. 22, 1938 3 Sheets-Sheet 3

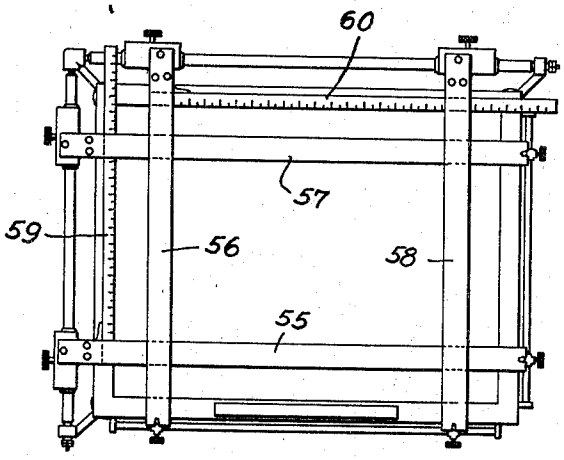

Fig. 10.

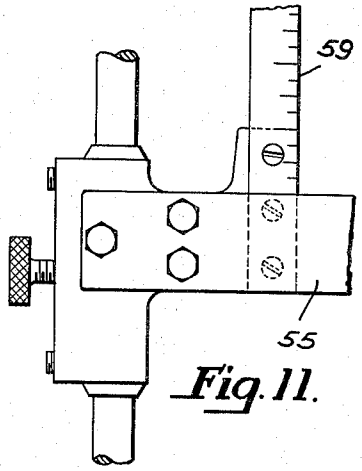

Fig. 11.

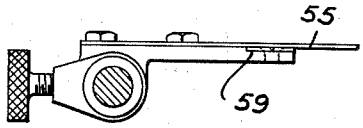

Fig. 12.

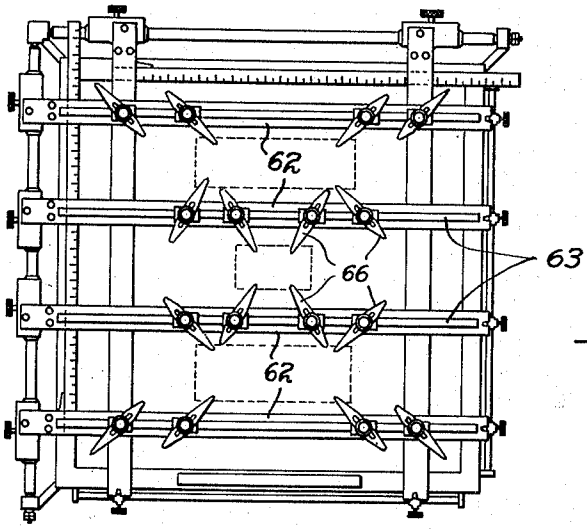

Fig. 13.

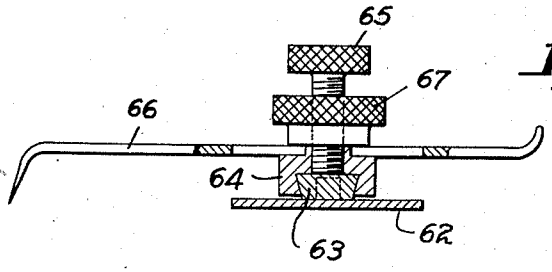

Fig. 14.

INVENTOR.
Edward F. Kinzler
BY Archworth Martin
ATTORNEY.

Patented Feb. 20, 1940

2,190,947

UNITED STATES PATENT OFFICE

2,190,947

STRIPPING, INSERTING, AND DRAWING TABLE

Edward F. Kinzler, Pittsburgh, Pa.

Application November 22, 1938, Serial No. 241,825

5 Claims. (Cl. 33—184.5)

My invention relates to convertible stripping, inserting and drawing tables such as are employed in the commercial photography and graphic arts, and has for one of its objects the provision of means whereby photographic negatives and the like can accurately and conveniently be positioned or aligned preliminary to the making of half-tones, zinc etchings, etc.

Another object of my invention is to provide a structure of the character referred to, which is useful as a layout table, cutting table, or a drawing board for artists or draftsmen.

Some of the forms which my invention may take are shown in the accompanying drawings wherein Figure 1 is a plan view of one form of table; Fig. 2 is an elevational view thereof; Fig. 3 is an enlarged view taken on the line III—III of Fig. 1; Fig. 4 is an enlarged view taken on the line IV—IV of Fig. 1; Fig. 5 is an end view of one of the T-square elements of Fig. 1; Fig. 6 is a plan view thereof; Fig. 7 is a view taken on the line VII—VII of Fig. 6; Fig. 8 is a plan view of a protractor for use with the table; Fig. 9 is an enlarged view taken on the line IX—IX of Fig. 8; Fig. 10 is a view showing a modification of the structure of Fig. 1; Fig. 11 is an enlarged plan view of a portion of the structure of Fig. 10; Fig. 12 is an end view thereof; Fig. 13 is a plan view showing still another modification, and Fig. 14 is an enlarged sectional view of one of the aligning fingers and its mounting of Fig. 13.

Referring first to Figs. 1 and 2, the table comprises a rectangular frame that is composed of angle bars 10 connected at the corners of the frame by corner blocks 11. The lugs 12 are secured to the undersides of the angles 10 and serve to support a glass plate or board 13 upon which the film negatives or drawing paper may be placed. The table is provided with legs 14 that are connected to the underside of the framework by inserting them through hubs 15 that are carried by the corner brackets 11, the legs being held in the hubs by set screws 16, as shown more clearly in Fig. 4. Three of the hubs carry brackets 17 whose sleeve-like portions surround the hubs and are held in place thereon by set screws 18. Guide rods 19 and 20 are carried by the brackets 17, the reduced ends of the rods 19 and 20 being journalled in the brackets, for oscillatory movement. One reduced end of each rod extends through a bushing 21, which bushing is rigidly held in the bearing portion 22 of its associated bracket. Beyond the bushing 21 the rods are threaded for the reception of draw-up nuts 24 and lock nuts 25. The nuts 24 are drawn up sufficiently to draw the shoulder portions of the rods against the inner ends of the bushings, to prevent end play or axial movement of the rods, while still permitting them to rotate in the bushings.

Slidably mounted on the rods 19 and 20 are T-squares 26 and 27 respectively. Each T-square comprises a straight-edge element and a head portion 28, which is of generally tubular form and has the straight-edge connected thereto by screws 29a. Each head 28 is provided with a locking or set screw 29 which has engagement with the associated guide rod to hold the T-square in set positions. The body portions of the heads 28 have bores for the reception of recessed presser blocks 30 that bear against the guide rod and whose inner ends are curved to the contour of the rod (Fig. 7). Coil springs 31 seat within the presser blocks, and studs 32 are threaded into the bores and hold the springs against the presser blocks with a desired degree of tension. As shown in Fig. 1, the T-square 26 overlies the T-square 27, it being understood that the head 28 which carries the member 26 is of such thickness or height as to support the member 26 in a slightly higher plane than the member 27. Furthermore, since the T-squares are shown as of very thin material, they will flex sufficiently to permit one to overlie the other, even though their base ends are disposed in a common plane.

The presser blocks with their tension springs are of particular utility because, since the heads 28 necessarily have some clearance with their respective guide rods, there is some play or looseness which tends to prevent very accurate positioning and alignment of the straight-edges. Even minute fractions of an inch variation are very undesirable, especially in connection with color photography where several plates are required for printing a picture, and if each negative is not accurately aligned on the table preliminary to reproducing it for printing purposes, the colors will not be matched properly in the printed picture. In order to prevent such looseness, the springs 31 are maintained under sufficient tension, by adjustment of the screws 32, to prevent play of the heads 28 on their guide rods, but still to permit convenient rocking and sliding of the straight-edges. In other words, the presser shoes and their springs maintain the wall of the heads at the opposite side in close contact with the guide rod, during alignment of the T-squares with the negatives or other material being set up. When the straight-edges have been moved to a desired position, the set screws 29 will be turned to clamp

the heads in place. By reason of the fact that the guide rods are journalled for oscillatory or rocking movement, the straight-edges after being positioned, can be swung back and forth to permit placing and removal of films or the like upon the plate or board, without disturbing the adjustments of the straight-edges.

Locking dogs **34** are provided for the free ends of the straight-edges, such locking dogs being slidably and pivotally mounted on rods **35** that are secured to the framework of the table, and the wing-like extensions **36** thereof are movable into notches formed in the ends of the straight-edges, the sides of the members **36** of the notches being tapered or of V-form. Set screws **37** are provided for clamping the dog **34** in position. The locking dogs serve to prevent deflection of the free ends of the straight-edges when working with material upon the board.

In some instances, advertisements or the like have portions of the matter appearing on angular lines relative to other portions thereof, and it may be desired to position the negatives somewhat diagonally on the board, and to insert printed matter in proximity thereto along non-diagonal lines. Again, a plate negative may have had the exposure made thereon in non-alignment with the edges of the plate. In order to permit of the desired angular positioning of the plates or negative in such instances, I provide a straight-edge **39** that rests upon a washer **40** and is pivotally connected to the frame by a pin **41**. The lower end of the pin **41** is threaded for the reception of a clamping screw **42** whereby the straight-edge **39** can be secured in its various positions of adjustment about its pivot **41**. An edge of a glass plate or the like will be engaged by the inner edge of the member **39**, so that the plate will be supported in desired angular positions upon the table. In case it is desired to superpose one plate upon another, as indicated by dotted lines in Fig. 3, an additional straight-edge member **43** is provided, secured to the straight-edge **39** by screws **44**.

In Fig. 8 I show a protractor which can be employed with the straight edges of Fig. 1. The protractor comprises a straight-edge **45** that has an upstanding boss **48** which extends into an opening in a protractor plate **46**. An indicating arm **47** has key connection with the boss **48**, so that the members **45** and **47** will move as a unit. These members are held in position upon the plate **46** by a clamp screw **49** that has threaded engagement with the boss. A bar **50** is secured to the underside of the plate **46** in position to be engaged by the straight-edge **27**. A camming disc or lock **51** is mounted upon the lower end of a button **52** that extends through the plate **46**, the camming disc being employed to lock the protractor upon the straight-edge **27** through turning movement of the button. It will be seen that by means of the turn button **49** the straight edge **44** can be clamped in various angular positions, relative to the plate **46**, and that the plate **46** can be readily set at various adjusted positions along the straight-edge **27**.

As shown in Fig. 1, rules or scale bars **53** are secured to the table and serve as a convenient means for indicating the exact positions of the straight-edges.

As shown in Figs. 10 and 11, the table is of substantially the form above described and the straight-edges **55** and **56** which correspond to the straight-edges of Fig. 1, and additional straight-edges **57** and **58** are provided. Rules **59** and **60** are carried by the straight-edges **55** and **56** respectively, and serve as a convenient means for determining the exact distances apart of the various straight-edges.

Referring now to Figs. 13 and 14 I show a structure for use as a negative and plate registering device, for color negatives and plates, wherein aligning bars **62** are provided in lieu of or as supplemental of straight-edges. These aligning bars are mounted upon guide rods in the same manner as the straight-edges of Figs. 1 to 7 and are movable to various positions upon the board. Each bar has mounted thereon a dove-tail bar **63** that extends throughout the major portion of the guide bar. Slide blocks **64** have engagement with the bars **63** and carry set screws **65** whereby the blocks can be clamped at adjusted positions upon the bars **63**. The fingers **66** are pivotally mounted upon the blocks **64** and are held in place thereon by clamp screws **67**, the nut **67** having threaded engagement with the screw **65**. The structure of Fig. 13 is particularly useful as a registering device, which makes it possible to set up any number of color negatives or etched plates, so that proper registry for color printing can be effected. Thus after adjustment of the fingers, a series of negatives to be employed in making a plate for reproduction or printing can be aligned and succeeding series of plates for other colors can be similarly aligned, or the set up can be duplicated for another series for other colors.

I claim as my invention:

1. The combination with a table of the character described, of a guide rod disposed adjacent to one edge of the table, a straight-edge adapted to overlie the table, a head member carrying the straight-edge and embracing the said guide rod and slidable longitudinally of the rod, a presser member carried by and extending transversely of said head, means on the head for yieldably maintaining the presser member in thrust engagement with the rod, in a direction parallel to the straight-edge, a second guide rod mounted adjacent to the opposite edge of the table, a locking device slidable on the last-named rod, means for fastening the device at desired fixed positions on the rod, and means for effecting locking engagement of said device with the adjacent end of the straight-edge.

2. The combination with a table of the character described, of a guide rod mounted adjacent to one edge of the table, a straight-edge adapted to overlie the table, a head member carrying the straight-edge and having a tubular portion loosely surrounding the rod and provided with radially-extending openings through one side thereof, extending parallel to the stright-edge, presser members in said openings and seating against the rod, screws having threaded engagement with said openings, and springs interposed between the presser members and the screws, whereby the head member is maintained under tension at various positions of adjustment on the rod.

3. The combination with a table of the character described, of a guide rod mounted adjacent to one edge of the table, a straight-edge adapted to overlie the table, a head member carrying the straight-edge and having a tubular portion loosely surrounding the rod and provided with radially-extending openings through one side thereof, extending parallel to the straight-edge presser members in said openings and seating against the rod, screws having threaded engagement with said openings, springs interposed between

the presser members and the screws, whereby the head member is maintained under tension at various positions of adjustment on the rod, and pointer fingers carried by the straight-edge and adjustable longitudinally thereof.

4. The combination with a table of the character described, of a guide rod mounted adjacent to one edge of the table, a straight-edge adapted to overlie the table, a head member carrying the straight-edge and having a tubular portion loosely surrounding the rod and provided with radially-extending openings through one side thereof, extending parallel to the straight-edge, presser members in said openings and seating against the rod, screws having threaded engagement with said openings, springs interposed between the presser members and the screws, whereby the head member is maintained under tension at various positions of adjustment on the rod, and pointer fingers carried by the straight-edge and adjustable longitudinally thereof and rotatably adjustable thereon, in a plane parallel to the plane of the table.

5. The combination with a table of the character described, of a guide rod mounted adjacent to one edge of the table, a straight-edge adapted to overlie the table, a head member carrying the straight-edge and having a tubular portion loosely surrounding the rod and provided with a radially extending opening through one side thereof, parallel to the straight-edge, a presser member in said opening and having its inner end curved to the contour of the rod and seating against the rod, a screw having threaded engagement with said opening, and a spring interposed between the screw and said presser member, whereby the head member is maintained under tension at various positions of adjustment on the rod.

EDWARD F. KINZLER.