Sept. 5, 1944. C. W. TRUXELL, JR 2,357,563

FUEL INJECTION PUMP

Filed July 23, 1942 3 Sheets-Sheet 1

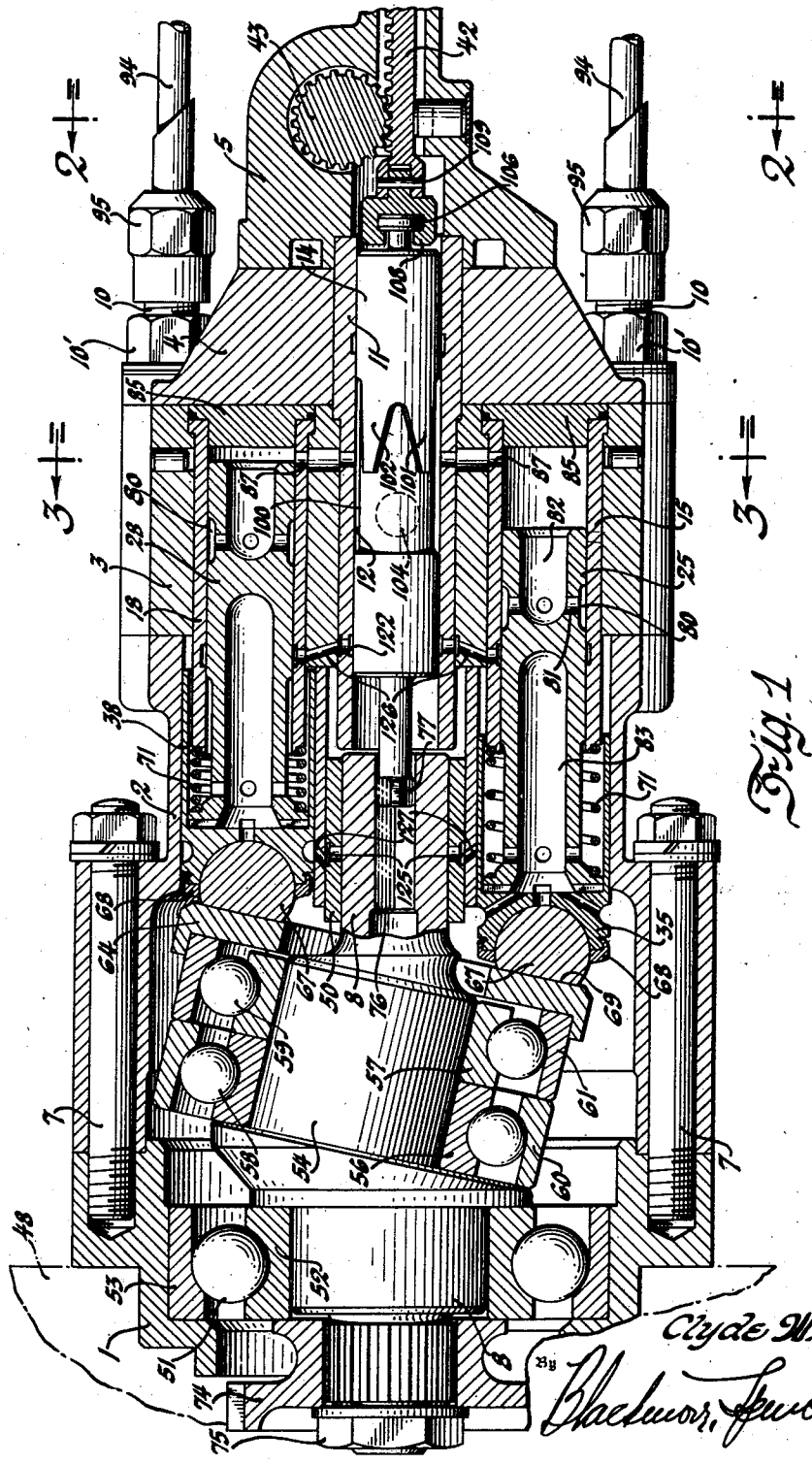

Fig. 1

Inventor
Clyde W. Truxell Jr.
By Blackmore, Spencer & Flint
Attorney

Sept. 5, 1944. C. W. TRUXELL, JR 2,357,563

FUEL INJECTION PUMP

Filed July 23, 1942 3 Sheets-Sheet 2

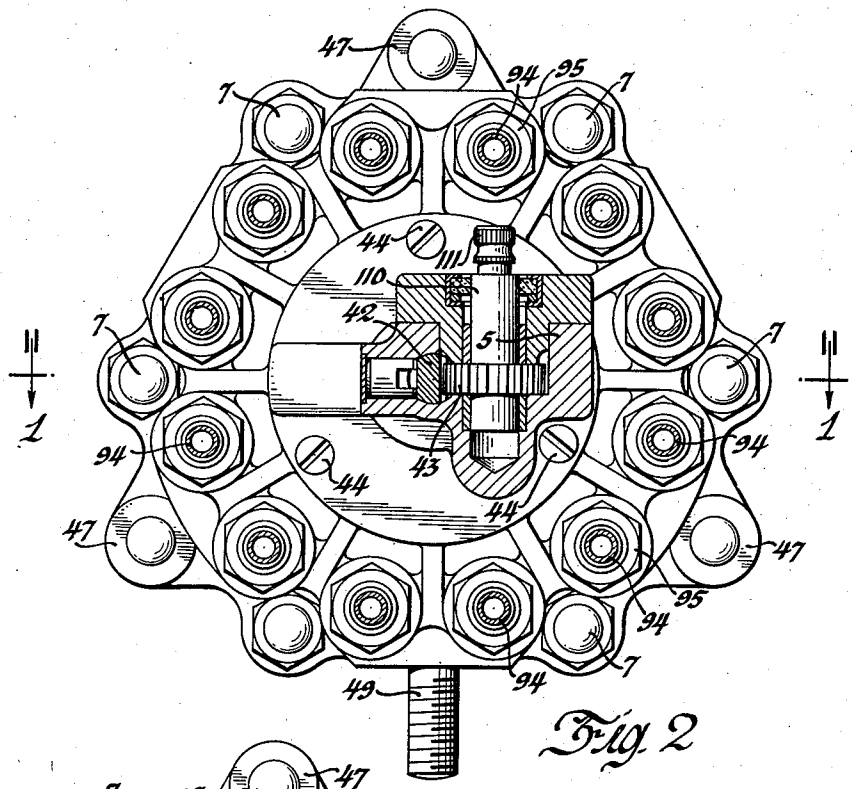

Fig. 2

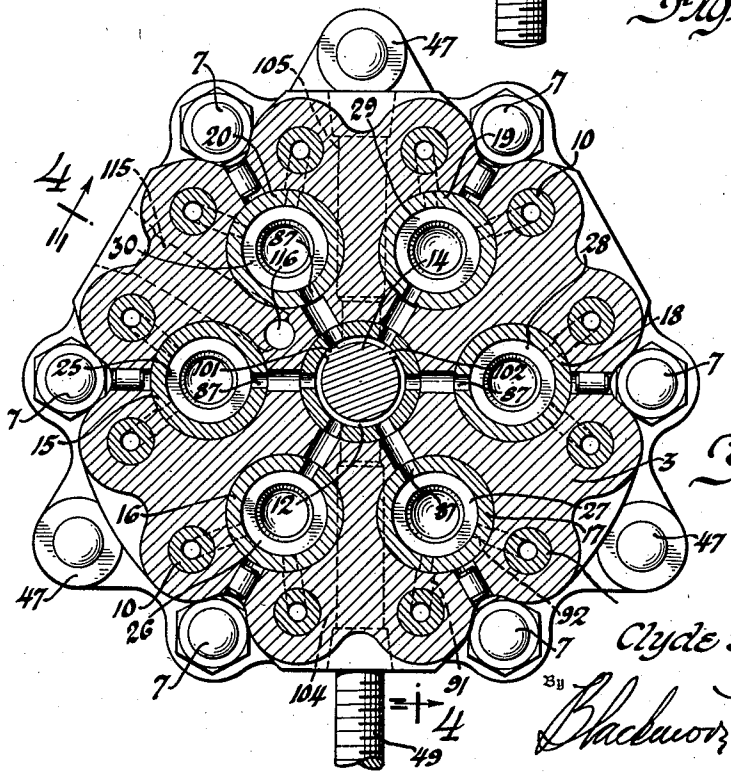

Fig. 3

Inventor
Clyde W. Truxell Jr.
By Blackmore, Spencer & Hind
Attorney

Sept. 5, 1944. C. W. TRUXELL, JR 2,357,563

FUEL INJECTION PUMP

Filed July 23, 1942 3 Sheets-Sheet 3

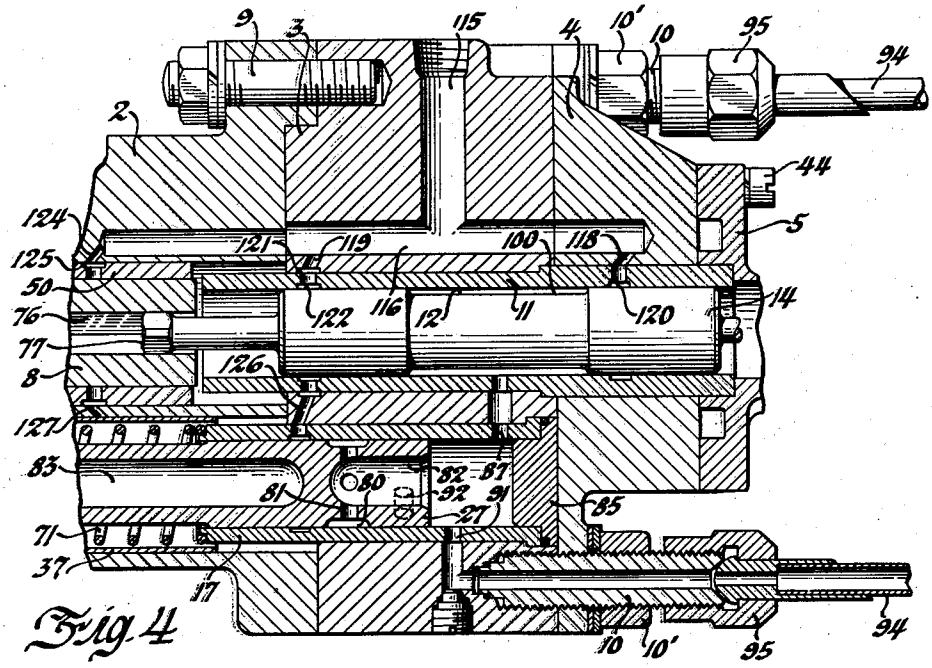

Fig. 4

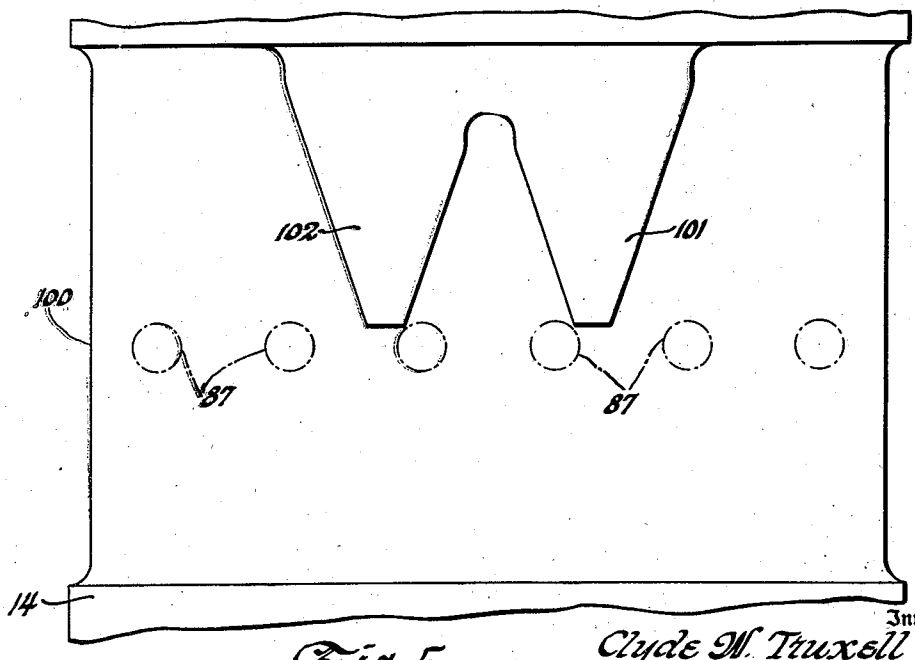

Fig. 5

Inventor
Clyde W. Truxell Jr.
By Blackmore, Spencer & Flint
Attorneys

Patented Sept. 5, 1944 2,357,563

UNITED STATES PATENT OFFICE

2,357,563

FUEL INJECTION PUMP

Clyde W. Truxell, Jr., Northville, Mich., assignor to General Motors Corporation, Detroit, Mich., a corporation of Delaware

Application July 23, 1942, Serial No. 452,051

9 Claims. (Cl. 103—173)

This invention relates to plunger pumps with a plurality of ports in the cylinder wall, from different ones of which fluid is delivered at different points in the stroke of the plunger.

It relates particularly to such plunger pumps for supplying metered quantities of liquid fuel from a single pump cylinder, successively to different cylinders of an internal combustion engine.

The object of the invention is a pump with a plurality of delivery ports and a relief port, and a plunger cooperating with the cylinder to put the pump chamber in communication with the different delivery ports in different positions of reciprocation of the plunger, there being means independent of the pump plunger for closing the relief port to determine the periods of delivery through the different delivery ports.

Another object of the invention is a pump comprising a plurality of plunger pumps of the foregoing kind, with a single rotary valve means common to all the cylinders driven in timed relationship to the plungers and adapted to close the relief port of each cylinder a plurality of times in the delivery stroke of each plunger, to determine the successive periods of delivery through the different delivery ports.

A still further object of the invention is a pump structure of the foregoing kind in which the relief port of each cylinder is a combined inlet and relief port which is only closed by the rotary valve means during the periods of delivery from the cylinder pump chamber, and is at all other times open to permit a free flow of liquid fuel to and fro between the cylinder and the source of fuel supply.

The above and other objects of the invention will be apparent as the description proceeds.

According to the invention, the combined inlet and relief port of each cylinder opens into the pump chamber at a point unswept by the pump plunger, while the delivery ports are longitudinally spaced and swept by the pump plunger which has an annular groove intermediate its ends and in communication with the pump chamber; the delivery port through which delivery first takes place communicates directly with the pump chamber in the first part of the delivery stroke of the plunger and is then covered by the end of the plunger, while the delivery port through which delivery next occurs is placed in communication with the pump chamber through the annular groove in the plunger. The rotary valve member is, of course, driven in timed relationship with the pump plunger and has an annular groove in its periphery interrupted by a plurality of land areas to close the combined inlet and relief port of each cylinder a plurality of times in each revolution of the rotary valve member. The grooved area of the rotary valve member is adapted to put the combined inlet and relief port is communication with the source of supply and this communication is only stopped as and when a land area closes the combined inlet and relief port to cause delivery of fluid through one or another of the different delivery ports.

In a pump unit, comprising a plurality of plunger pumps of the foregoing kind, the cylinders are conveniently arranged parallel to each other, in a circle, with their combined inlet and relief ports radiating in uniform angularly spaced relationship from a cylindrical central chamber containing the rotary valve member common to them all. The rotary valve member turns once in the time taken for all the pump plungers to complete one cycle of movement and it must have as many land areas as there are delivery ports in each pump cylinder. The angle between the leading edges of the lands on the valve member may be equal to 360° divided by the number of pump cylinders and the number of delivery ports per pump cylinder, or any whole number multiple of the resulting figure which is neither a whole number multiple nor a whole number factor of the angle between relief ports. All the lands must traverse the relief port of a given cylinder during the time the plunger of that cylinder is on its delivery stroke. If all the lands are contained in less than half the circumference of the valve member the pump plungers can be driven by a simple wobble plate with suction and delivery strokes extending through equal intervals of time and each through 180° of rotation of the wobble plate.

The drawings show the application of the invention to a pump unit suitable for supplying metered quantities of fuel to the respective cylinders of a twelve cylinder internal combustion engine, and comprising six plunger pumps each of which has two delivery ports. It is driven at the speed of the engine cam shaft (engine speed in the case of a two-cycle engine and half engine speed in the case of a four-cycle engine) giving one delivery to a different cylinder every 30° of crankshaft rotation in the case of a two-cycle engine and every 60° of crankshaft rotation in the case of a four-cycle engine.

In the drawings

Figure 1 is a longitudinal sectional view on line 1—1 of Figure 2.

Figure 2 is a view on line 2—2 of Figure 1.

Figure 3 is a sectional view on line 3—3 of Figure 1.

Figure 4 is a sectional view on line 4—4 of Figure 3.

Figure 5 is a development of the rotary valve member showing the associated inlet and relief ports radiating from the cylindrical central chamber superimposed in dotted outline.

The pump body is conveniently formed of a number of suitable sections 1 to 5 secured together.

The end section 1 and the section 2 are secured together by studs 7 with nuts, and are bored axially to provide a housing for the pump driving means and bearing support for the driving shaft 8 thereof. The sections 2 and 3 are secured together by studs 9 with nuts, while the sections 3 and 4 are secured together by tubular studs 10 with locknuts 10' and are bored axially for a liner 11 providing a central low pressure fuel chamber 12 within which the rotary valve member 14 rotates. The section 3 is also bored for six cylinder barrels 15 to 20 arranged in uniformly spaced relationship in a circle concentric with the cylindrical central chamber and containing plungers 25 to 30 respectively provided with plunger followers 35 to 40 slidable in corresponding but larger bores in the section 2. The cap section 5 is a housing for a rack 42 and pinion 43 by which the rotary valve 14 may be axially moved. It is secured to the section 4 by screws 44.

The sections 1 and 3 of the pump body are preferably of steel for requisite strength while the sections 2, 4, and 5 are of aluminum for lightness.

Three mounting lugs 47 (Figures 2 and 3) are provided on the section 1 for securing the pump body to the frame or gear case 48 (Figure 1) of a twelve-cylinder internal combustion engine (not otherwise shown), while at the opposite end of the pump body on the section 3 is a stud 49 (Figures 2 and 3) by which it may be secured to any suitable outer end support.

The inner end of the driving shaft 8 is supported in a bushing 50 in the body section 2 while the outer end is supported in a ball bearing 51 of which the inner race 52 is secured to the shaft 8 and the outer race 53 is secured in the section 1.

Intermediate of its bearing supports the shaft 8 has a cylindrical portion 54 inclined to its axis and to which are secured the inner races 56 and 57 of ball bearings 58 and 59 of which the outer races 60 and 61 support a wobble plate 64.

Each plunger follower 35 to 40 has a cupped end forming a socket for a ball such as 67 secured therein by a retaining ring such as 68, a flattened area 69 on the balls bearing on the wobble plate 64.

The pump plungers 25 to 30 with their followers are resiliently urged towards the wobble plate by springs such as 71, thus maintaining the flattened areas of the balls which have universal movement in their sockets, in contact with the wobble plate.

It will be appreciated that while the wobble plate 64 and the outer races 60 and 61 are capable of rotation, they are normally prevented from revolving by the frictional forces between these parts and between the flat faces of the balls 67 and the wobble plate which merely wobbles and drives the plungers on their delivery strokes as the shaft 8 is turned by gearing from the engine crankshaft (not shown) to a gear wheel 74 splined on the outer end of the shaft 8 and secured thereto by a nut 75.

The inner end of the shaft 8 is internally splined as at 76 (with an odd flat for indexing purposes) to provide a driving connection to the reduced and externally splined end 77 of the rotary valve member 14, which is capable of axial movement relatively to the shaft 8.

Each of the plungers 25 to 30 is provided with an annular groove such as 80 in its periphery at a point removed from its end, said annular groove being in communication with the pump chamber through drilled ducts 81 communicating with a bore 82 in the end of the plunger. The opposite ends of the plungers are bored for lightness as at 83.

The pump chambers of the cylinder barrels 15 to 20 are closed by plugs such as 85 which are held in position by the section 4 of the pump body.

The pump chamber of each cylinder barrel at a point unswept by the plunger is provided with a combined inlet and relief port 87, said respective ports 87 lying in a plane normal to the axis of the rotary valve member and radiating in uniform angularly spaced relationship at 60° to each other from the central chamber 12 common to them all.

Each cylinder barrel has a pair of longitudinally spaced delivery ports such as 91 and 92 (Figures 3 and 4) through the side of the cylinder barrel at points swept by the plunger. The ports 91 and 92 radiate from their respective cylinder barrels outwards in the section 3 of the pump casing, at an angle to each other, respectively to connect with drilled extensions therein of the tapped holes for an adjacent pair of the tubular studs 10 which constitute delivery outlets of which there are a total of twelve arranged in uniformly spaced relationship in a circle.

The tubular studs 10 are screw threaded throughout their length and are in screw threaded engagement with both the sections 3 and 4 of the pump body in which they are locked by the lock nuts 10'.

Pipes such as 94 are connected to each delivery outlet 10 by nipples such as 95 and serve to conduct fuel therefrom to spring loaded injection valves for the respective cylinders of the engine (not shown).

The rotary valve member 14 has an annular groove 100 in its periphery, interrupted by two land areas 101 and 102. The land areas are tapered in width between their leading and following edges, the leading edges of both being parallel to each other and 90° apart as measured in a plane normal to the axis of the rotary valve member, and the following edges of both being similarly spaced and parallel to each other, as best shown in Figure 5.

Fuel from a low pressure source of supply (not shown) is conducted into and out of the central chamber 12 between the annular groove 100 and the inner wall of the liner 11 through the bores 104 and 105.

The combined inlet and relief ports 87 of each cylinder barrel maintain communication between the central chamber 12 and the pump chambers at all times, except as the lands 101 and 102 move successively over each of the inlet and relief ports 87 and interrupt such communication during parts of the periods in which each pump chamber is open to one or the other of its delivery ports.

The delivery ports 91 and 92 of each pump cylinder are so spaced longitudinally of the respective cylinders that one of them communicates directly with the pump chamber in the first part of the delivery stroke of the plunger and is then covered by the end of the plunger, while the other delivery port is placed in communication with the pump chamber through the annular groove 80 in the plunger in the second part of the delivery stroke thereof.

Since the rotary valve member 14 is driven directly from the driving shaft 8, which through the wobble plate 64 effects suction and delivery stroke movements of all the plungers 25 to 30 once in each revolution of the shaft 8, and the combined inlet and relief ports 87 are at 60° to each other, the lands 101 and 102 of the rotary valve member 14 which are at 90° to each other will successively close the combined inlet and relief ports of each cylinder twice in each revolution of the rotary valve member and will determine the periods of delivery in a repeating cycle first through the uppermost delivery port of a given cylinder and then through the lowermost delivery port of the cylinder next behind in the direction of rotation of the rotary valve member, and thus in alternating progression through each delivery port of all the cylinders once in every revolution of the valve member and the wobble plate and providing a total of twelve deliveries at 30° intervals in every revolution thereof.

The number of degrees of rotation through which the combined inlet and relief ports 87 are closed by the lands 101 and 102 and hence the quantity of fuel delivered through the delivery ports 91, 92 depends on the width of the lands opposite the ports 87.

Since the lands are tapered in width, axial adjustment of the rotary valve member 14 will vary the quantity of fuel delivered through the delivery ports.

It is obvious that the land areas 101 and 102 may be tapered uniformly or irregularly, symmetrically or unsymmetrically or in any desired way. As shown most clearly in Figure 5, the leading and following edges of the lands are equally but oppositely inclined to their axis of rotation and taper uniformly towards their narrower ends to provide for earlier closing with later opening of the combined inlet and relief ports 87 or vice versa, and thus increasing or reducing the quantity of fuel delivered successively through the respective delivery ports 91 and 92 in dependence on the extent to which the rotary valve member is moved in one direction or the other axially of the liner 11.

The outer end of the rotary valve member 14 is reduced in diameter and grooved to form a stud head 106 thereon, which loosely fits in a T slot in a piece 108 secured to the end of the rack 42 by a pin 109, and forming a coupling which permits the rotary valve member to rotate while being held in any desired position of axial adjustment by the rack 42, the position of which is controlled by the pinion 43.

As shown in Figure 2, the pinion 43 is mounted on a shaft 110 having a serrated end 111 by which it may be turned manually or automatically by the engine governor (not shown) to vary the quantity of fuel supplied to the engine.

Referring now to Figure 4, a duct 115 screw threaded for a pipe connection to a supply of lubricating oil (not shown) is provided in the section 3. The duct 115 is connected to a longitudinal duct 116 extending into the sections 2 and 4 for conveying the lubricating oil through the short ducts 118 and 119 to the annular grooves 120 and 121, 122, and thence to the bearing surfaces of the rotary valve member 14, also through the short duct 124 to the annular groove 125 and thence to the shaft 8 in the bearing 50, and from the annular groove 122 through ducts such as 126 to each of the plungers 25 to 30. From the annular groove 125 there are short ducts such as 127 to each of the plunger followers 35 to 40.

The ball bearings 51, 58, and 59 and the balls such as 67 in their sockets are lubricated by oil in the housing which is retained therein at a level above the axis of the shaft 8.

I claim:

1. A plunger pump including a cylinder having a plurality of spaced delivery ports and a relief port, a plunger in the cylinder, said plunger cooperating with said delivery ports to place the pump chamber in communication selectively with different delivery ports in different positions of reciprocation of the plunger, and means independent of the pump plunger for closing said relief port and determining the periods of delivery through said different delivery ports.

2. The combination according to claim 1 in which the means for closing said relief port is a rotary valve operated in timed relationship to the plunger.

3. A plunger pump including a cylinder having a plurality of delivery ports and a relief port, a plunger in the cylinder, said plunger and said cylinder cooperating to place the pump chamber in communication with different delivery ports alternately and successively in different positions of reciprocation of the plunger and means independent of the pump plunger for closing said relief port to determine the period of delivery through said different delivery ports; said plunger having an annular groove intermediate its ends and in communication with the pump chamber; that delivery port through which delivery first takes place communicating directly with the pump chamber in the first part of the delivery stroke of the plunger and then being covered by the end of the plunger while that delivery port through which delivery next occurs is placed in communication with the pump chamber through the annular groove in the plunger.

4. A plunger pump including a cylinder having first and second delivery ports and a relief port, a plunger in the cylinder, said plunger and said cylinder cooperating to place the pump chamber in communication with said delivery ports alternately and successively in different positions of reciprocation of the plunger and means independent of the pump plunger for closing said relief port to determine the period of delivery through said different delivery ports; said plunger having an annular groove intermediate its ends and in communication with the pump chamber; said first delivery port communicating directly with the pump chamber in the first part of the delivery stroke of the plunger and then being covered by the end of the plunger while the second delivery port is placed in communication with the pump chamber through the annular groove in the plunger.

5. A pump comprising, in combination, a plurality of plunger pumps each including a cylinder having a plurality of delivery ports, a relief port, and a plunger cooperative to place the pump chamber of its cylinder in communication with different delivery ports during its stroke movement, means independent of the pump

plungers for closing said relief ports to determine the periods of delivery through said different delivery ports and means for reciprocating said plungers and driving the relief port closing means in timed relationship.

6. A pump comprising, in combination, a body having a plurality of parallel pump cylinders arranged in a circle and in uniformly spaced relationship, a central low pressure fluid chamber, a combined inlet and relief port for each cylinder, said combined inlet and relief ports radiating in uniform angularly spaced relationship from said central chamber, a plurality of longitudinally spaced delivery ports in each of said cylinders, a plunger in each of said cylinders, said plungers being cooperative with their respective cylinders to place their pump chambers alternately in communication with the different longitudinally spaced delivery ports during their stroke movement, a rotary valve member in said central chamber, and means for driving said valve member and said plungers in timed relationship; said valve member being adapted to close said combined inlet and relief ports to determine the periods of delivery through said different delivery ports respectively of each cylinder.

7. The combination according to claim 6 in which the rotary valve member has an annular groove in its periphery interrupted by as many land areas as there are delivery ports in each of said cylinders, said grooved area being adapted to put the combined inlet and relief ports in communication with the central chamber, and each of said land areas effecting closure of said combined inlet and relief ports of each cylinder once in each revolution of the valve member.

8. The combination according to claim 6, in which each cylinder has a pair of longitudinally spaced delivery ports and the rotary valve member has an annular groove in its periphery interrupted by two land areas, said grooved area being adapted to put the combined inlet and relief ports in communication with the central chamber, and said land areas effecting closure of said combined inlet and relief port of each cylinder twice in each revolution of the rotary valve member.

9. A pump unit comprising six parallel pump cylinders arranged in uniformly spaced relationship in a circle, a central low pressure fluid chamber, a combined inlet and relief port for each cylinder, said combined inlet and relief ports radiating at 60° to each other from said central chamber, a pair of longitudinal spaced delivery ports in each of said cylinders, a plunger in each of said cylinders, said plungers being cooperative with their respective cylinders to place their pump chambers in communication with one and the other of the delivery ports of each cylinder alternately during their stroke movement, a rotary valve member in said central chamber, said rotary valve member having an annular groove in its periphery interrupted by two land areas with leading edges spaced 90° apart as measured in a plane normal to the axis of the rotary valve member, and means for driving said valve member and said plungers in timed relationship including a wobble plate, turning at the same speed and in the same direction as the valve member for driving said plungers; said land areas of said valve member successively effecting closure of said combined inlet and relief port of each cylinder twice in each revolution of the rotary valve member to determine the periods of delivery in a repeating cycle first through a delivery port in a cylinder in advance and then through a delivery port in the cylinder next behind in the direction of rotation of the rotary valve member and thus in alternating progression through each delivery port of all the cylinders once in every revolution of the valve member and the wobble plate, and a total of twelve deliveries at 30° intervals in every revolution thereof.

CLYDE W. TRUXELL, JR.