(No Model.)

C. MATTISON.

CUTTER HEAD.

No. 590,422. Patented Sept. 21, 1897.

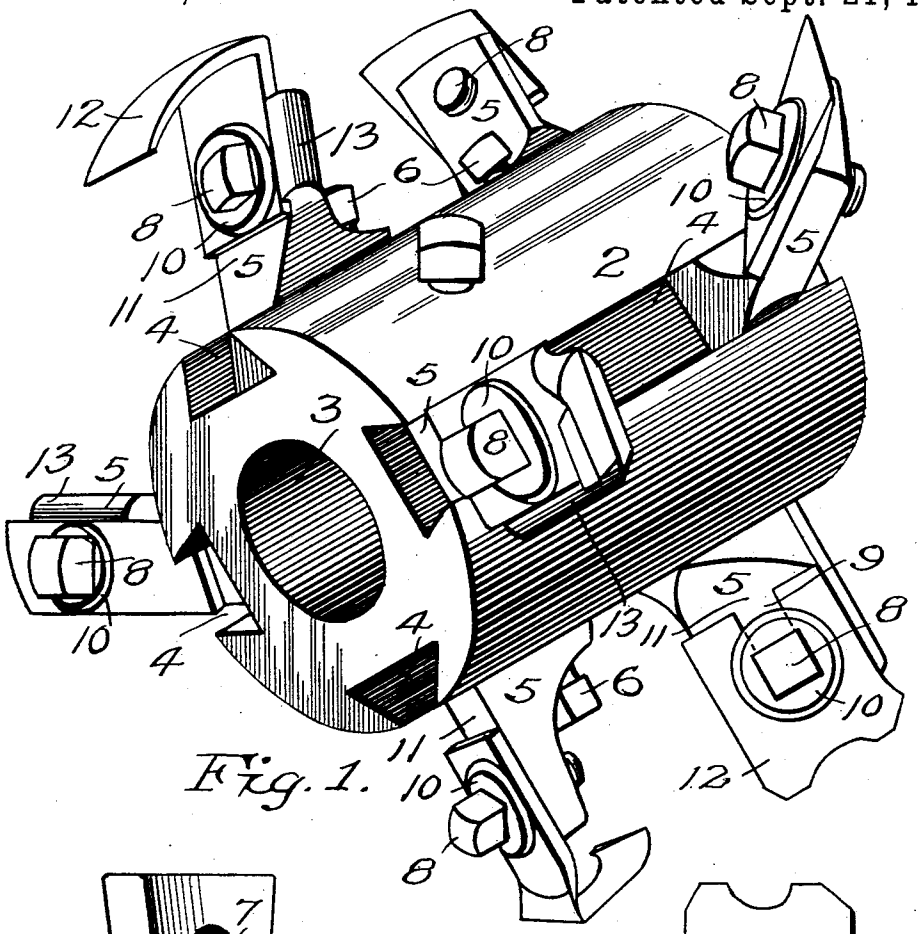

Fig. 1.

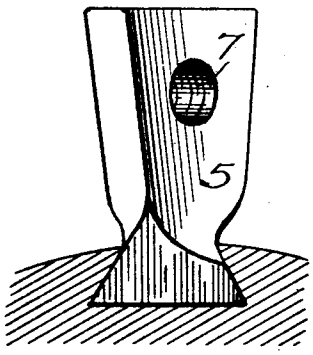

Fig. 2.



Fig. 4.

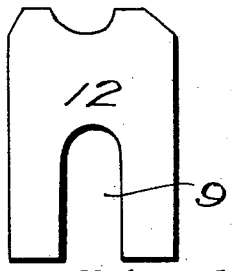

Fig. 3.



Fig. 6.



Fig. 5.

Witnesses;
Chas. E. VanDorn
M. E. Cooley.

Inventor;
Christen Mattison.
By Paul & Hawley
his attorneys.

THE NORRIS PETERS CO., PHOTO-LITHO., WASHINGTON, D. C.

UNITED STATES PATENT OFFICE.

CHRISTEN MATTISON, OF BELOIT, WISCONSIN.

CUTTER-HEAD.

SPECIFICATION forming part of Letters Patent No. 590,422, dated September 21, 1897.

Application filed February 5, 1897. Serial No. 622,135. (No model.)

To all whom it may concern:

Be it known that I, CHRISTEN MATTISON, of Beloit, in the county of Rock and State of Wisconsin, have invented certain new and useful Improvements in Cutter-Heads, of which the following is a specification.

This invention relates to improvements in cutter-heads designed for use in molding-machines, planers, saw-benches, paneling-machines, dado-cutters, &c., and the objects I have in view are to provide a cutter-head that may be readily applied to any machine of this character and which will cut any desired pattern in the material to be operated upon, and in which the knives or cutters may be readily applied or removed or adjusted to any desired position, the knife-carriers being interchangeable and thereby enabling the knives to be shifted or adjusted according to the character of the work to be done.

The invention consists generally in a cutter-head consisting of a hub having a series of dovetailed grooves arranged in its surface and parallel to its axes, a series of adjustable knife-carriers, said carriers being of different forms and having their knife-supporting surfaces at different angles, and a series of knives arranged to be adjustably secured upon said carriers.

The invention consists, further, in the constructions and combinations hereinafter described, and particularly pointed out in the claims.

In the accompanying drawings, forming a part of this specification, Figure 1 is a perspective view of a cutter-head embodying my invention. Fig. 2 is detail showing the arrangement of one of the knife-carrier arms and its location in the dovetailed groove of the hub. Fig. 3 is a detail of one of the knives. Figs. 4, 5, and 6 are details showing samples of the work made by this cutter-head.

In the drawings, 2 represents the hub or body of the device. It is preferably formed with a central or axial opening 3, by means of which it may be mounted upon any suitable driving shaft or spindle. The hub 2 may, however, be formed without the central opening and may be in the form of a suitable shaft adapted to be supported in suitable bearings. The hub 2 is provided upon its outer surface with a series of undercut or dovetailed grooves 4, extending longitudinally and parallel to the axis of the hub. Arranged in these grooves are the interchangeable and adjustable knife-carriers 5. Said carriers are provided with ends fitting into the groove 4, and said carriers are put in place by being inserted through the ends of the grooves. Each carrier is also preferably provided with a set-screw 6, adapted to be screwed against the bottom of the groove and thereby to lock said carrier in the position in which it is placed. The outer or knife-carrying surfaces of the carriers are arranged at different angles, so that different styles and shapes of knives may be secured thereto.

Each carrier is provided with an opening 7, that is screw-threaded and adapted to receive a tap-bolt 8, by means of which the knife may be held in place. Each knife is preferably provided with a slot 9, through which the tap-bolt passes, and a washer 10 is preferably arranged between the head of the bolt and the surface of the knife. The knife-bearing surface 11 of each carrier is arranged to receive one of the knives 12, and I provide a series of knives having different cutting edges, so as to cut the different parts of any desired pattern. Part of the carriers 5 are provided at the rear of the knife-bearing surfaces 11 with a lip 13, against which the knife bears and is held when in use. These lips are placed upon those carriers in which the knife-bearing surfaces are in planes that are substantially at right angles to the axis of the hub. On those carriers in which the knife-bearing surfaces are nearly parallel with the axis of the hub these lips may be omitted, as in that instance there is no tendency to turn the knives upon their fastening-bolts while they are at work.

I have shown in Fig. 4 a spindle formed by this cutter-head. This spindle is cut by the four knives shown at the left-hand end of the cutter-head in Fig. 1.

In Fig. 5 I have shown a straight plain cut or groove formed by one or more of the knives shown at the upper right-hand end of the cutter-head in Fig. 1. In Fig. 6 I have shown a bead cut by the two lower right-hand knives in Fig. 1.

It will be understood that all of these knives may be used simultaneously or that only a

part of them need be used, as required by the character of the work to be done, and any of the knives may be removed from the carriers and knives of different shapes may be substituted therefor. I may make the cutter-head of any desired length and may use any desired number of knife-carriers and knives thereon.

The cutter-head may be adjusted and arranged for use in molding-machines, planers, saw-benches, paneling-machines, and many other forms of cutting-machines. Hence I do not limit myself to the details of the construction or to the use of the machine for any particular purpose.

Having thus described my invention, I claim as new and desire to secure by Letters Patent—

1. A cutter-head, comprising a suitable hub, provided in its surface with a series of dovetailed grooves extending parallel to the axis of the hub, radial knife-carriers fitting in said grooves and adjustable longitudinally thereof, said carriers being provided with knife-bearing surfaces arranged to form rear bearings for the knives, knives arranged upon said carriers, and means for adjustably securing said knives in position.

2. A cutter-head, comprising a suitable hub, provided in its surface with a series of dovetailed grooves extending longitudinally thereof, and parallel with its axis, radial knife-carriers provided with ends fitting in said grooves, and longitudinally adjustable therein, said knife-carriers being provided with knife-bearing surfaces arranged at different angles to the axis of the hub, and forming rear bearings for the knives, knives arranged upon said carriers and means for securing said knives in position.

3. A cutter-head, comprising a suitable hub, provided in its surface with a series of dovetailed grooves extending longitudinally thereof and parallel with its axis, interchangeable knife-carriers adjustably arranged in said grooves, said carriers being provided with knife-holding surfaces and with lips 13 arranged at the rear of said knife-holding surfaces, knives 12 arranged upon said knife-holding surfaces, and means for securing said knives in position.

In testimony whereof I have hereunto set my hand this 29th day of January, A. D. 1897.

CHRISTEN MATTISON.

In presence of—
A. C. PAUL,
M. E. GOOLEY.