(12) INTERNATIONAL APPLICATION PUBLISHED UNDER THE PATENT COOPERATION TREATY (PCT)

(19) World Intellectual Property Organization
International Bureau

(43) International Publication Date
09 November 2017 (09.11.2017)

WIPO | PCT

(10) International Publication Number
WO 2017/191488 A1

(51) International Patent Classification:
G01R 19/00 (2006.01)

(21) International Application Number:
PCT/IB2016/052518

(22) International Filing Date:
03 May 2016 (03.05.2016)

(25) Filing Language: English

(26) Publication Language: English

(71) Applicant: **INSTITUT NATIONAL D'OPTIQUE** [CA/CA]; 2740 Einstein St, Québec, Québec G1P 4S4 (CA).

(72) Inventor: **LEVESQUE, Marc**; 128 de La Modiste St, Saint-Augustin-de-Desmaures, Québec G3A 2L2 (CA).

(74) Agent: **FASKEN MARTINEAU DUMOULIN LLP**; 800-140 Grande Allée East, Québec, Québec G1R 5M8 (CA).

(81) Designated States *(unless otherwise indicated, for every kind of national protection available)*: AE, AG, AL, AM, AO, AT, AU, AZ, BA, BB, BG, BH, BN, BR, BW, BY, BZ, CA, CH, CL, CN, CO, CR, CU, CZ, DE, DK, DM, DO, DZ, EC, EE, EG, ES, FI, GB, GD, GE, GH, GM, GT, HN, HR, HU, ID, IL, IN, IR, IS, JP, KE, KG, KN, KP, KR, KZ, LA, LC, LK, LR, LS, LU, LY, MA, MD, ME, MG, MK, MN, MW, MX, MY, MZ, NA, NG, NI, NO, NZ, OM, PA, PE, PG, PH, PL, PT, QA, RO, RS, RU, RW, SA, SC, SD, SE, SG, SK, SL, SM, ST, SV, SY, TH, TJ, TM, TN, TR, TT, TZ, UA, UG, US, UZ, VC, VN, ZA, ZM, ZW.

(84) Designated States *(unless otherwise indicated, for every kind of regional protection available)*: ARIPO (BW, GH, GM, KE, LR, LS, MW, MZ, NA, RW, SD, SL, ST, SZ, TZ, UG, ZM, ZW), Eurasian (AM, AZ, BY, KG, KZ, RU, TJ, TM), European (AL, AT, BE, BG, CH, CY, CZ, DE, DK, EE, ES, FI, FR, GB, GR, HR, HU, IE, IS, IT, LT, LU, LV, MC, MK, MT, NL, NO, PL, PT, RO, RS, SE, SI, SK, SM, TR), OAPI (BF, BJ, CF, CG, CI, CM, GA, GN, GQ, GW, KM, ML, MR, NE, SN, TD, TG).

(54) Title: OPTICAL SENSOR FOR VOLTAGE MEASUREMENT BY EXTRACTION OF SURFACE CHARGES

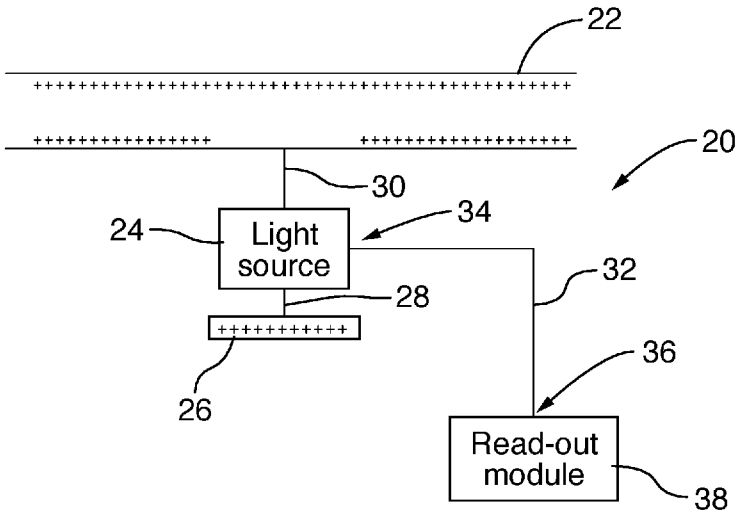

FIG.2

(57) Abstract: A voltage sensor for obtaining a light signal representative of an AC voltage in an electrical conductor, comprising: a conducting device adapted to be placed adjacent the electrical conductor; a light source for emitting the light signal, the light source having a first electrical terminal being electrically connectable to a surface of the electrical conductor and a second terminal being electrically connected to the conducting device for extracting surface electric charges from the electrical conductor towards the conducting device when the first electrical terminal is connected to the surface of the electrical conductor, and thereby powering the light source, an intensity of the light signal being indicative of a value of the AC voltage in the electrical conductor; and an optical waveguide, operatively coupled to the light source, for collecting and propagating at least a portion of the light signal emitted by the light source.

WO 2017/191488 A1

[Continued on next page]

Published:
— *with international search report (Art. 21(3))*

OPTICAL SENSOR FOR VOLTAGE MEASUREMENT BY EXTRACTION OF SURFACE CHARGES

TECHNICAL FIELD

[0001] The present application relates to the field of voltage sensors and more particularly to optical voltage sensors for alternating current applications.

BACKGROUND

[0002] Today, utilities experience unprecedented challenges associated with power delivery. Control of distribution systems will increasingly be dependent on monitoring of the system conditions for both real time management and improved maintenance strategies. The input information from current and voltage sensors will increasingly be important for a large number of applications in distribution automation, protection and control like: sensing at capacitor banks for Volt/VAr optimization, sensing at reclosers and at overhead switches for fault detection, isolation and restoration schemes, sensing at the head and end of the feeder for conservation voltage regulation, power quality monitoring, etc. There is then a growing need for accurate, reliable, inexpensive and easy to mount sensors that can provide real-time information about the state of the power lines.

[0003] Over the past few years, power systems (generation, transmission, and distribution) have undergone several major technological developments with optimized control as their ultimate aim. These developments rely on a better understanding of power system dynamics and inevitably require more instrumentation. In this context, it is important to minimize the electrical, mechanical and environmental impacts of new instrumentation, which must also meet particular reliability and precision requirements as well as isolation standards for each voltage level.

[0004] Generally speaking, current and voltage are the two primary inputs for all electrical parameter measurements. Measuring current is normally quite straightforward and meets the conditions mentioned above. However, the same cannot be said of voltage

measurement, which generally requires the use of measurement transformers connected in parallel with the line(s) forming the system. From a mechanical point of view, these voltage transformers are relatively heavy and their installation requires certain precaution. In addition, installing them on medium or high-voltage systems sometimes requires the use of a bypass disconnect switch so they can be isolated in case of malfunction.

[0005] Measuring equipment suppliers started to develop voltage sensors that offer good precision with no galvanic contact. However, some of these sensors are quite large and/or heavy, and other sensors require an external supply source. Furthermore, the installation of some sensors requires certain precaution.

[0006] Therefore, there is a need for an improved voltage sensor.

SUMMARY

[0007] There is described a system for measuring the voltage of an electrical conductor such as an electric line, wire, cable, or the like. The system comprises a light source and an electrically-conducting device. A first terminal of the light source is electrically connected to the electrically-conducting device and a second terminal of the light source is electrically connectable to the electric wire. By electrically connecting the second terminal of the light source to the electrical wire of which the voltage is to be sensed, at least some of the surface electrical charges present at the surface of the electric wire are extracted therefrom and move towards the electrically-conducting device via the light source. The movement of the electrical charges through the light source powers the light source which in turn emits light. The emitted light corresponds to an optical signal of which the intensity, power or amplitude is indicative of the voltage of the electric wire to be sensed.

[0008] The system further comprises an optical waveguide to which the emitted light or optical signal is optically coupled to a first end of the optical waveguide. The optical waveguide extends along a given length along which the optical signal propagates. A read-out module is positioned at a distance from the light source. The read-out module is optically connected to the second end of the optical waveguide so as to receive and detect

the optical signal propagating along the optical waveguide from the light source. The read-out module is further adapted to process and communicate information on the amplitude and phase of the voltage being determined using the detected optical signal.

[0009] In accordance with a broad aspect, there is provided a voltage sensor for obtaining a light signal representative of an AC voltage in an electrical conductor, comprising: a conducting device adapted to be placed adjacent and spaced apart from the electrical conductor; a light source for emitting the light signal, the light source having a first electrical terminal and a second electrical terminal for powering the light source, the first electrical terminal being electrically connectable to a surface of the electrical conductor and the second terminal being electrically connected to the conducting device for extracting surface electric charges from the electrical conductor towards the conducting device when the first electrical terminal is connected to the surface of the electrical conductor, and thereby powering the light source, an intensity of the light signal being indicative of a value of the AC voltage in the electrical conductor; and an optical waveguide, operatively coupled to the light source, for collecting and propagating at least a portion of the light signal emitted by the light source over a distance.

[0010] In one embodiment, the conducting device comprises a conducting plate extending along a given section of the electrical conductor.

[0011] In another embodiment, the conducting device comprises a conducting cylinder to be positioned around a given section of the electrical conductor, the conducting cylinder being spaced apart from the electrical conductor.

[0012] In one embodiment, the conducting device further comprises two circular and dielectric plates, each positioned at a respective end of the conducting cylinder.

[0013] In one embodiment, the voltage sensor further comprises a cylindrical connector adapted to be positioned around and in physical contact with the electrical conductor and electrically connected to the first terminal of the light source for connecting the light source to the electrical conductor.

[0014] In one embodiment, the conducting cylinder comprises two first hemi-cylindrical plates hingedly connected together and the cylindrical connector comprises two second hemi-cylindrical plates.

[0015] In one embodiment, the light source is electrically connected to a given one of the two first hemi-cylindrical plates and to a given one of the two second hemi-cylindrical plates.

[0016] In one embodiment, the voltage sensor further comprises a body enclosing the conducting device, the light source, and a portion of the optical waveguide, the body being designed and shaped to mate with the electrical conductor in order to be secured thereto.

[0017] In one embodiment, the body is made of a dielectric material.

[0018] In one embodiment, the light source comprises a micro-light source.

[0019] In one embodiment, the micro-light source comprises a micro Light Emitting Diode (LED).

[0020] In one embodiment, the voltage sensor further comprises a return path circuit electrically connected to the light source.

[0021] In one embodiment, the return path circuit comprises at least one of a resistor, a capacitor and a diode.

[0022] In one embodiment, the return path circuit comprises a further light source.

[0023] In one embodiment, the further light source is optically connected to the optical waveguide.

[0024] In one embodiment, the optical waveguide comprises an optical fiber.

[0025] In one embodiment, the conducting device comprises a first conducting plate and at least one second conducting plate, the first conducting plate and the at least one second conducting plate being secured together so as to surround the electrical conductor,

the first conducting plate being connected to the second electrical terminal of the light source.

[0026] In one embodiment, the at least one second conducting plate is connectable to the electrical conductor.

[0027] In another embodiment, the voltage sensor further comprises a further light source having a third electrical terminal and a fourth electrical terminal for powering the further light source, the third electrical terminal being electrically connectable to the electrical conductor and the fourth electrical terminal being electrically connected to a given one of the at least one second conducting plate.

[0028] In one embodiment, the further light source is operatively coupled to the optical waveguide for propagating over the distance at least a portion of a light signal emitted by the further light source.

[0029] In another embodiment, the voltage sensor further comprises a further optical waveguide optically coupled to the further light source for propagating over a distance at least a portion of a light signal emitted by the further light source.

[0030] In one embodiment, the first conducting plate and the given one of the at least one second conducting plate face each other when the voltage sensor is secured to the electrical conductor.

[0031] In accordance with another broad aspect, there is provided a method for obtaining a light signal representative of an AC voltage in an electrical conductor, comprising: placing a conducting device adjacent to the electrical conductor; electrically connecting a first terminal of a light source to the electrical conductor and a second terminal of the light source to the conducting device thereby extracting surface electric charges from the electrical conductor towards the conducting device and powering the light source, emitting the light signal from the light source as a result of the powering of the light source, an intensity of the light signal being indicative of a value of the AC voltage in the electrical

conductor; optically coupling at least a portion of the light signal into an optical waveguide; and propagating the coupled light signal over a distance in the optical waveguide.

[0032] In one embodiment, the method further comprises: receiving said propagated light signal using a detector; determining an intensity value for said received light signal using a processor; and determining a measurement of said AC voltage in the electrical conductor using said determined intensity value using said processor.

BRIEF DESCRIPTION OF THE DRAWINGS

[0033] Having thus generally described the nature of the invention, reference will now be made to the accompanying drawings, showing by way of illustration example embodiments thereof and in which

[0034] FIG. 1 illustrates the repartition of charges in an electrical wire, in accordance with the prior art;

[0035] FIG. 2 is a block diagram schematically illustrating a voltage sensing system, in accordance with an embodiment;

[0036] FIG. 3 illustrates a voltage sensing system enclosed in a cylindrical casing, in accordance with an embodiment;

[0037] FIG. 4A illustrates a voltage sensing system removably securable to an electrical wire when in open position, in accordance with an embodiment;

[0038] FIG. 4B illustrates the voltage sensing system of FIG. 4A when in closed position;

[0039] FIG. 5 illustrates a voltage sensing system comprising three voltage sensors each securable to a respective bundle conductor of a high power line, each voltage sensor comprising a substantially cylindrical casing formed of four curved plates, in accordance with an embodiment;

[0040] FIG. 6 illustrates a voltage sensing system comprising three voltage sensors each securable to a respective bundle conductor of a high power line, each voltage sensor comprising a substantially cylindrical casing formed of two planar or flat plates and two curved plates, in accordance with an embodiment;

[0041] FIG. 7 illustrates a voltage sensing system comprising two voltage sensors each securable to a respective ground conductor of a high power line, in accordance with an embodiment; and

[0042] FIG. 8 is an exemplary graph of a light signal and a voltage as functions of time, in accordance with an embodiment.

[0043] It will be noted that throughout the appended drawings, like features are identified by like reference numerals.

DETAILED DESCRIPTION

[0044] There is described a voltage sensing system for sensing the voltage of an electric/electrical wire, cable, conductor, line, or the like in which an Alternate Current (AC) current flows. The optical sensor may be used for residential installations which use voltages as low as 100 V. It could also be used for power line measurements for voltages as high as hundreds of kV.

[0045] The voltage sensing system comprises a light source electrically connected to an electrically-conducting device. Upon electrical connection of the light source to a conductor of which the voltage is to be sensed, at least some of the electrical surface charges present at the surface of the electrical conductor move towards the electrically-conducting device, thereby generating an electrical current that powers the light source which in turn emits light. The light emitted by the light source, hereinafter referred to as a light or optical signal, is coupled at least partially into an optical waveguide such as an optical fiber at a first end thereof. The second end of the optical waveguide is connected to a read-out module which detects the optical signal propagating from the light source and measures the amplitude, intensity or power of the light signal. The read-out module is further adapted to determine

the voltage in the electrical conductor using the measured optical amplitude, intensity or power of the detected light signal.

[0046] It should be understood that the voltage sensing system may comprise a casing in which the light source, the electrically-conducting device and electrical connectors are contained. The end of the optical waveguide to which the light emitted by the light source is coupled may also be enclosed in the casing as well as a portion of the optical waveguide.

[0047] The casing may be designed and manufactured to clamp on and off an electrical conductor so as to allow easy installation, either on a temporary or permanent basis.. Alternatively, the voltage sensing system may be permanently installed on the electrical conductor to be sensed.

[0048] In an embodiment in which the electrical conductor of which the voltage is to be sensed comprises a protective sheath, it should be understood that an aperture or hole should be performed through the protective sheath in order to physically and electrically connect the voltage sensing system to the electrical conductor.

[0049] In one embodiment, the voltage sensing system carries out a substantially instantaneous or real-time measurement of the voltage of the electrical conductor without disrupting the electrical connections of the electrical conductor.

[0050] Figure 1 illustrates an electrical conductor 10 such as an electrical wire in which an AC electrical current flows, in accordance with the prior art. The arrangement of the electrical charges corresponds to the positive portion of the AC cycle. Since the electrical wire 10 is conductive, the internal electrical charge 12 is equal to zero and the transverse electrical field within the electrical wire 10 is close to zero. Only a slight longitudinal electrical field 14 is present to allow motion of the electrical charges to create the AC current flowing within the electrical wire. Usually this longitudinal electrical field is weak since electrical wires are designed to minimize the losses of electrical potential for the AC currents at which they operate. As illustrated in Figure 1, positive electrical charges 16

accumulate at the outer surface of the electrical wire 10. These surface charges define the potential, i.e. the voltage, of the electrical wire within a given environment.

[0051] Figure 2 illustrates one embodiment of a voltage sensing system 20 for sensing the voltage of an electrical conductor 22 such as an electrical wire. The voltage sensing system 20 comprises a light source 24 and an electrically-conducting device 26 which is electrically connected to a first terminal of the light source 24 via an electrical connection 28. The second electrical terminal of the light source 24 is electrically connectable to the electrical conductor 22 via a second electrical connection 30. The light source 24 is adapted to emit light, i.e. a light or optical signal, having at least one given wavelength. The electrically-conducting device 26 is made of an electrical conductor material and may have any adequate shape as long as it extends along an adequate length of the electrical conductor 22. For example, the electrically-conducting device 26 may be a substantially planar body extending along an axis parallel to the longitudinal axis of the electrical wire 22 and made of an electrically-conducting material such as a metal. In another example, the electrically-conducting device 26 may surround a portion of the cross-sectional perimeter of the electrical conductor 22 or entirely surround the electrical conductor 22. In such a configuration in which the electrically-conducting device 26 entirely surrounds the perimeter of the electrical conductor 22, the electrically-conducting device 26 forms a Faraday cage.

[0052] In one embodiment, the electrical connection 30 is removably connectable to the electrical conductor 22. In another embodiment, the electrical connection 30 is permanently connectable to the electrical conductor 22.

[0053] The voltage sensing system 20 further comprises an optical waveguide 32 which extends between a first end 34 and a second end 36 along a given length. The first end 34 of the optical waveguide 32 is positioned so that at least part of the light emitted by the light source 24 is coupled into the optical waveguide 32. The second end 36 of the optical waveguide 32 is optically connected to a read-out module 38 that is adapted to detect light having at least the given wavelength and measure the intensity, amplitude and/or power of

the detected light. The read-out module 38 may be further adapted to determine the voltage of the electrical wire 22 using the measured optical intensity, amplitude and/or power of the detected light.

[0054] It should be understood that the voltage sensing system 20 further comprises a sensor casing or body (not shown) in which the light source 24, the electrically-conducting device 26 and the electrical connections 28 and 30 are contained. The casing may be adapted to be removably or permanently secured to the electrical conductor 22. In one embodiment, the electrically-conducting device 26 may be integral with the casing so as to form a part thereof. It should also be understood that the casing comprises an aperture to allow the insertion of the optical waveguide therein so as to optically connect the optical waveguide 32 to the light source 24. In one embodiment, the optical waveguide 32 may be secured to the casing.

[0055] In order to measure a light signal representative of the AC voltage in the electrical conductor 22, the electrical connection 30 is electrically connected to the electrical conductor 22. Upon electrical connection between the light source 24 and the electrical conductor 22, at least some of the electrical surface charges present at the outer surface of the electrical wire 22 are extracted from the outer surface and move towards the electrically-conducting device 26 while passing through the light source 24. The movement of the surface charges thereby generates an electrical current that powers the light source 24. Once powered, the light source 24 emits light, i.e. a light signal which is indicative of the number of surface charges that move from the outer surface of the electrical conductor 22 to the electrically-conducting device 26, and therefore the light signal is indicative of the voltage of the electrical conductor 22. At least part of the light emitted by the light source 24 is coupled in the optical waveguide 32. The light coupled into the optical waveguide 32 propagates along the optical waveguide 32 and is detected by the read-out module 38. The read-out module 38 then measures the optical power, amplitude, and/or intensity of the detected light and determines the voltage in the electrical conductor 22 using the measured optical power, amplitude, and/or intensity for the detected light. It should be understood that the voltage of the electrical conductor 22 may be determined from the measured optical

power, amplitude, and/or intensity of the light detected by the read-out module 38 since the amount of light emitted by the light source 24, and therefore the amount of light coupled into the optical waveguide 32 depends on the electrical current that flows through the light source 24 which in turn depends on the derivative of the voltage in the electrical conductor 22.

[0056] In an embodiment in which the electrically-conducting device 26 does not surround the electrical conductor 22, only some of the surface charges move towards the electrically-conducting device 26. In an embodiment in which the electrically-conducting device 26 surrounds a given portion of the electrical conductor 22, substantially all of the surface charges present at the surface of the given portion of the electrical conductor 22 move towards the electrically-conducting device 26. In this case, the electrically-conducting device 26 corresponds to a Faraday cage as described above.

[0057] In one embodiment, the optical power of the light emitted by the light source 24 is substantially proportional to the amplitude of the electrical current applied to the light source 24. In this case, the voltage in the electrical conductor 22 is substantially proportional to the power of light detected by the read-out module 38.

[0058] In another embodiment, the optical power of the light emitted by the light source 24 is not proportional to the amplitude of the electrical current applied to the light source 24. In this case, the voltage in the electrical conductor 22 is determined using the transfer function between the optical power of the light emitted by the light source 24 and the amplitude of the electrical current applied to the light source 24. The transfer function of the light source 24 may be determined in a prior calibration step for example.

[0059] In one embodiment, the light source 24 is chosen so that the voltage required to power the light source 24 is less than the voltage in the electrical conductor 22. In one embodiment, the voltage required for powering the light source 24 is low enough so that the light source 24 acts as a quasi short-circuit between the electrical conductor 22 and the electrically-conducting device 26.

[0060] In one embodiment, the light source 24 is a micro-light source such as a micro Light Emitting Diode (LED) source that is adapted to efficiently convert weak electrical currents into light signals. In one embodiment, a micro-light source is a light source that operates at a voltage that is equal to or less than about 1% of the voltage to be sensed in the electrical conductor 22. For example, the micro-light source may operate at a current below 1 mA or even of the order of μA to measure a voltage in the electrical conductor 22 in the order of 10 kV.

[0061] In this case, the current obtained from the movement of charges between the electrical conductor 22 and the electrically-conducting device 26 caused by the electrical connection between the micro-light source and the electrical conductor 22 is sufficient for powering the micro-light source. This current is then converted to a light signal by the micro-light source.

[0062] In one embodiment, the voltage sensing system 20 may further be adapted to measure the phase of the voltage in the electrical wire 22 when the light source 24 has a sufficiently fast response time to allow the read-out module 38 to temporally resolve the signal with a few harmonics. For example, at least some LED sources can meet this condition. Since the variation of voltage between the electrical conductor 22 and the electrically-conducting device 26 creates the electrical current that powers the light source 24 and if any parasitic resistance and inductance are neglected, the electrical current flowing through the light source 24 is proportional to the derivative of the voltage. The amplitude of the light generated by the light source 24 may then be determined using the current applied to the light source 24 and the transfer function of the light source 24. Therefore, the voltage may be determined using the amplitude of the optical signal generated by the light source 24 and the reverse transfer function of the light source 24. It should be understood that the phase and the harmonics of the voltage may also be determined using the same method.

[0063] In one embodiment, the optical waveguide 32 is chosen so as to be sufficiently long for electrically isolating the read-out module 38 from the electrical conductor 22.

[0064] In one embodiment, the optical waveguide 32 is made of a non-conducting material such as glass or polymer and the read-out module 38 is electrically insulated from the voltage sensing system 20. In one embodiment, the optical waveguide 32 is an optical fiber which may be made of glass (silica), plastic, or polymer. The optical fiber may also be sheathed with a highly effective insulating material. The material used can have a breakdown voltage greater than that of the air. This high degree of electrical isolation and breakdown resistance could be an even greater advantage at medium or even high voltages.

[0065] In one embodiment, the optical waveguide 32 extending between the light source 24 and the read-out module 38 is an optical fiber or any light guide which does not require power for operation and does not need to carry electricity. It simply carries an optical signal from the light source 24 to the read-out module 38. The optical signal is strong enough to ensure readability of the optical signal at a location away from the light source 24, for example at a location meters or tens of meters away from the location of the light source 24, even when using plastic optical fibers. This optical signal is therefore unaffected by electromagnetic perturbations in the environment of the optical fiber. As mentioned above, it can also act as an electrical insulator between the sensing sub-system and the read-out sub-system.

[0066] In one embodiment, the use of an optical fiber provides a high degree of electromagnetic interference immunity and excellent electrical isolation and breakdown resistance. The voltage sensing system 20 is inherently safe for the power system, because failure of the voltage sensing system 20 does not cause a fault or a short circuit to ground.

[0067] The read-out module 38 is adapted to transform the measured optical amplitude, intensity, or power and, optionally the measured phase if the light source has a sufficiently fast response time, of the received light signal into an electrical output signal. As mentioned above, the measured optical amplitude, intensity, or power of the light signal is indicative of the voltage of the electrical conductor 22. Furthermore, the measured phase of the light signal is indicative of the phase of the electrical current flowing into the electrical conductor since the optical signal detected by the read-out module 38 is function of the derivative of

the voltage of the electrical conductor 22. This optical signal generated by the light source 24 can be measured using a photodetector such as a photodiode, which converts the optical signal into an electrical signal. This electrical signal represents the optical amplitude, intensity or power of the light signal over time, and optionally the phase of the light signal over time.

[0068] The read-out module 38 may comprise a data analysis unit which could include printed circuit boards with data processing capabilities, such as a processor to allow analysis of the electrical signal generated by the photodetector. For example, instantaneous voltage and phase readings could be extracted, averages could be calculated, time-stamping and event recordation could be performed, historical data could be cumulated, harmonic content analysis could be performed. The data could be further transmitted to other modules, such as anomaly-detection algorithms to allow an in-depth analysis of the grid. As will be readily understood, the electrical signal could be converted to a digital signal.

[0069] In one embodiment, a calibration step may be required. In an embodiment in which the light source comprises at least one micro-LED, the characterization of the micro-LED temperature behavior and the development of a signal compensation approach may be required as will be understood by one skilled in the art. It may be sufficient to simply calibrate the micro-LED at different temperatures for example. If the behavior of the micro-LED as a function of temperature is reproducible, the calibration approach may be appropriate. In one embodiment, a second substantially identical micro-LED may be used to determine the behavior of the micro-LED provided in the voltage sensing system 20. The second micro-LED is not electrically connected to the voltage sensing system 20. The second micro-LED is kept at the same temperature as that of the voltage sensor micro-LED. A known current is made to flow in the second micro-LED. The output optical power is measured. The electrical-to-optical conversion factor of the second micro-LED will then be known at all times. The second micro-LED being substantially identical to the voltage sensor micro-LED, the electrical-to-optical conversion factor of the micro-LED of the voltage sensor can be extrapolated. In the event that the micro-LEDs are identical and the

behavior of the two micro-LEDs varies in time, the time variations are substantially compensated since the two micro-LEDs will age in substantially the same manner.

[0070] Calibration tests can be carried out to determine the impact of parameters such as temperature, presence of other electrical fields in the area, electromagnetic noise, magnetic fields, etc., on the reading obtained by the voltage sensing system 20. A calibration adjustment can then be done on the measured voltage to increase accuracy of the reading.

[0071] In one embodiment, it is possible to add electrical components to the light source in order to protect the light source. For example, electrical components such as capacitors and/or resistors may be mounted in series or in parallel with the light source 24 in order to avoid damaging the light source 24 in case of stray currents for example. In another example, the additional component may be a second light source such as a second micro-LED connected in parallel to the first light source.

[0072] As described above, the voltage sensing system 20 comprises a casing or sensor body (not shown) to enclose its components. The casing may be designed and shaped to closely mate with the electrical wire 22, thereby ensuring an appropriate positioning of the components of the voltage sensing system 20 with respect to the electrical wire 22 and an adequate electrical connection between the light source 24 and the electrical wire 22. For example, the casing could be designed and shaped to loosely mirror and receive the shape of the electrical wire 22. As will be readily understood, the casing needs not closely mate with the electrical wire 22. Alternatively, it could have a shape which does not mate with the electrical wire 22. In one embodiment, the casing is made of a dielectric material.

[0073] Tests were carried out with a micro-LED source from supplier InfiniLED™. Its current threshold was about 8 μA which was slightly too high for a low-voltage measuring device. As will be readily understood, a micro-LED with a current threshold of about 0.5 μA would yield better results for a low-voltage application. A person skilled in the art will select a micro-LED with an appropriate current threshold and an appropriate pattern of diode conduction.

[0074] It could also be possible to use a dual-LED kit in which each LED has a different polarity, thereby emitting an optical signal during both the positive and negative phases of the voltage in the electrical wire.

[0075] Figure 3 illustrates one embodiment of a voltage sensing system 50 which comprises a casing 52 adapted to be mounted on an electrical wire 22 of which the voltage is to be sensed. The voltage sensing system 50 further comprises a micro-LED 54 and an optical fiber 56 having one end optically coupled to the micro-LED 54 for coupling light from the micro-LED 54 into the optical fiber 56 and another end optically coupled to a read-out module 38 to allow detection of the light propagating in the optical fiber 56.

[0076] The casing 52 comprises a hollow cylindrical body 58 made of an electrically-conducting material and two circular bodies 60 and 62 each made of an electrical insulating or dielectric material. The body 58 corresponds to the electrically-conducting device 26 to be used for generating the electrical current in order to power the micro-LED 54. The hollow cylindrical body 58 defines a cavity and the diameter of the cylindrical body 58 is chosen so that the cavity may accommodate at least the electrical wire 22, the micro-LED 54, and the electrical connectors for electrically connecting the micro-LED 54 to the electrical wire 22 and to the hollow cylindrical body 58. The cylindrical body 58 extends between a first end and a second end along a longitudinal axis which corresponds to the longitudinal axis of the electrical wire 22. The circular body 60 is secured at the first end of the cylindrical body 58 while the circular body 62 is secured at the other end of the cylindrical body 58. The circular bodies 60 and 62 are positioned substantially perpendicularly to the longitudinal axis of the cylindrical body 58 and their outer diameter substantially corresponds to the inner diameter of the cylindrical body 58 so that they snuggingly fit into the cavity of the cylindrical body 58. The circular bodies 60 and 62 each further comprise a central circular aperture for receiving the electrical wire 22. The diameter of the aperture is substantially equal to the outer diameter of the electrical wire 22. The circular body 60 further comprises a fiber receiving aperture through which the optical fiber 56 extends.

[0077] The micro-LED 54 is secured within the cavity of the cylindrical body 58 and a first electrical terminal of the micro-LED 54 is electrically connected to the internal surface of the cylindrical body 58. The second electrical terminal of the micro-LED 54 is connectable to the electrical wire 22.

[0078] In one embodiment, the voltage sensing system 50 further comprises a return-path circuit 64 that is connected in parallel to the micro-LED 54. The return-path circuit 64 can be provided to allow the current to travel and to protect the micro-LED 54 from accidental peak currents. In the illustrated embodiment, the return-path circuit comprises a diode 66. It should be understood that the return-path circuit 64 may comprise a component other than the diode 66 or comprise components in addition to the diode 66. For example, the return-path circuit 64 may comprise a resistor. In another example, the return-path circuit 64 may comprise a return-path light source, such as a further micro-LED source.

[0079] In an embodiment in which the return-path circuit 64 comprises a return-path light source, the return-path light source may be coupled to a second and different optical fiber. Alternatively, the return-path light source may be optically coupled to the same optical fiber and a fiber optical coupler may be used to connect the micro-LED 54 and the return-path light source to the optical fiber 56. The return-path light source would allow obtaining an optical signal during the other phase of the voltage in the electrical wire 22, e.g. the negative phase of the voltage if the micro-light source is adapted to measure the positive phase of the voltage.

[0080] When the voltage sensing system 50 is positioned on the electrical wire 22, the second terminal of the micro-LED 54 is electrically connected to the electrical wire 22. Surface charges may then move from the surface of the electrical wire 22 up to the cylindrical body 58 which becomes positively charged during the positive phase of the AC current. The movement of the surface charges creates an electrical current which powers the micro-LED 54, and the micro-LED 54 emits a light signal which is optically coupled into the optical fiber 56. The light signal travels within the optical fiber 56 up to the read-out module which detects the light signal and measures its amplitude.

[0081] Figure 4A and 4B illustrate one embodiment of a Faraday cage voltage sensing system 100 which is adapted to be removably secured to an electrical wire 22. The voltage sensing system 100 comprises two hemi-cylindrical hollow casing bodies 102 and 104 which are pivotally connected together via a hinge connection 106. The body 104 is provided with a hook 108 that cooperates with a protrusion 110 for securing together the bodies 102 and 104. The casing bodies 102 and 104 are made of a non-conducting material such as plastic. Alternatively, the casing bodies 102 and 104 may be made of a conducting material such as metal.

[0082] The internal face of each casing body 102 and 104 is provided with a layer of conducting material 112 and 114, respectively, which each forms a hollow conducting hemi-cylinder.

[0083] The voltage sensing system 100 further comprises two conducting hemi-cylindrical bodies 116 and 118 which are each optionally concentric with a respective casing body 102, 104. The internal diameter of the hemi-cylindrical bodies 116 and 118 substantially corresponds to the diameter of the electrical wire 22. Two non-conducting plates 120 and 122 connect the conductor hemi-cylindrical body 116 to the casing body 102 so that the bodies 102 and 116 and the plates 120 and 122 be fixedly secured together. Two non-conducting plates 124 and 126 connect the conductor hemi-cylindrical body 118 to the casing body 104 so that the bodies 104 and 118 and the plates 124 and 1206 be fixedly secured together.

[0084] The voltage sensing system 100 also comprises a micro-LED 128 which is electrically connected to the conducting hemi-cylindrical body 112 and to the conducting hemi-cylindrical body 116. In the illustrated embodiment, an optional return-path circuit 130 is connected in parallel to the micro-LED 128. The return-path circuit 130 comprises a resistor 132 and a diode 134 connected together in parallel. It should be understood that any other adequate return-path circuit may be used. Alternatively, no return-path circuit may be included.

[0085] In order to measure the AC voltage of the electrical wire 22, the voltage sensing system 100 is removably secured to the electrical wire 22 by inserting the electrical wire 22 between the two hemi-cylindrical bodies 116 and 118, abutting the plates 120 and 122 against the plates 124 and 126, respectively, and securing the hook 108 to the protrusion 110. Figure 4B illustrates the voltage sensing system 100 when in closed position, when the two hemi-cylindrical casing bodies 102 and 104 are secured together. When the voltage sensing system 100 is secured to the electrical wire 22, the hemi-cylindrical bodies 116 and 118 are in physical contact with the electrical wire 22. Since the hemi-cylindrical body 118 has a null charge at the beginning, surface charges present at the surface of the electrical wire 22 flow from the electrical wire 22 to the conducting hemi-cylinders 112 and 114, thereby powering the micro-LED 128. The micro-LED 128 then emits light which is at least partially coupled into an optical fiber 136.

[0086] In one embodiment, insulating caps such as the circular bodies 60 and 62 shown in Figure 3 are present at each end of the voltage sensing system 100.

[0087] In one embodiment the length of the voltage sensing system 100 along its longitudinal axis is comprised between about 20 cm and about 50 cm.

[0088] The voltage sensing system 100 gives a direct measurement of the surface charge of the electrical wire 22. It does not provide a measurement of the voltage in the electrical wire. However, knowing the electrical conditions of the installation of the wire and sensor or via calibration, the voltage in the electrical wire can be extrapolated from the measured surface charge of the electrical wire 22, as described above.

[0089] Since the voltage sensing system 100 forms a Faraday cage and therefore the electromagnetic field within the Faraday cage is null, the measurements made by the voltage sensing system 100 are not sensitive to the relative permittivity of the material comprised between the electrical wire 22 and the conducting hemi-cylindrical bodies 112 and 114, i.e. the electrically-conducting device. In one embodiment, this insensitivity to the relative permittivity offers a large choice for the material of the sensor.

[0090] While figures 4A and 4B show a hook 108 and a protrusion 110 for removably securing together the casing bodies 102 and 104, it should be understood that any adequate securing means may be used such as a clamp system, a screw, etc.

[0091] It should also be understood that the packaging and configuration of the components forming the voltage sensing system 100 may vary and be optimized by one skilled in the art. For example, any adequate casing allowing to secure, removably or not, the voltage sensing system 100 to an electrical conductor of which the voltage is to be sensed, may be used.

[0092] In one embodiment, the above-described voltage sensing system may be used for measuring voltages in the conductor cables or wires of a power transmission line. Figure 5 illustrates one embodiment of a voltage sensing system 150 to be installed on a three-phase power or overhead transmission line comprising three bundle conductors 152, 154, and 156 positioned in parallel along a given axis. The bundle conductor 154 is positioned between the bundle conductors 152 and 156. The three conductors 152, 154, and 156 each carry an AC current of the same frequency and voltage amplitude relative to a common reference but with a phase difference of one third of the period. Therefore, the first bundle conductor 152 is associated with a first phase, i.e. phase 1, the second bundle conductor 154 is associated with a second phase, i.e. phase 2, while the third bundle conductor is associated with a third phase, i.e. phase 3. Each bundle conductor 152, 154, 156 is provided with a respective voltage sensing system or voltage sensor 162, 164, 166, respectively, that is removably or permanently secured to its respective bundle conductor 152, 154, 156.

[0093] The voltage sensor 162 comprises four elongated and curved plates 158a-158d which each extend along the same longitudinal axis as the longitudinal axis of the bundle conductor 152 when the voltage sensor 162 is connected to the bundle conductor 152. Each plate 158a-158d is made of an electrically-conducting material so that the four plates 158a-158d form together the above-described electrically-conducting device. The cross-section of each plate 158a-158d in a plane orthogonal to the longitudinal axis presents a curved or semi-circular shape. The voltage sensor 162 also comprises a micro-light source 160

optically coupled to an optical fiber (not shown) for propagating the light emitted by the micro-light source 160 up to a read-out module (not shown). The micro-light source 160 is electrically connected to the conducting plate 158a and electrically connectable to the bundle conductor 152. Each conducting plate 158b-158d is individually and directly connectable to the bundle conductor 152 via any adequate electrical connector.

[0094] In one embodiment, the conducting plates 158a-158d are secured together using two sets of two insulating hemi-circular plates, each set being positioned at a respective end of the voltage sensor 162. The connection system may be used for the voltage sensors 164 and 166.

[0095] The voltage sensor 164 comprises four elongated and curved plates 168a-168d which each extend along the same longitudinal axis as the longitudinal axis of the bundle conductor 154 when the voltage sensor 164 is connected to the bundle conductor 154. Each plate 168a-168d is made of an electrically-conducting material so that the four plates 168a-168d form together the above-described electrically-conducting device. The cross-section of each plate 168a-168d in a plane orthogonal to the longitudinal axis presents a curved or semi-circular shape. The voltage sensor 154 also comprises a first micro-light source 170 optically coupled to an optical fiber (not shown) for propagating the light emitted by the micro-light source 170 up to a read-out module (not shown). The micro-light source 170 is electrically connected to the conducting plate 168c and electrically connectable to the bundle conductor 154. The voltage sensor 164 further comprises a second micro-light source 172 optically coupled to an optical fiber (not shown) for propagating the light emitted by the micro-light source 172 up to the read-out module. The micro-light source 172 is electrically connected to the conducting plate 168a and electrically connectable to the bundle conductor 154. Each conducting plate 168b and 168d is individually and directly connectable to the bundle conductor 154 via any adequate electrical connector.

[0096] In one embodiment, the purpose of the conducting plates 158b, 158c, and 158d, which are directly connectable to the bundle conductor 152 without any light source, is to complete the surrounding wall having curved edges for enclosing the bundle conductor 152.

The curved edges decrease the risk of external electrical discharge. In the same or another embodiment, the purpose of the conducting plates 158a, 158b, 158c, and 158d is to maintain an adequate measurement precision in case of bad weather such as rain, ice, snow, and/or the like. In this case, the top portion of the resulting surrounding wall protects the voltage sensor from adverse weather conditions.

[0097] The voltage sensor 166 comprises four elongated and curved plates 174a-174d which each extend along the same longitudinal axis as the longitudinal axis of the bundle conductor 156 when the voltage sensor 166 is connected to the bundle conductor 156. Each plate 174a-174d is made of an electrically-conducting material so that the four plates 174a-174d form together the above-described electrically-conducting device. The cross-section of each plate 174a-174d in a plane orthogonal to the longitudinal axis presents a curved or semi-circular shape. The voltage sensor 166 also comprises a micro-light source 176 optically coupled to an optical fiber (not shown) for propagating the light emitted by the micro-light source 176 up to the read-out module. The micro-light source 176 is electrically connected to the conducting plate 174c and electrically connectable to the bundle conductor 156. Each conducting plate 174a, 174b, and 174d is individually and directly connectable to the bundle conductor 156 via any adequate electrical connector.

[0098] While the voltage sensors 162, 164 and 166 each comprise four electrically-conducting plates 158a-158d, 168a-168d, and 174a-174d, respectively, it should be understood that the number of electrically-conducting plates may vary. For example, each voltage sensor 162, 164, 166 may comprise a single tubular electrically-conducting plate that surrounds a respective bundle conductor 152, 154, 156. In another example, each voltage sensor 162, 164, 166 may comprise two hemi-tubular electrically-conducting plates which, when connected together, surround a respective bundle conductor 152, 154, 156. It should also be understood that the shape of the electrically-conducting plate(s) may vary. For example, the electrically-conducting plates may be flat or planar, curved, hemi-tubular, or the like.

[0099] By dividing the electrically-conducting device into several conducting parts, e.g. into four conducting plates 158a-158d as in the illustrated embodiment, it is possible to choose to which electric field the sensor will be the most sensitive. Each conducting piece or conducting plate 158a-158d is more sensitive to electrical sources located substantially perpendicular to its surface and less sensitive to electrical sources positioned on a side thereof. The same applies to the conducting plates 168a-168d and 174a-174d.

[00100] Therefore, the conducting plate 168c is mainly sensitive to the phase 1 conductor, i.e. the bundle conductor 152, and the light source 170 connected to the conducting plate 168c will provide information about the difference of electric potential between the bundle conductors 152 and 154, i.e. between phases 1 and 2. The conducting plate 168a is mainly sensitive to the phase 3 conductor, i.e. the bundle conductor 156, and the light source 172 connected to the conducting plate 168a will provide information about the difference of electric potential between the bundle conductors 154 and 156, i.e. between phases 2 and 3. The conducting plate 158a of the voltage sensor 162 is mainly sensitive to the phase 2 conductor, i.e. the bundle conductor 154 but is also sensitive to the phase 3 conductor, i.e. the bundle conductor 156. The conducting plate 174c of the voltage sensor 166 is mainly sensitive to the phase 2 conductor, i.e. the bundle conductor 154 but also sensitive to the phase 1 conductor, i.e. the bundle conductor 152. In this case, the read-out module is adapted to determine the voltage of the three bundle conductors 152, 154, 156 using the measured light amplitudes, intensities or powers coming from the micro-light sources 160, 170, 172, and 176.

[00101] Figure 6 illustrates another embodiment of a voltage sensing system 178 for measuring the voltage in three bundle conductors 179, 180, and 181. In this embodiment, the voltage sensing system 178 comprises three voltage sensors 182, 184, and 186 each connectable to a respective bundle conductor 179, 180, and 181. Each voltage sensor 182, 184, 186 comprises a casing in which at least one micro-light source is enclosed and an optical waveguide for collecting the light emitted by the micro-light source. Each casing comprises four elongated plates which are disposed so as to enclose a respective bundle conductor 179, 180, 181.

[00102] The voltage sensor 182 comprises a casing formed of a curved top plate 188a, two side plates 188b and 188c, and a bottom plate 188d. The side plate 188b is made of a conducting material and is electrically connected to the micro-light source 190 which is electrically connectable to the bundle conductor 179. The plates 188a, 188c, and 188d are each made of a conducting material and each connectable to the bundle conductor 179. The plates 188a-188d are shaped and sized so that the casing protects at least the microlight source from precipitation such as rain, snow, and/or the like. The curved plate 188a is provided with rounded ends which are each adjacent to a respective side plate 188b, 188c. The rounded ends are each inwardly curved so that any precipitation received by the top plate 188a flows away from the side plates 188b and 188c and no electrical contact be created between the top plate 188a and the side plates 188b and 188c. The bottom plate 188d is also provided with rounded or curved ends to protect the interior of the casing.

[00103] The side plate 188b which is electrically connected to the micro-light source 190 is oriented so as to be substantially orthogonal to the axis that passes by the bundle conductors 180 and 181 in order to be sensitive to these two bundle conductors. The plates 188a-188d are connected together using a non-conducting or electrically insulating material to ensure that the light signal emitted by the micro-light source 190 comes only from the movement of surface charges between the bundle conductor 179 and the plate 188b. Furthermore, electrically connecting all of the plates 188a-188d to the bundle conductor 179 ensures that substantially no electric discharge will occur between the plates 188a-188d.

[00104] The voltage sensor 184 comprises a casing formed of a curved top plate 192a, two side plates 192b and 192c, and a bottom plate 192d. The side plate 192b is made of a conducting material and is electrically connected to the micro-light source 194 which is electrically connectable to the bundle conductor 180. The side plate 192c is made of a conducting material and is electrically connected to the micro-light source 196 which is electrically connectable to the bundle conductor 180. The plates 192a and 192d are each made of a conducting material and each connectable to the bundle conductor 180. The plates 192a-192d are shaped and sized so that the casing protects at least the microlight source from precipitation such as rain, snow, and/or the like. The curved plate 192a is provided

with rounded ends which are each adjacent to a respective side plate 192b, 192c. The rounded ends are each inwardly curved so that any precipitation received by the top plate 192a flows away from the side plates 192b and 192c and no electrical contact be created between the top plate 192a and the side plates 192b and 192c. The bottom plate 192d is also provided with rounded or curved ends to protect the interior of the casing.

[00105] The side plate 192b which is electrically connected to the micro-light source 194 is oriented so as to be substantially orthogonal to the bundle conductor 181 in order to be sensitive to this bundle conductor. The side plate 192c which is electrically connected to the micro-light source 196 is oriented so as to be substantially orthogonal to the bundle conductor 179 in order to be sensitive to this bundle conductor. The plates 192a-192d are connected together using a non-conducting or electrically insulating material to ensure that the light signal emitted by the micro-light source 194 comes only from the movement of surface charges between the bundle conductor 180 and the plate 192b and the light signal emitted by the micro-light source 196 comes only from the movement of surface charges between the bundle conductor 180 and the plate 192c. Furthermore, electrically connecting all of the plates 192a-192d to the bundle conductor 180 ensures that substantially no electric discharge will occur between the plates 192a-192d.

[00106] The voltage sensor 186 comprises a casing formed of a curved top plate 198a, two side plates 198b and 198c, and a bottom plate 198d. The side plate 198c is made of a conducting material and is electrically connected to the micro-light source 200 which is electrically connectable to the bundle conductor 181. The plates 198a, 198b, and 198d are each made of a conducting material and each connectable to the bundle conductor 181. The plates 198a-198d are shaped and sized so that the casing protects at least the microlight source from precipitation such as rain, snow, and/or the like. The curved plate 198a is provided with rounded ends which are each adjacent to a respective side plate 198b, 198c. The rounded ends are each inwardly curved so that any precipitation received by the top plate 198a flows away from the side plates 198b and 198c and no electrical contact be created between the top plate 198a and the side plates 198b and 198c. The bottom plate 198d is also provided with rounded or curved ends to protect the interior of the casing.

[00107] The side plate 198c which is electrically connected to the micro-light source 200 is oriented so as to be substantially orthogonal to the axis that passes by the bundle conductors 179 and 180 in order to be sensitive to these two bundle conductors. The plates 198a-198d are connected together using a non-conducting or electrically insulating material to ensure that the light signal emitted by the micro-light source 200 comes only from the movement of surface charges between the bundle conductor 181 and the plate 198c. Furthermore, electrically connecting all of the plates 198a-198d to the bundle conductor 181 ensures that substantially no electric discharge will occur between the plates 198a-198d.

[00108] The micro-light sources 190, 194, 196, and 200 are each optically connected to a read-out module via at least one optical fiber. The read-out module is adapted to determine the voltage of the bundle conductors 179, 180, and 181 using the light signals received from the micro-light sources 190, 194, 196, and 200 using the same method as described above with respect to the read-out module described in connection with Figure 5.

[00109] While the voltage sensing systems 150 and 178 are installed on the bundle conductors of a power line, Figure 7 illustrates one embodiment of a voltage sensing system 210 to be installed on two ground conductors 212 and 214 of a power line in order to determine the voltage in the three bundle conductors 216, 218, 220 of the power line. While they are positioned on top of the three bundle conductors 216, 218, and 220, it should be understood that the two ground conductors 212 and 214 may be positioned below the three bundle conductors 216, 218, and 220. The ground conductor 212 is located between the bundle conductors 216 and 218 while the ground conductor 214 is located between the bundle conductors 218 and 220.

[00110] The voltage sensing system 210 comprises two voltage sensors 222 and 224. Each voltage sensor 222, 224 comprises a casing in which two micro-light sources are enclosed and at least one optical waveguide for collecting and guiding the light emitted by the micro-light sources. Each casing comprises four elongated plates which are disposed so as to enclose a respective ground conductor 212, 214.

[00111] The voltage sensor 222 comprises a casing formed of a curved top plate 226a, two side plates 226b and 226c, and a bottom rounded plate 226d. The side plate 226b is made of a conducting material and is electrically connected to the micro-light source 228 which is electrically connectable to the bundle conductor 212. The side plate 226c is made of a conducting material and is electrically connected to the micro-light source 230 which is electrically connectable to the ground conductor 212. The plates 226a and 226d are each made of a conducting material and each connectable to the ground conductor 212. The plates 226a-226d are shaped and sized so that the casing protects at least the microlight sources 228 and 230 from precipitation such as rain, snow, and/or the like. The curved plate 226a is provided with rounded ends which are each adjacent to a respective side plate 226b, 226c. The rounded ends are each inwardly curved so that any precipitation received by the top plate 226a flows away from the side plates 226b and 226c and no electrical contact be created between the top plate 226a and the side plates 226b and 226c.

[00112] The side plate 226b which is electrically connected to the micro-light source 228 is oriented so as to be more sensitive to the electric fields generated by the bundle conductors 218 and 220. The side plate 226c which is electrically connected to the micro-light source 230 is oriented so as to be more sensitive to the electromagnetic field generated by the bundle conductor 216. The plates 226a-226d are connected together using a non-conducting or electrically insulating material to ensure that the light signal emitted by the micro-light source 228 comes only from the movement of surface charges between the ground conductor 212 and the plate 226b and the light signal emitted by the micro-light source 230 comes only from the movement of surface charges between the ground conductor 212 and the plate 226c. Furthermore, electrically connecting all of the plates 226a-226d to the ground conductor 212 ensures that substantially no electric discharge will occur between the plates 226a-226d. It should be understood that the voltages in the conductors 216, 218 and 220 may be determined from the optical signals emitted from the micro-light sources 228, 230, 234, and 236 since the surface charges present at the surface of the ground conductors 212 and 214 depend on the surface charges present at the surface of the bundle conductors 216, 218, and 220, and the surface charges present at the surface of

the bundle conductors 216, 218, and 220 depend on the voltages in the bundle conductors 216, 218, and 220.

[00113] The voltage sensor 224 comprises a casing formed of a curved top plate 232a, two side plates 232b and 232c, and a bottom rounded plate 232d. The side plate 232b is made of a conducting material and is electrically connected to the micro-light source 234 which is electrically connectable to the bundle conductor 214. The side plate 232c is made of a conducting material and is electrically connected to the micro-light source 236 which is electrically connectable to the ground conductor 214. The plates 232a and 232d are each made of a conducting material and each connectable to the ground conductor 214. The plates 232a-232d are shaped and sized so that the casing protects at least the microlight sources 234 and 236 from precipitation such as rain, snow, and/or the like. The curved plate 232a is provided with rounded ends which are each adjacent to a respective side plate 232b, 232c. The rounded ends are each inwardly curved so that any precipitation received by the top plate 232a flows away from the side plates 232b and 232c and no electrical contact be created between the top plate 232a and the side plates 232b and 232c.

[00114] The side plate 232b which is electrically connected to the micro-light source 234 is oriented so as to be sensitive to the electric field generated by the bundle conductor 220. The side plate 232c which is electrically connected to the micro-light source 236 is oriented so as to be sensitive to the electric fields generated by the bundle conductors 216 and 218. The plates 232a-232d are connected together using a non-conducting or electrically insulating material to ensure that the light signal emitted by the micro-light source 234 comes only from the movement of surface charges between the ground conductor 214 and the plate 232b and the light signal emitted by the micro-light source 236 comes only from the movement of surface charges between the ground conductor 214 and the plate 232c. Furthermore, electrically connecting all of the plates 232a-232d to the ground conductor 214 ensures that substantially no electric discharge will occur between the plates 232a-232d.

[00115] In one embodiment, the voltage sensing system 210 may be used when the electric fields generated by the bundle conductors 216, 218, and 220 are strong, e.g. for voltages in the range of hundreds of kV.

[00116] In an embodiment in which a power line comprises more than two ground conductors, the voltage sensing system 210 may be preferably installed on the ground conductors that are closest to the bundle conductors.

[00117] While in the above description it is secured to a ground conductor such as the ground conductor 212, it should be understood that the voltage sensing system 210 may be secured to any other adequate conducting and grounded structure having an electrical charge generated by a conductor in which an electrical current flows, such as conductor 216. For example, the voltage sensing system 210 could be secured to the transmission tower on which the conductors are mounted.

[00118] Figure 8 illustrates experiment results and presents the optical signal detected by a read-out module and the determined voltage as a function of time. In the experiment, the voltage sensing unit comprised two micro-LED sources, each for a respective polarity of the AC current propagating in an electrical conductor. The curve 250 represents the temporal shape of a 14 kV rms voltage (60 Hz). The curve 252 represents the amplitude of the light emitted by the first micro-LED source and detected by the read-out module and the curve 254 represents the amplitude of the light emitted by the second micro-LED source and detected by the read-out module. The curves 252 and 254 form together the optical response.

[00119] Since the voltage detection is based on a movement of surface charges towards the surface of the conductor, the withdrawn current follows the variation of the temporal derivative of the voltage signal. This explains the shift of one cycle quarter between the optical response and the voltage. Furthermore, the optical response is slightly deformed when it passes through zero due to the non-linearity of the micro-LED. The impact of the non-linearity of the micro-LED may be corrected by the read-out module.

[00120] In one embodiment, the above-described voltage sensor and voltage sensing system form a Faraday cage to be installed around an electrical wire of which the voltage is to be determined. Once installed, the voltage sensor and the electrical wire form together an "enlarged" conductor. The light source may then be powered by the movement of charges towards the surface of the Faraday cage. Since the enlarged conductor forms a Faraday cage, any residual charges of the electrical wire move towards the external wall of the Faraday cage.

[00121] In one embodiment, increasing the surface area of the electrically-conducting device allows reducing the Corona effect, and therefore reducing the aging of the components and signal disturbance.

[00122] In one embodiment, even with a strong movement of charges, the current generated can be quite weak (a few μA). With prior art systems, in order to measure such a weak current in proximity to power lines, relatively effective electromagnetic insulation would have to be installed all along the current's path or amplification would be required at the sensor level to transmit an electrical or optical signal which would be sufficiently strong. To significantly reduce the need for electromagnetic insulation, a micro-light source is placed directly at the measurement point, thus converting the weak electrical signal to a weak light signal. An electrically-conducting device along with a micro-light source constitutes the sensor. An optical fiber is used to transmit the light signal. A read-out module situated at a distance is used to receive, process and communicate information on the amplitude and phase of the voltage being measured. Only the sensor requires a substantial amount of electromagnetic insulation, because once the electrical signal is converted into a light signal, it is no longer susceptible to electromagnetic interference. The read-out module may be located a few dozen meters away, in an area where it is practical to convert the light signal into any other type of signal that can be transmitted over a longer distance. Optical, electrical or radio signals can be used, for example, and they can be analog or digital.

[00123] The embodiments described above are intended to be exemplary only. The scope of the invention is therefore intended to be limited solely by the appended claims.

CLAIMS:

1. A voltage sensor for obtaining a light signal representative of an AC voltage in an electrical conductor, comprising:

a conducting device adapted to be placed adjacent and spaced apart from the electrical conductor;

a light source for emitting the light signal, the light source having a first electrical terminal and a second electrical terminal for powering the light source, the first electrical terminal being electrically connectable to a surface of the electrical conductor and the second terminal being electrically connected to the conducting device for extracting surface electric charges from the electrical conductor towards the conducting device when the first electrical terminal is connected to the surface of the electrical conductor, and thereby powering the light source, an intensity of the light signal being indicative of a value of the AC voltage in the electrical conductor; and

an optical waveguide operatively coupled to the light source for collecting and propagating over a distance at least a portion of the light signal emitted by the light source.

2. The voltage sensor of claim 1, wherein the conducting device comprises a conducting plate extending along a given section of the electrical conductor.

3. The voltage sensor of claim 1, wherein the conducting device comprises a conducting cylinder to be positioned around a given section of the electrical conductor, the conducting cylinder being spaced apart from the electrical conductor.

4. The voltage sensor of claim 3, further comprising two circular and dielectric plates, each positioned at a respective end of the conducting cylinder.

5. The voltage sensor of claim 3, further comprising a cylindrical connector adapted to be positioned around and in physical contact with the electrical conductor and electrically

connected to the first terminal of the light source for connecting the light source to the electrical conductor.

6. The voltage sensor of claim 5, wherein the conducting cylinder comprises two first hemi-cylindrical plates hingedly connected together and the cylindrical connector comprises two second hemi-cylindrical plates.

7. The voltage sensor of claim 6, wherein the light source is electrically connected to a given one of the two first hemi-cylindrical plates and to a given one of the two second hemi-cylindrical plates.

8. The voltage sensor of claim 1, further comprising a body enclosing the conducting device, the light source, and a portion of the optical waveguide, the body being designed and shaped to mate with the electrical conductor in order to be secured thereto.

9. The voltage sensor of claim 8, wherein the body is made of a dielectric material.

10. The voltage sensor of claim 1, wherein the light source comprises a micro-light source.

11. The voltage sensor of claim 10, wherein the micro-light source comprises a micro Light Emitting Diode (LED).

12. The voltage sensor of claim 1, further comprising a return path circuit electrically connected to the light source.

13. The voltage sensor of claim 12, wherein the return path circuit comprises at least one of a resistor, a capacitor and a diode.

14. The voltage sensor of claim 12, wherein the return path circuit comprises a further light source.

15. The voltage sensor of claim 14, wherein the further light source is optically connected to the optical waveguide.

16. The voltage sensor of claim 1, wherein the optical waveguide comprises an optical fiber.

17. The voltage sensor of claim 1, wherein the conducting device comprises a first conducting plate and at least one second conducting plate, the first conducting plate and the at least one second conducting plate being secured together so as to surround the electrical conductor, the first conducting plate being connected to the second electrical terminal of the light source.

18. The voltage sensor of claim 17, wherein the at least one second conducting plate is connectable to the electrical conductor.

19. The voltage sensor of claim 17, further comprising a further light source having a third electrical terminal and a fourth electrical terminal for powering the further light source, the third electrical terminal being electrically connectable to the electrical conductor and the fourth electrical terminal being electrically connected to a given one of the at least one second conducting plate.

20. The voltage sensor of claim 19, wherein the further light source is operatively coupled to the optical waveguide for propagating over the distance at least a portion of a light signal emitted by the further light source.

21. The voltage sensor of claim 19, further comprising a further optical waveguide optically coupled to the further light source for propagating over a distance at least a portion of a light signal emitted by the further light source.

22. The voltage sensor of claim 19, wherein the first conducting plate and the given one of the at least one second conducting plate face each other when the voltage sensor is secured to the electrical conductor.

23. A method for obtaining a light signal representative of an AC voltage in an electrical conductor, comprising:

placing a conducting device adjacent to the electrical conductor;

electrically connecting a first terminal of a light source to the electrical conductor and a second terminal of the light source to the conducting device thereby extracting surface electric charges from the electrical conductor towards the conducting device and powering the light source,

emitting a light signal from the light source as a result of the powering of the light source, an intensity of the light signal being indicative of a value of the AC voltage in the electrical conductor;

optically coupling at least a portion of the light signal into an optical waveguide; and

propagating the coupled light signal over a distance in the optical waveguide.

24. The method of claim 23, further comprising:

receiving said propagated light signal using a detector;

determining an intensity value for said received light signal using a processor; and

determining a measurement of said AC voltage in the electrical conductor using said determined intensity value using said processor.

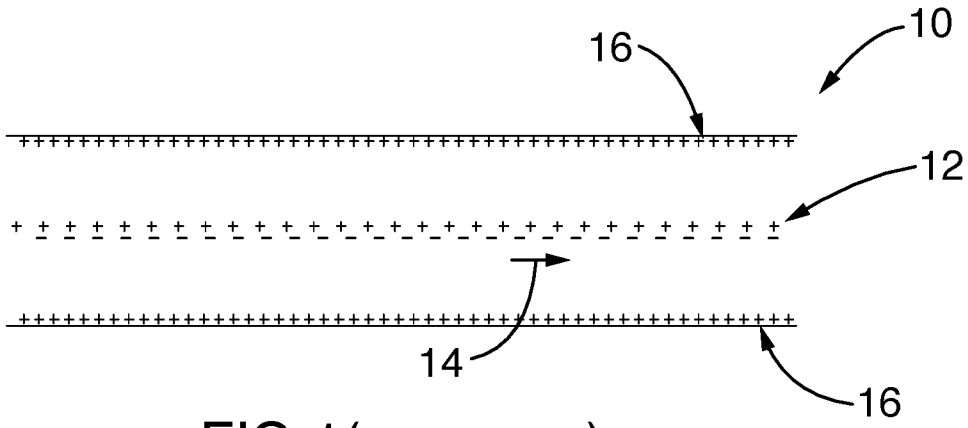

FIG.1(PRIOR ART)

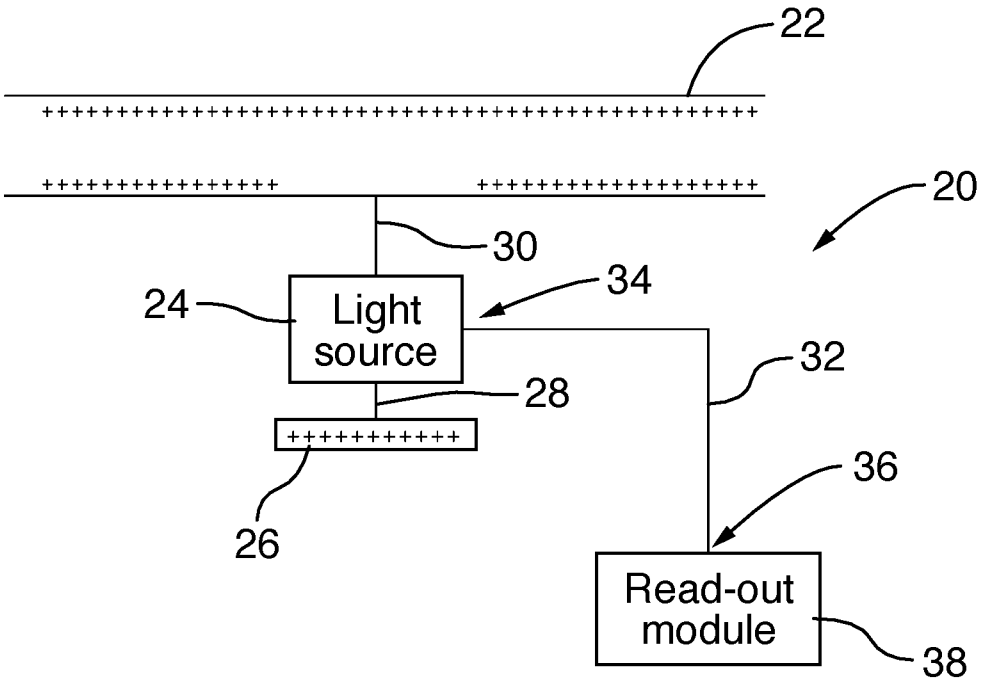

FIG.2

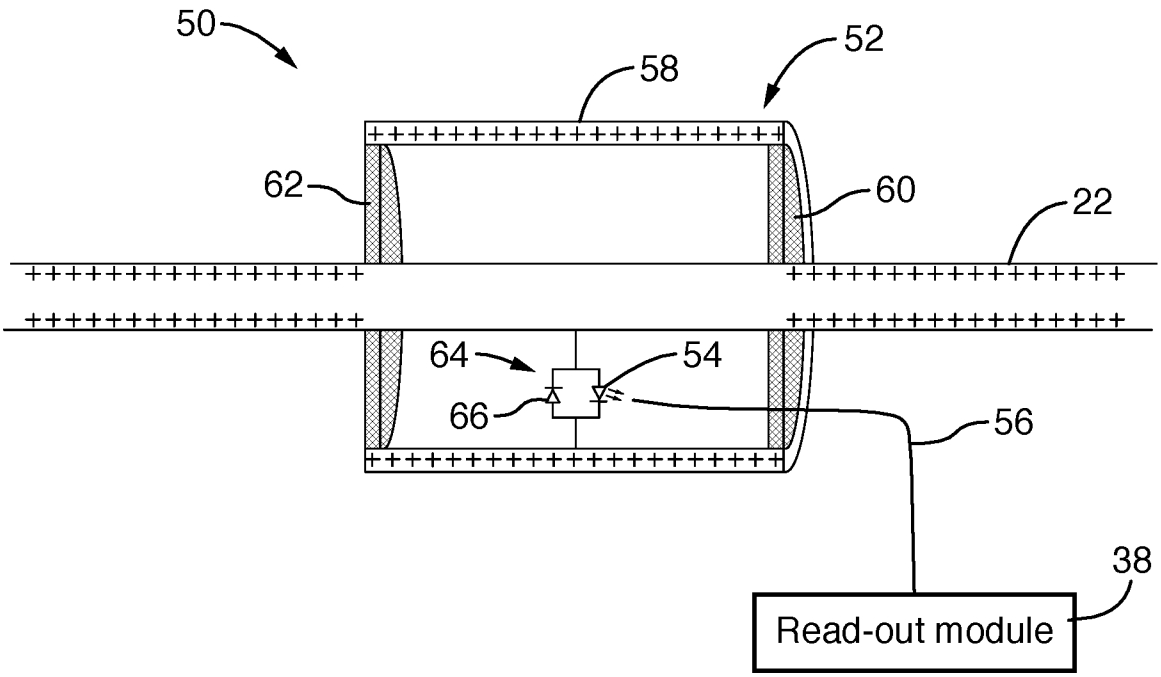

FIG.3

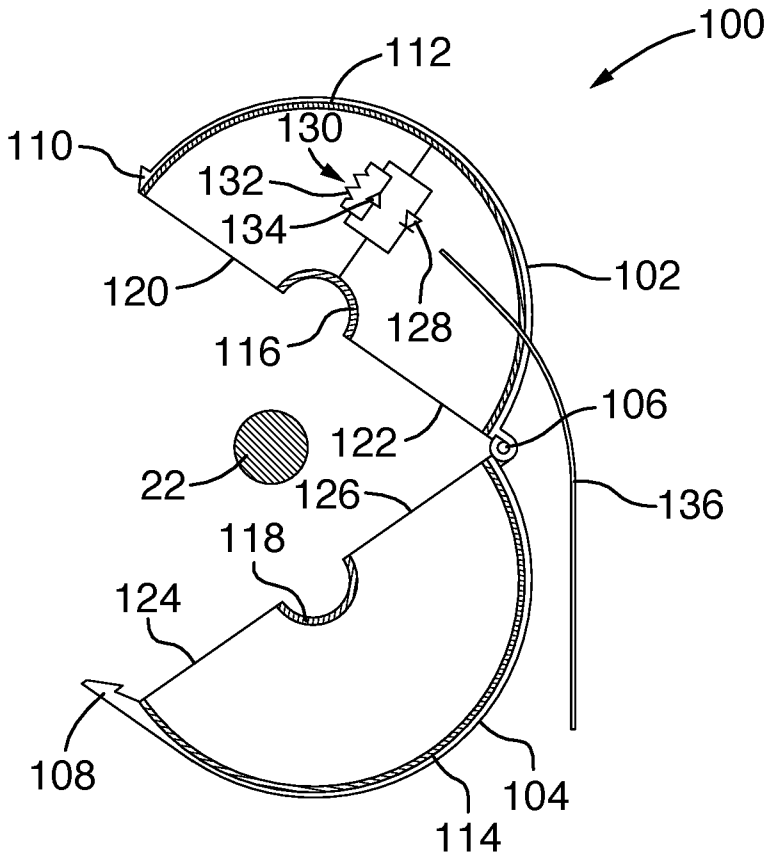
100
112
130
110
132
134
102
120
128
116
106
122
22
136
126
118
124
108
104
114

FIG.4A

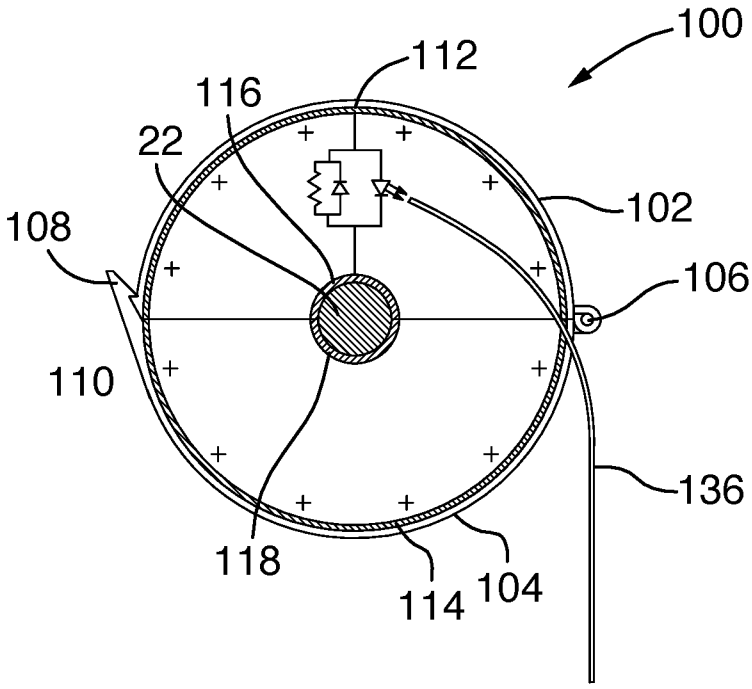
100
112
116
22
102
108
106
110
136
118
114
104

FIG.4B

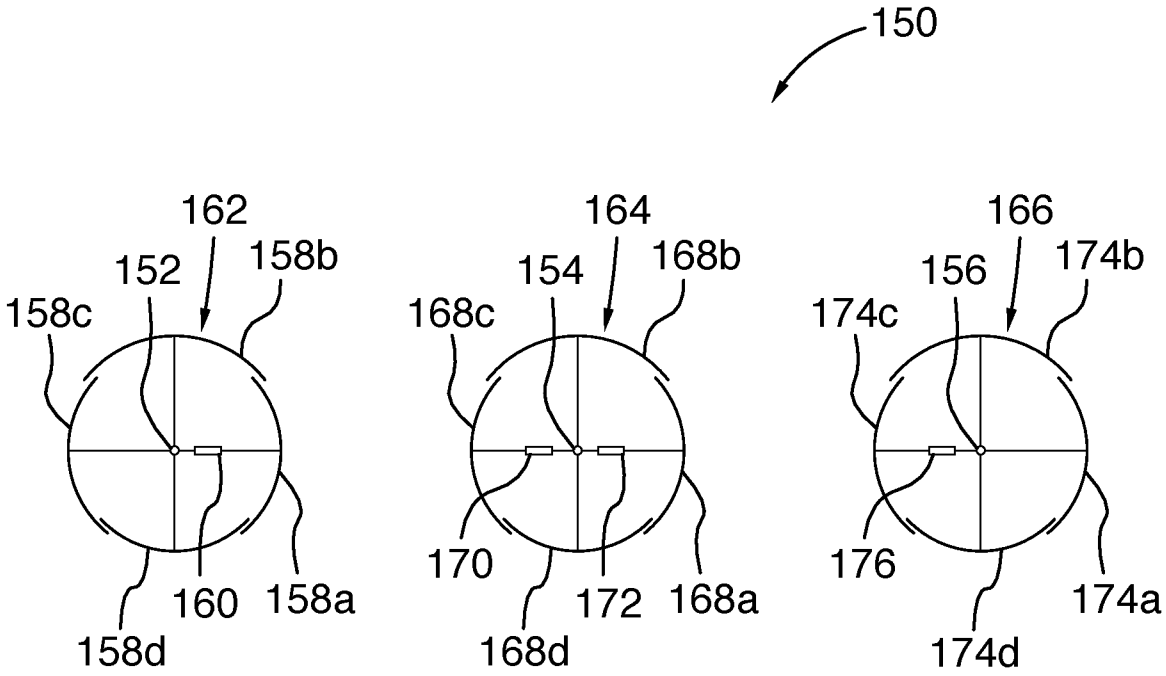
150
162
152
158b
158c
160
158a
158d
164
154
168b
168c
170
172
168a
168d
166
156
174b
174c
176
174a
174d

FIG.5

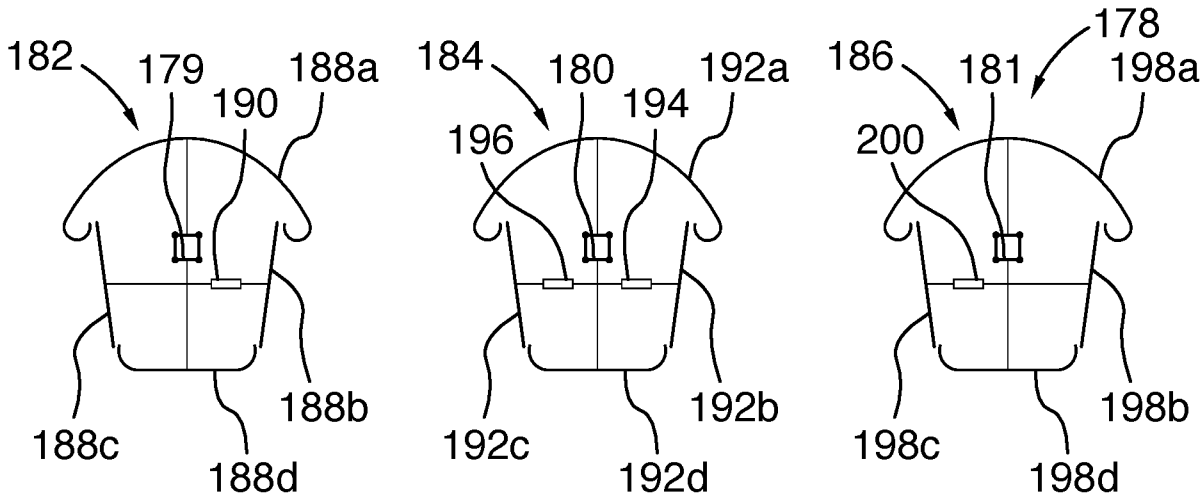
182
179
188a
190
188b
188c
188d
184
180
192a
194
196
192b
192c
192d
186
181
178
198a
200
198b
198c
198d

FIG.6

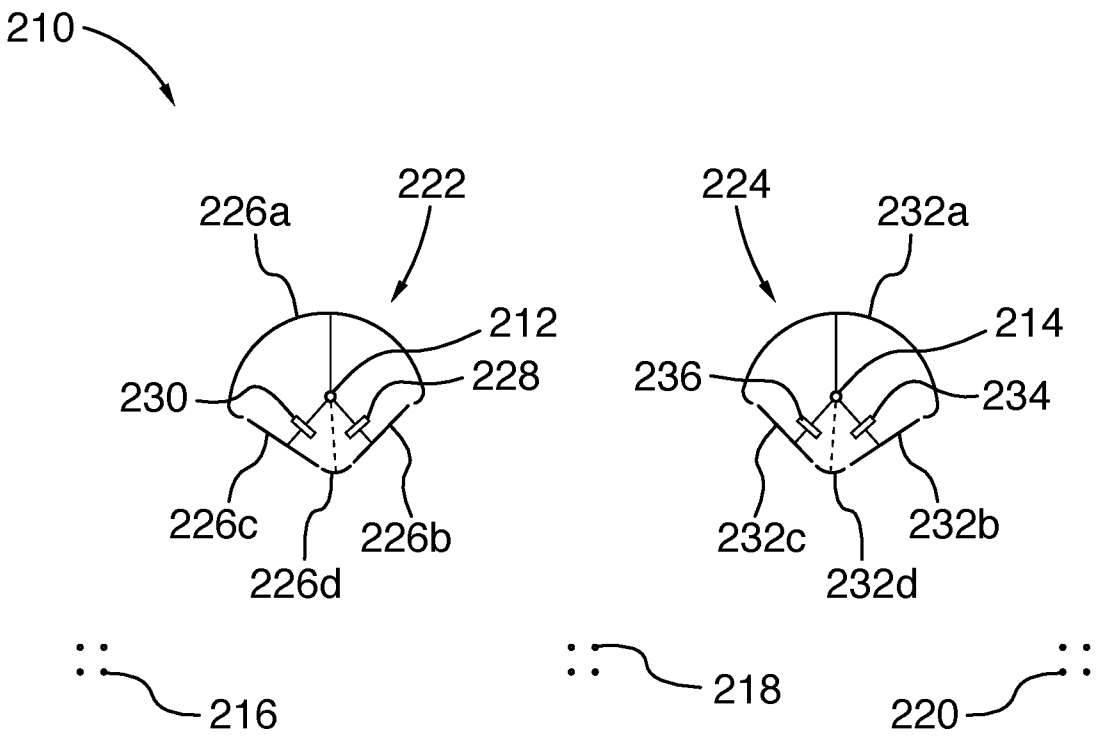
210
222
226a
212
228
230
226c
226b
226d
216
224
232a
214
236
234
232c
232b
232d
218
220

FIG.7

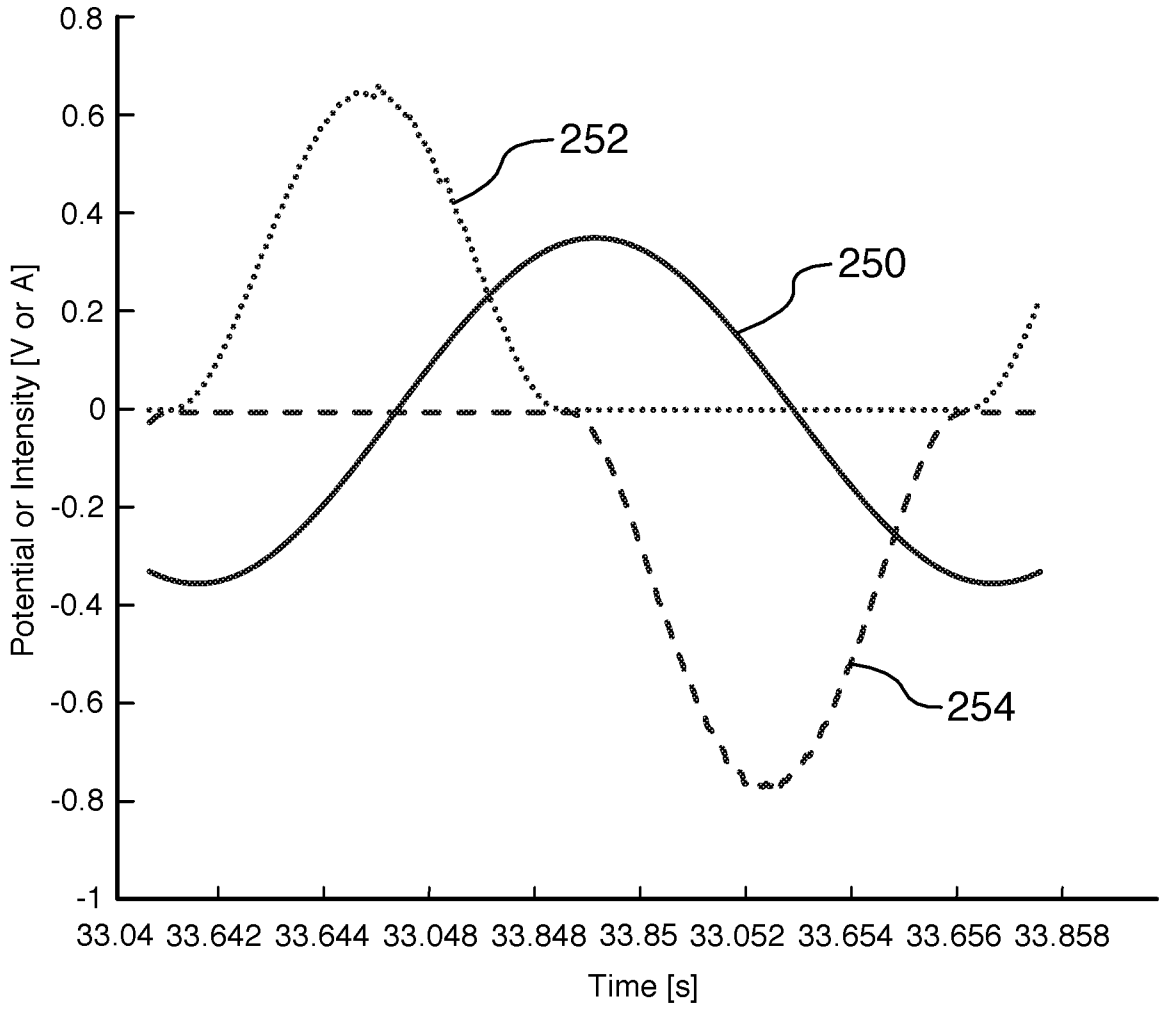
0.8
0.6
0.4
0.2
0
-0.2
-0.4
-0.6
-0.8
-1
Potential or Intensity [V or A]
252
250
254
33.04 33.642 33.644 33.048 33.848 33.85 33.052 33.654 33.656 33.858
Time [s]

FIG.8

INTERNATIONAL SEARCH REPORT

International application No.
PCT/IB2016/052518

A. CLASSIFICATION OF SUBJECT MATTER
IPC: ***G01R 19/00*** (2006.01)

According to International Patent Classification (IPC) or to both national classification and IPC

B. FIELDS SEARCHED

Minimum documentation searched (classification system followed by classification symbols)
IPC: G01R 19/00 (2006.01), G01R 15/22 (2006.01), G02F 1/09 (2006.01)

Documentation searched other than minimum documentation to the extent that such documents are included in the fields searched

Electronic database(s) consulted during the international search (name of database(s) and, where practicable, search terms used)
Canadian database, IEEE, Internet search engine – Keywords: voltage, sensor, optical, alternating, current, light source, conducting device, electrical wire, light signal, measured optical, amplitude, electrical conductor, optical power, intensity, led.

C. DOCUMENTS CONSIDERED TO BE RELEVANT

Category*	Citation of document, with indication, where appropriate, of the relevant passages	Relevant to claim No.
X	US 9,297,837 (INSTITUT NATIONAL D'OPTIQUE) 29 March 2016 (29.03.2016) Abstract, see whole document	1 to 24
A	US 7,057,792 (OKI ELECTRIC INDUSTRY CO.) 06 June 2006 (06.06.2006) Abstract, figure 7	1 to 24

☐ Further documents are listed in the continuation of Box C.

☑ See patent family annex.

*	Special categories of cited documents:	"T"	later document published after the international filing date or priority date and not in conflict with the application but cited to understand the principle or theory underlying the invention
"A"	document defining the general state of the art which is not considered to be of particular relevance	"X"	document of particular relevance; the claimed invention cannot be considered novel or cannot be considered to involve an inventive step when the document is taken alone
"E"	earlier application or patent but published on or after the international filing date	"Y"	document of particular relevance; the claimed invention cannot be considered to involve an inventive step when the document is combined with one or more other such documents, such combination being obvious to a person skilled in the art
"L"	document which may throw doubts on priority claim(s) or which is cited to establish the publication date of another citation or other special reason (as specified)	"&"	document member of the same patent family
"O"	document referring to an oral disclosure, use, exhibition or other means		
"P"	document published prior to the international filing date but later than		

Date of the actual completion of the international search 05 October 2016 (05.10.2016)	Date of mailing of the international search report 18 October 2016 (18-10-2016)
Name and mailing address of the ISA/CA Canadian Intellectual Property Office Place du Portage I, C114 - 1st Floor, Box PCT 50 Victoria Street Gatineau, Quebec K1A 0C9 Facsimile No.: 819-953-2476	Authorized officer Gilbert Jean (819) 934-5148

INTERNATIONAL SEARCH REPORT
Information on patent family members

International application No.
PCT/IB2016/052518

Patent Document Cited in Search Report	Publication Date	Patent Family Member(s)	Publication Date
US9297837B2	29 March 2016 (29-03-2016)	US2013293218A1	07 November 2013 (07-11-2013)
		CA2814526A1	03 November 2013 (03-11-2013)
US7057792B2	06 June 2006 (06-06-2006)	US2004041083A1	04 March 2004 (04-03-2004)
		JP2004093257A	25 March 2004 (25-03-2004)