June 8, 1965 J. J. ANDERSON 3,187,963

AEROSOL VALVE WITH MEANS TO LOCK SAME IN THE OPEN POSITION

Filed March 27, 1963 3 Sheets-Sheet 1

Fig. 1.

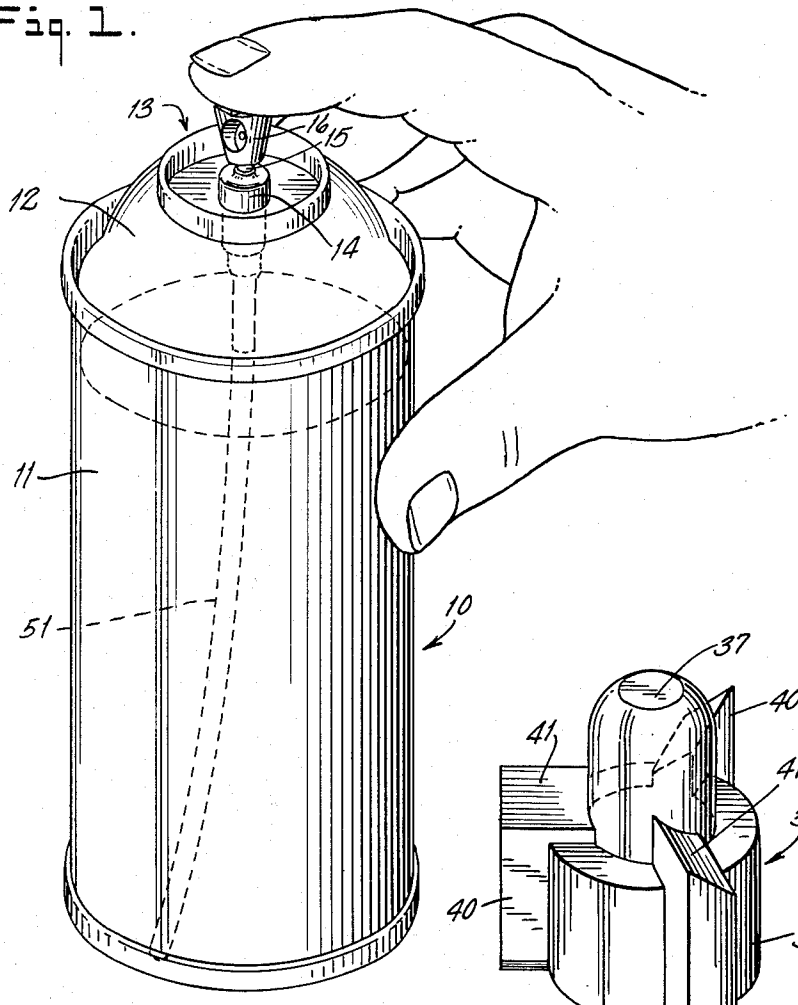

Fig. 6.

INVENTOR.
JOHN J. ANDERSON

June 8, 1965 J. J. ANDERSON 3,187,963

AEROSOL VALVE WITH MEANS TO LOCK SAME IN THE OPEN POSITION

Filed March 27, 1963 3 Sheets-Sheet 2

Fig. 2.

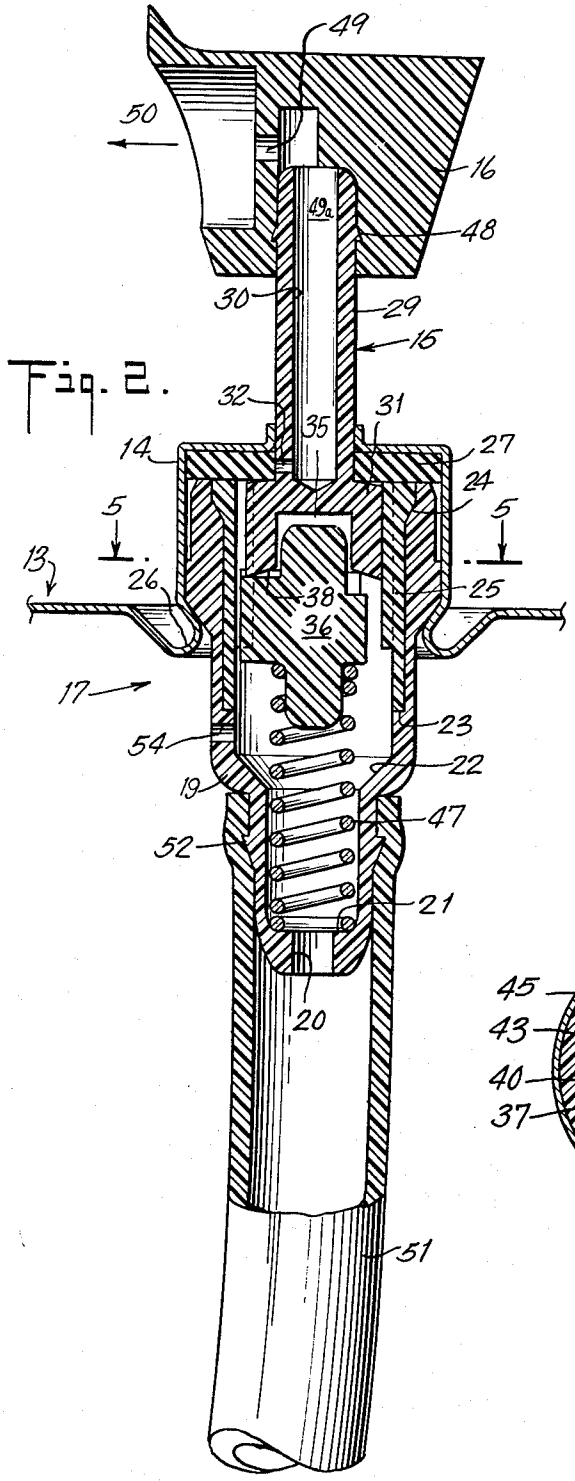

Fig. 4

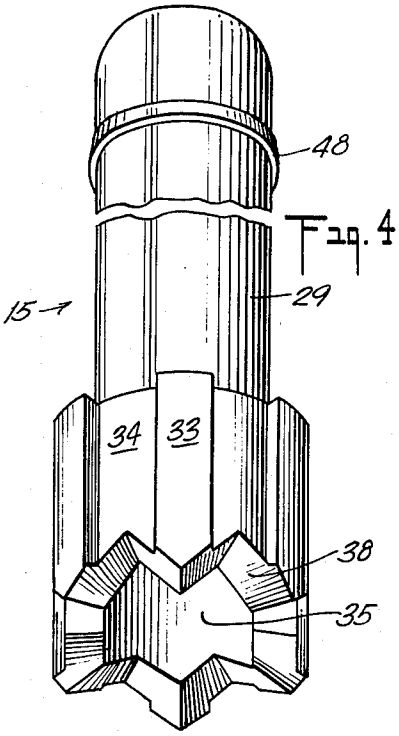

Fig. 5.

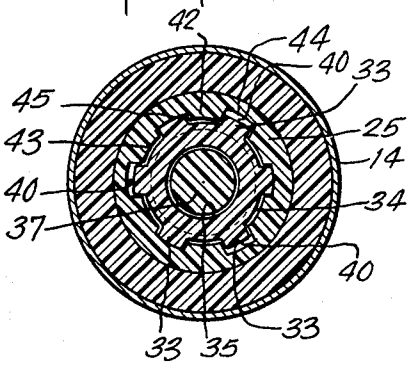

INVENTOR.
JOHN J. ANDERSON

June 8, 1965 J. J. ANDERSON 3,187,963

AEROSOL VALVE WITH MEANS TO LOCK SAME IN THE OPEN POSITION

Filed March 27, 1963 3 Sheets-Sheet 3

Fig. 3.

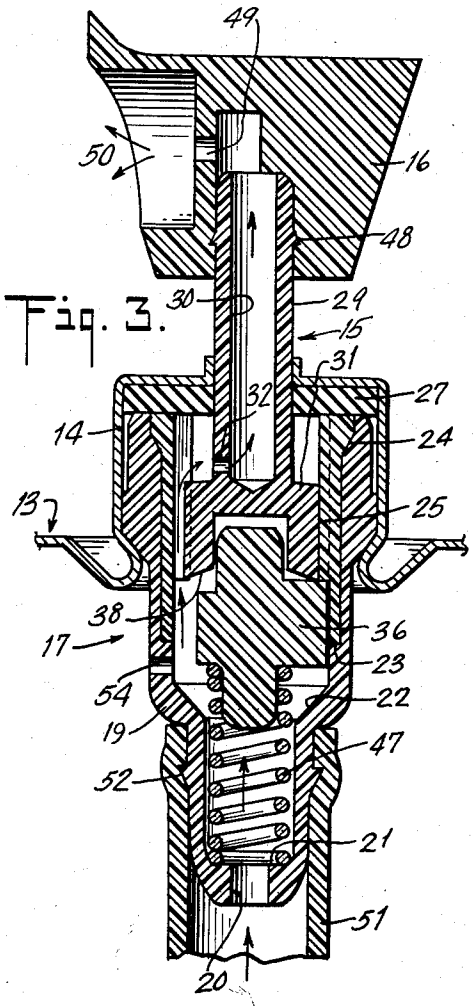

Fig. 7.

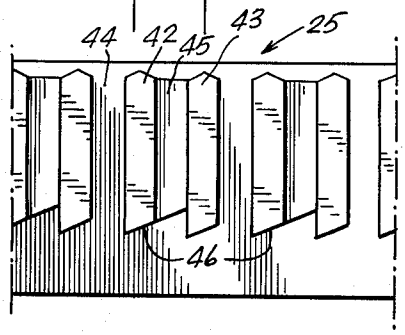

Fig. 8.

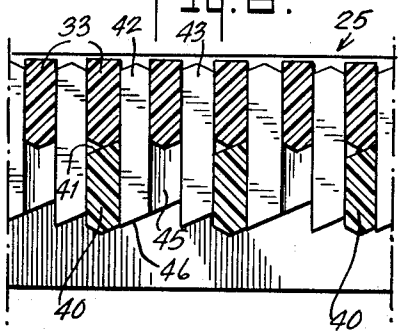

Fig. 9.

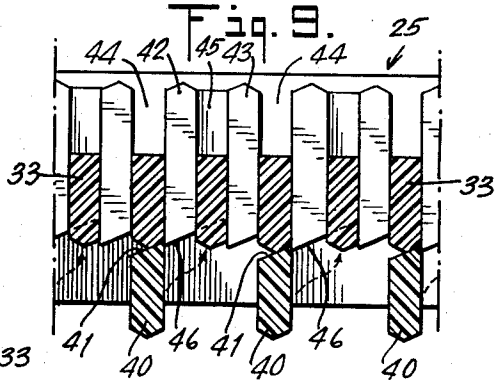

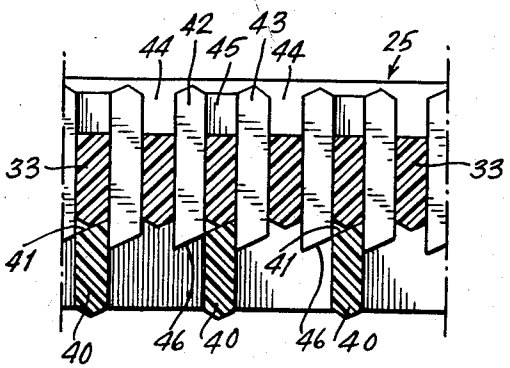

Fig. 10.

INVENTOR.
JOHN J. ANDERSON

United States Patent Office

3,187,963

Patented June 8, 1965

3,187,963

AEROSOL VALVE WITH MEANS TO LOCK SAME IN THE OPEN POSITION

John J. Anderson, Kenosha, Wis., assignor to S. C. Johnson & Son, Inc., Racine, Wis.

Filed Mar. 27, 1963, Ser. No. 268,260
11 Claims. (Cl. 222—394)

This invention relates to pressurized packages, and more particularly, to such packages of the class including a container for a fluid composition and a pressurized propellant for effecting discharge of the fluid from the container.

Heretofore, it has been known to utilize a compressed gas or low boiling liquid for dispensing an active composition from a container in the form of an aerosol, for example. Such containers are generally equipped with dispensing assemblies operated by manual push-down buttons which actuate means for venting the container contents for so long as the button is held manually in depressed position against the force of a spring. Upon release of the button, the spring serves to close the vent and prevent further release of the active composition. It will be appreciated that such packages are inherently disadvantageous where it is necessary to discharge malodorous or toxic ingredients, such as insecticides and the like, for prolonged periods and in confined areas. Thus, according to known constructions the operator is required to be present in the immediate vicinity of the discharge and may be adversely affected by contact or inhalation of the active composition.

Accordingly, I have conceived by my invention a novel pressurized package of the class described that enables me to discharge the active composition in the known manner, or to lock the venting means in open or discharge position so that prolonged discharges may occur without the need of continuous manual pressure, and therefore without the continuous presence of the operator.

The present invention contemplates the provision of a package comprising a container with fluid composition therein and a propellant for discharging the composition from the container, and a novel dispensing assembly mounted in the container, preferably at its top. Actually, the dispensing assembly comprises a body, means effecting communication between the interior of the body and the fluid composition which may for example occupy the lower interior of the container, a discharge control member movable relatively to the body and formed with a bore open to atmosphere and adapted to communicate with the interior of the body, means closing the bore when the member is in a first position and unclosing the bore when the member is in a second position relatively to the body thus to provide a continuous passage for discharge of the fluid composition from the container under the influence of the propellant. Spring means urge the control member towards the first or closed position, and we provide means effective upon shifting of the control member towards the second position, as by manual movement thereof, to render the spring means ineffective to urge the control member to the first or closed position. In accordance with the present concept, means are also provided which are effective upon further movement of the control member towards the second position to render the spring means effective to shift the control means to the first position at which the bore is closed.

Thus, it will be seen that manual movement of the control member, which may be accomplished by depressing a push button, serves at once to open the bore to permit dispensing of the active ingredient from the container, and also to render the spring means ineffective to close the bore, while a subsequent movement of the control member in the same direction renders the spring effective to close the bore. However, I arrange the various parts so that during the initial movement the bore is uncovered before the spring is renedered ineffective, so that for short discharges the control member need not be locked in the second or open position.

The body of the dispensing assembly is preferably tubular and the control member is telescopically movable in relation to the body, the spring means being also positioned within the body to urge the control member to protracted position at which the control member bore, through which discharge takes place, is conveniently closed.

As a particular feature of the invention, I position an indexing member in the tubular body and between the spring and control member so that the indexing member reciprocates with the axial telescoping movements of the control member. Adjacent surfaces of these members are so constructed that upon each movement of the control member to retracted position, the indexing member is caused to index or shift annularly a selected distance.

In order to assure stability of movement of the control and indexing members, I utilize guide means associated with the interior of the body and constructed to engage cooperating parts of the control and indexing members during reciprocating movement of these members. Thus, I prefer to provide a series of lands and grooves on the interior body wall and form the control and indexing members with radially extending fins that slide respectively in certain of the grooves. Actually, the grooves are alternately deep and shallow, the indexing member fins sliding in the deep grooves while those on the control member may extend into both the deep and shallow grooves for sliding movement therein. These parts are so related that during retracting movement the control member may move the indexing member fins axially out of their respective grooves so that the indexing member is free to index or shift annularly as has already been mentioned. This indexing movement is such that the indexing member fins are positioned beneath the lowermost or bottom surface formed by the shallow grooves which then serve as abutments to restrain the indexing member, and thus the control member, against axial movement to protracted position under the influence of the spring means. The control member bore is therefore retained open and in communication with the interior of the body and with the atmosphere. Subsequent movement of the control member and the indexing member towards retracted position causes further indexing of the latter in the manner already mentioned, but this indexing movement positions the indexing member fins for entry into the deep grooves, wherefore the control and indexing members may be returned by the spring means to protracted position.

There has thus been outlined rather broadly the more important features of the present invention in order that a detailed description thereof that follows may be better understood and in order that the present contribution to the art may be better appreciated. There are, of course, additional features of the invention that will be described hereafter and which will form the subject of claims appended hereto. Those persons skilled in the art will appreciate that the conception on which the present disclosure is based may readily be utilized as the basis for designing other structures for carrying out the several purposes of this invention. It is important, therefore, that the claims be regarded as including such equivalent constructions as do not depart from the concept and scope of this invention.

A specific embodiment of the invention has been chosen for purposes of illustration and description, and is shown

in the accompanying drawings, forming a part of the specification wherein:

FIG. 1 is a perspective view of a package according to the present invention and illustrating its manner of use;

FIG. 2 is a vertical sectional view of the dispensing assembly illustrating the control member in protracted position;

FIG. 3 is a view similar to FIG. 2 but illustrating the control member locked in retracted position with discharge taking place;

FIG. 4 is an enlarged perspective view of the control member;

FIG. 5 is a cross-sectional view taken along the line 5—5 of FIG. 2;

FIG. 6 is an enlarged perspective view of the indexing member;

FIG. 7 is a developed view of the guide means;

FIG. 8 is a view similar to FIG. 7, but illustrating the relationship of the indexing member and control member fins to the lands and grooves of the guide means when the dispensing assembly is in protracted or closed position;

FIG. 9 is a view similar to FIG. 8, but illustrating the same parts in dispensing position and moving towards fully retracted position; and

FIG. 10 is a view similar to FIGS. 8 and 9 but showing the parts locked in retracted position.

Referring now to the drawings, and more particularly to FIG. 1 thereof, there is shown a pressure package **10** constructed according to the present concept and comprising a sealed container **11** of conventional design adapted to withstand internal pressures required for present purposes, such pressures being of the order of 75 p.s.i.g., for example, the top **12** of the container may be domed as shown and arranged to support a mounting cup **13** for the dispensing assembly to be later described. For the present, it is sufficient to note that the cup has a central boss **14** and that the assembly includes a control member **15** that extends through this boss and carries the push button **16** which may be conveniently depressed in the manner illustrated.

Turning now to FIG. 2, the dispensing assembly indicated generally by the numeral **17** is shown as including a tubular body **19** open at its upper end and formed with a bore **20** at its lower end. This bore **20** is reduced to provide a circular internal shoulder **21**, for a purpose later to be described, and the interior of the body is gradually enlarged at **22**. In the embodiment shown, the upper interior of the body is stepped to form shoulders **23** and **24** against which is positioned an annular guide member **25**, the structural details of which will be subsequently made clear, but it will now be appreciated that the body may have these structural details formed integral therewith, if desired.

The body is sealed within the cup **13** by crimping the latter around an external shoulder of the body as shown at **26**, and a resilient sealing gasket **27** is positioned between the top of the body and the top of the central boss **14** of the mounting cup **13**.

The dispensing assembly also includes the control member **15** which preferably takes the form of a stem **29** axially bored from the top as at **30** and having an enlarged base **31** positioned within the body **19** and serving to close the bottom of the bore **30**. A relatively small radial bore **32** communicates with the lower part of the bore **30** and is normally closed by the gasket **27**, as shown in FIG. 2.

Referring now to FIGS. 2 and 4, it will be seen that the base **31** of the stem **29** is formed with a series of alternate vertical fins and grooves **33**, **34** respectively, six of each being shown for purposes of illustration, and with a central recess **35**. The lower annular surface **38** of the base **31** is serrated with the lower apices of the serrations occurring at the center of the fins while the upper apices occur at the center of the grooves, as clearly shown in FIG. 4; and the entire serrated surface is inclined upwardly and inwardly, as best shown in FIG. 2.

I also position within the body **19** an indexing member **36**, best shown in FIGS. 2, 3 and 6, and I prefer that this member be formed with an elongated body **37**, an enlarged central zone **39** and a series of radially extending vertical fins **40** equally spaced circumferentially, the present embodiment illustrating three such fins. These fins **40** extend beyond the enlarged zone of the body in both directions and the upper ends thereof are inclined as at **41**, each in the same annular direction.

It will be recalled that the upper interior of the body **19** has either provision for reception of the guide member **25** or has this member formed integrally with the body itself. In any case, reference to FIGS. 5 and 7 to 10 will demonstrate that this member has a series of spaced, vertical inwardly extending alternate lands **42** and **43**, preferably three each in number. Between each pair of lands is formed a groove; but the grooves are alternately deep grooves **44** and shallow grooves **45**. The lower ends of the lands and shallow grooves projecting inwardly relatively to the deep grooves, provide outstanding shoulders **46** that are preferably coplanar and which I prefer to incline, as shown.

Referring again to FIGS. 2 and 3, it will be seen that in assembling the parts that have been described thus far, a helical compression spring **47** is positioned within the body **19** to stand upon the shoulder **21**. The guide member **25** is inserted into the upper end of the body in a friction fit, to bear upon the shoulders **23** and **24** unless, of course, the lands **42** and **43** and grooves **44** and **45** are formed integral with the body. The indexing member **36** is oriented with the inclined surfaces **41** uppermost and is set upon the upper end of the spring **47** with the lower end of the body **37** extending down within the uppermost coils of the spring and with the enlarged central zone **39** bearing against the top coil. The fins **40** are disposed each within a deep groove **44** of the guide member. It is important here to note that the grooves **45** are not deep enough to accommodate the fins **40** in the indexing member **36**.

Meanwhile, the stem of the control member **15** is inserted through the sealing gasket **27** and the central opening in the boss **14** which is then crimped around the exterior of the body **19** as already mentioned and conveniently sealed to the container dome. It will be observed that the recess **35** of the control member base **31** receives the upper end of the indexing member body **37**. Additionally, the fins **33** of the control member base are positioned one each in the six grooves **44** and **45** of the guide member **25** for sliding movement of the control member **15** vertically relatively to the guide member.

A push button **16** is frictionally inserted on the upper end of the stem **29** which is formed with a sharp annular ridge **48** that serves to prevent removal of the button from the stem. The push button shown has a lateral atomizing bore **49** that communicates with the bore **30** to direct the flow of the discharge in the direction of the arrow **50**. Actually, the bore in the button **16** is formed with a shoulder **49***a* which acts as a stop for the stem **29**, the bore in the button being more or less D-shaped in cross section at this point.

To permit discharge of the active ingredient from the container, an eduction tube **51** embraces the lower part of the body **19**, which may have an annular shoulder **52** for assuring a tight fit, and the tube extends down to the region normally occupied by the active composition such as the lower part of the container, for example.

Discharge may be facilitated by provision of a small bore or vapor tap **54** which, if utilized may conveniently be positioned in the body **19** above the top of the tube **51** so that portions of the pressurized propellant can flow directly from the upper interior of the container into the body during the flow of active composition therethrough.

In the position of the parts shown in FIGS. 2 and 8, the bore **32** near the bottom of the stem **29** is closed by the gasket **27** and the fins **33** and **40** of the control and indexing members are disposed in the grooves of the guide member **25** as already described; that is, one of the six fins **33** is positioned in each of the six grooves **44** and **45** (FIG. 5) while one of the three fins **40** is positioned in each of the three deep grooves **44** but below the fins **33**. Upon depression of the button **16** the control member moves axially downwardly urging the indexing member with it against the force of the spring **47**. During this axial movement, the control member fins **33** move downwardly in the grooves **44** and **45** of the guide **25** so as to prevent rotary movement of this member, and the indexing member fins **40** slide in the deep drooves **44** below those fins **33** that are also in the deep grooves.

When the button **16** has been depressed a short distance, the bore **32** will move below the gasket **27** and the pressurized propellant in the upper interior of the container will drive the active composition upwardly through the tube **51** and bore **20** into the body **19**, around the indexing member **36** and control member base **31** into lateral bore **32**, upwardly through axial bore **30** and through atomizing bore **49** to discharge. If the button **16** is then released, the parts will return to their normal positions under the force of the spring and discharge will cease.

At this point, it is important to realize that because of the serrations formed on the lower annular surface **38** of the control member base **31**, as well as the upward and inward inclination thereof, as shown in FIGS. 2, 3 and 8, the control member bears against the indexing member surfaces **41** with a minimum total area of contact thus minmizing the friction between these parts. Additionally, I prefer to form the body **19** and the guide, control and indexing members of a polymer such as nylon or a polyolefin such as polyethylene or polypropylene. Such materials are at once non-reactive with the container contents and have a low coefficient of friction.

When it is desired to have continuous discharge without continuous pressure on the push button, the button is simply depressed a greater distance than is necessary merely to unclose the bore **32** so that the indexing member fins **40** are forced out of their respective grooves **44**. At this point, the bearing contact between the control member and the inclined surfaces **41** of the indexing member causes the latter to index or shift annularly to a position beneath the next adjacent shoulders **46** formed conjointly by the lowermost edges of the lands **42** and the next adjacent shallow grooves **45**, and indicated clearly in FIG. 9. These shoulders prevent the spring from effecting return of the indexing and control members to their initial positions so that if manual pressure on the push button **16** is relieved, the lateral bore **32** remains uncovered and discharge continues. Actually, because the shoulders **46** are inclined and are wider than the surfaces **41**, these surfaces slide along the shoulders under the force of the spring until blocked by the next adjacent lands **43** so that the index and control members rise slightly, but not enough to position the bore **32** opposite the sealing gasket **27**.

To return the parts to their original positions, the push button is again depressed to retract the control member and to shift the indexing member axially against the force of the spring **47** until the fins **40** pass the lowermost portions of the guide member lands **43**. The bearing contact between the control member and the inclined surfaces of the indexing member then causes another indexing of the latter to bring the surfaces **41** into engagement with the inclined lower surfaces of the next adjacent lands **43** along which they slide under the influence of the spring **47** until they reach the next adjacent deep grooves **44**, as shown in FIG. 10. By relieving pressure on the push button, the indexing member

is free to move axially upwardly under the spring force, and in so doing pushes the control member along with it so that the bore **32** is again closed by the gasket **27** thus preventing further discharge, and completing a cycle of operation.

From the foregoing description, it will be seen that I have contributed a pressurized package from which a fluid ingredient may be discharged by a pressurized propellant in known manner by continuous manual pressure; or in which the parts may be locked in discharge position for as long as desired and then unlocked and returned to normal position all by the simple depression of a push button.

While the invention has been described in detail with respect to a preferred embodiment thereof, it will be understood by those persons skilled in the art that various modifications may be made without departing from the scope of the invention and it is intended to cover all such changes and modifications in the appended claims.

I claim:

1. A pressurized package of the class including a container, a fluid composition in the container, propellant means also in the container for discharging the composition from the container, and a dispensing assembly mounted in the container and comprising a tubular body, means effecting communication between the interior of said body and the interior of the container, a discharge control member movable axially relatively to said body and formed with a bore open to atmosphere and adapted to communicate with the interior of said body, means closing said bore when said member is in a first position and unclosing said bore when said member is in second position relatively to said body thus to provide a continuous passage for discharge of said fluid composition from the container under the influence of said propellant means, spring means normally urging said member towards said first position, means effective upon movement of said member towards said second position to render said spring means ineffective, and means effective upon further movement of said member in the same direction to render said spring means effective.

2. A pressurized package of the class including a container, a fluid composition in the container, propellant means also in the container for discharging the composition from the container, and a dispensing assembly mounted in the container and comprising a tubular body, means effecting communication between the interior of said body and the interior of the container, a discharge control member movable axially relatively to said body and formed with a bore open to atmosphere and adapted to communicate with the interior of said body, means closing said bore when said member is in a first position and unclosing said bore when said member is in the second position relatively to said body thus to provide a continuous passage for discharge of said fluid composition from the container under the influence of said propellant means, spring means normally urging said discharge control member towards said first position, means within said tubular body movable with said discharge control member towards said second position, and means cooperating with said last named means upon movement thereof to said second position to render said spring means ineffective.

3. A pressurized package of the class including a container, a fluid composition in the container, propellant means also in the container for discharging the composition from the container, and a dispensing assembly mounted in the container and comprising a tubular body, means effecting communication between the interior of said body and the interior of the container, a discharge control member telescopically related to said body and formed with a bore open to atmosphere and adapted to communicate with the interior of said body, means closing said bore when said member is protracted and unclosing said bore when said member is retracted relatively to said body thus to provide a continuous passage for discharge of said fluid composition from the container under

the influence of said propellant means, spring means normally urging said member towards protracted position, an indexing member movable with said control member, cooperating surfaces on said indexing and control members effective to shift said indexing member a selected annular distance upon each movement of said control member towards retracted position, and means within said tubular body cooperating with said indexing members when said indexing member is in selected annular positions while retracted to render said spring means ineffective.

4. A pressurized package of the class including a container, a fluid composition in the container, propellant means also in the container for discharging the composition from the container, and a dispensing assembly mounted in the container and comprising a tubular body, means effecting communication between the interior of said body and the interior of the container, a discharge control member telescopically related to said body and formed with a bore open to atmosphere and adapted to communicate with the interior of said body, means closing said bore when said member is protracted and unclosing said bore when said member is retracted relatively to said body thus to provide a continuous passage for discharge of said fluid composition from the container under the influence of said propellant means, spring means normally urging said member towards protracted position, an indexing member positioned between said spring means and said control member and movable with the latter, said indexing and control members having cooperating means effective to shift said indexing member a selected annular distance upon each movement of said control member towards retracted position, retaining shoulders projecting inwardly of said tubular body said indexing member having radially extending elements cooperating with said shoulders when said indexing member is in alternate annular positions while retracted to lock said member and spring against movement of said control member to protracted position.

5. A pressurized package of the class including a container, a fluid composition in the container, propellant means also in the container for discharging the composition from the container, and a dispensing assembly mounted in the container and comprising a tubular body having a series of grooves therein, a discharge control member telescopically related to said body and formed with a bore open to atmosphere and adapted to communicate with the interior of said body, means closing said bore when said member is protracted and unclosing said bore when said member is retracted relatively to said body, an indexing member movable with said control member and formed with radial elements slidable into and out of said grooves, said indexing and control members having cooperating means effective to shift said indexing member a selected annular distance upon each movement thereof towards retracted position when said elements are out of said grooves, spring means urging said members towards protracted position, means positioned between said grooves engaging said radial elements when in selected annular positions to prevent movement thereof under the influence of said spring towards protracted position, and means effecting communication between the interior of said body and the interior of the container to provide a path for discharge of said fluid composition through said body and bore when said control member is retracted.

6. A pressurized package of the class including a container, a pressurized propellant in the upper interior of the container, a fluid composition in the lower interior of the container, and a dispensing assembly mounted in the top of the container and comprising a tubular body having a series of grooves therein, a discharge control member telescopically related to said body and formed with a bore open to atmosphere and adapted to communicate with the interior of said body and with an annular serrated undersurface, means closing said bore when said member is protracted and unclosing said bore when said member is retracted relatively to said body, an indexing member in said body formed with radial elements slidable into and out of said grooves and having inclined surfaces engageable wth the serrated surface of said control member whereby to shift said indexing member a selected annular distance upon each movement thereof towards retracted position when said elements are out of said grooves, spring means urging said members towards protracted position, means positioned between said grooves engaging said radial elements when in selected annular positions to prevent movement thereof under the influence of said spring towards protracted position, and means effecting communication between the interior of said body and the lower interior of the container to provide a path for discharge of said fluid composition through said body and bore when said control member is retracted.

7. A pressurized package according to claim 6, and further characterized in that the serrated surface of said control member is inclined upwardly and inwardly and said bore is adapted to communicate with the interior of said body before said indexing member radial elements move out of said grooves.

8. A pressurized package of the class including a container, a pressurized propellant in the upper interior of the container, a fluid composition in the lower interior of the container, and a dispensing assembly mounted in the top of the container and comprising a tubular body having a series of grooves therein, said grooves being alternately deep and shallow, a discharge control member telescopically related to said body and formed with a bore open to atmosphere and adapted to communicate with the interior of said body, means on said control member cooperating with said grooves to prevent rotary movement of said member, means closing said bore when said member is protracted and unclosing said bore when said member is at least partially retracted relatively to said body, an indexing member in said body formed with radial elements slidable into and out of said deep grooves, said indexing and control members having cooperating surfaces effective to shift said indexing member a selected annular distance upon each movement thereof towards retracted position when said elements are out of said grooves, spring means urging said members towards protracted position, means positioned between said grooves engaging said radial elements when in selected annular positions to prevent movement thereof under the influence of said spring towards protracted position, and means effecting communication between the interior of said body and the lower interior of the container to provide a path for discharge of said fluid composition through said body and bore when said control member is retracted.

9. A dispensing assembly of the class described comprising a tubular body, a discharge control member movable axially relatively to said body and formed with a bore open to atmosphere and adapted to communicate with the interior of said body, means closing said bore when said member is in a first position and unclosing said bore when said member is in a second position relatively to said body, spring means normally urging said member towards said first position, means effective upon movement of said member towards said second position to render said spring means ineffective, and means effective upon further movement of said member in the same direction to render said spring means effective.

10. A dispensing assembly of the class described comprising a tubular body, means projecting inwardly of said body, a discharge control member telescopically related to said body and formed with a bore open to atmosphere and adapted to communicate with the interior of said body, means closing said bore when said member is in protracted position and unclosing said bore when said member is in retracted position relatively to said

body, spring means normally urging said member towards protracted position, an indexing member movable with said control member, cooperating surfaces on said indexing and control members effective to shift said indexing member a selected annular distance upon movement of said control member towards retracted position, said indexing member having means cooperating with said means projecting inwardly of said body when said indexing member is in selected annular position while retracted to render said spring means ineffective.

11. A dispensing assembly of the class described comprising a tubular body having a series of axial grooves therein, said grooves being alternately deep and shallow, a discharge control member telescopically related to said body and formed with a bore open to atmosphere and adapted to communicate with the interior of said body, means on said control member cooperating with said grooves to prevent rotary movement of said member, means closing said bore when said member is protracted and unclosing said bore when said member is at least partially retracted relatively to said body, an indexing member in said body formed with radial elements slidable into and out of said deep grooves, said

indexing and control members having cooperating surfaces effective to shift said indexing member a selected annular distance upon each movement thereof towards retracted position when said elements are out of said grooves, spring means urging said members towards protracted position, means positioned between said grooves engaging said radial elements when in selected annular positions to prevent movement thereof under the influence of said spring towards protracted position, and means effecting communication between the interior of said body and a fluid source to provide a path for the flow of fluid through said body and bore when said control member is retracted.

References Cited by the Examiner

UNITED STATES PATENTS

2,706,660	4/55	Johnson et al.	222—394
2,752,066	6/56	Ayres	222—394
2,757,964	8/56	Both et al.	222—394
2,995,278	8/61	Clapp	222—394
3,107,827	10/63	Burmeister	222—394

RAPHAEL M. LUPO, *Primary Examiner.*