July 4, 1950 J. KOZINSKI 2,513,568

ELECTRODE

Filed April 24, 1947

Fig. 1

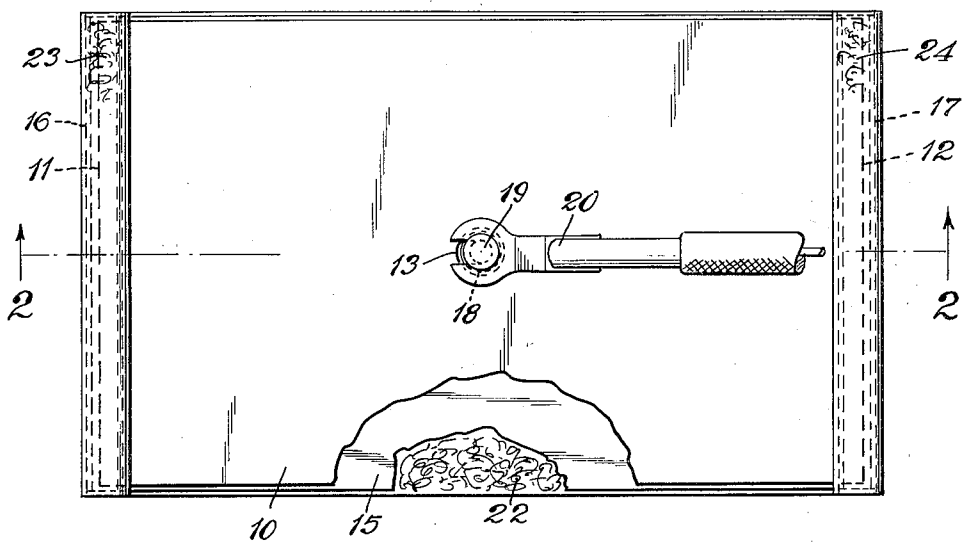

Fig. 2

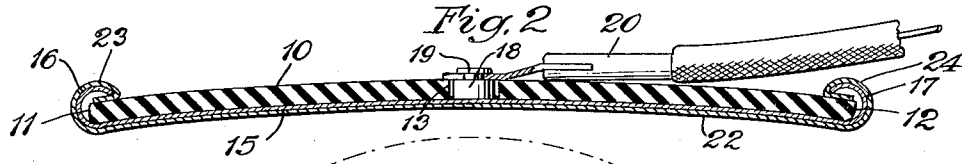

Fig. 3

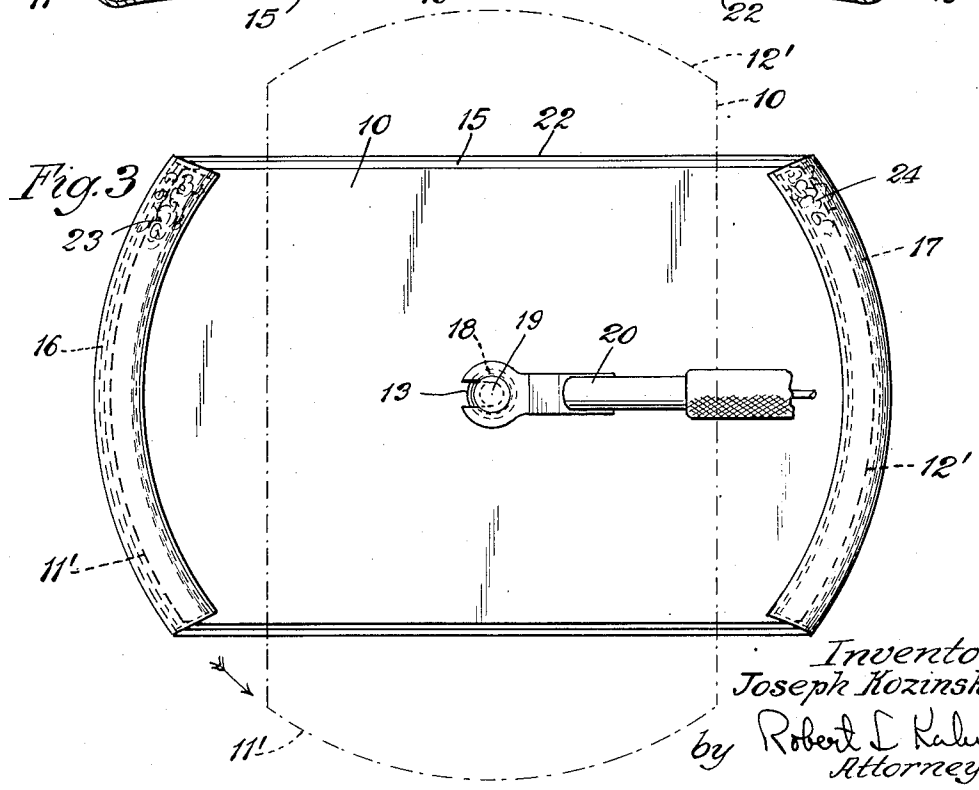

Inventor
Joseph Kozinski
by Robert L Kahn
Attorney

Patented July 4, 1950 2,513,568

UNITED STATES PATENT OFFICE

2,513,568

ELECTRODE

Joseph Kozinski, Chicago, Ill., assignor to H. G. Fischer & Co., Chicago, Ill., a corporation of Illinois

Application April 24, 1947, Serial No. 743,658

3 Claims. (Cl. 128—417)

1

This invention relates to an electrode for low voltage low frequency and direct current application to patients for medical use.

In certain types of medical treatment, it is necessary to apply electric currents to a patient by means of wet or moist packs. This arises principally because of the necessity for obtaining good contact with the skin of a patient.

In order to apply moist or wet electrode surfaces to the skin, it has hitherto been the practice to make a composite electrode structure having suitable water-absorbent material, such as asbestos or the like. Such electrode structures have been unsatisfactory from an esthetic point of view and also have been inconvenient and unsatisfactory because of sterilization problems. The use of electrodes having water-absorbent material therein has made it necessary to have several such electrodes on hand so that sterilization and drying may be accomplished.

In accordance with this invention, a construction is provided which is light, simple, inexpensive and which does not involve any problems of sterilization. In general, a structure embodying the present invention utilizes, as the water-absorbent material, a sheet of paper or similar material, which sheet is cheap enough to discard after use in a treatment. In general, a structure embodying the present invention utilizes a flexible electrode construction having means for readily retaining a sheet of paper or similar material, which sheet may be moistened before or after application to the electrode structure. The retention means for the sheet on the electrode structure is simple enough so that the sheet may be readily detached after a treatment whereupon the electrode structure is in condition for a new treatment cycle.

While a structure embodying the present invention may assume a wide variety of forms, exemplary embodiments are shown in the drawings wherein Figure 1 is a plan view of an electrode structure embodying the present invention with a sheet of absorbent material disposed in position, certain parts being broken away. Figure 2 is a section on line 2—2 of Figure 1. Figure 3 is a plan view of a modification.

Referring first to Figures 1 and 2, pad 10 of flexible insulating material is provided. This pad is preferably of rubber or similar material having good insulating qualities and preferably free from moisture-absorption characteristics. Pad 10 is preferably thick enough so that it has substantial body although the pad is sufficiently flexible so that it may be bent. Pad 10 may have any desired shape and is here shown as having a

2

simple rectangular shape with sides 11 and 12. Pad 10 has aperture 13 preferably through a central portion thereof.

Cooperating with pad 10 is electrode 15 of any suitable material. Preferably, electrode 15 is of spring metal, such as brass or bronze, but may be of stainless steel, aluminum or any other material. It is sufficient that electrode 15 have enough tensile strength to perform the mechanical function inherent in the construction. Electrode 15 is preferably dimensioned to match pad 10 with the electrode having shaped end portions 16 and 17 for cooperation with ends 11 and 12 of the pad.

Shaped ends 16 and 17 have sufficient body and are so proportioned with respect to pad 10 as to enable the ends to tightly fit over edges 11 and 12 of the pad.

Electrode 15 has attached thereto terminal 18, which terminal is adapted to register with aperture 13 in the insulating pad. Terminal 18 preferably has slotted neck 19, which is adapted to lie just above the top surface of pad 10. Cooperating with slotted neck 19 is detachable connector 20 for supplying low frequency current to the electrode.

Sheet 22 of suitable material is adapted to be used with the electrode structure thus far described. This sheet may be of any suitable material, either textile or preferably a paper having suitable strength. Thus, so-called wet strength paper may be used. Other papers such as melamine resin paper or urea formaldehyde paper may be used. Such paper has the desirable characteristic of retaining its strength while wet. Sheet 22 may be cut from a larger sheet of material and has ends 23 and 24 folded over shaped ends 16 and 17 of the electrode. As may be readily seen from the drawing, ends 23 and 24 of the paper are preferably long enough so that they may curl underneath the free edge of shaped portions 16 and 17 of the electrode. In this condition, flexible pad 10 may be sprung into position to lock the sheet in place. The locking of terminal 18 by means of connector 20 will retain the central portion of the electrode proper tightly in position against the rubber pad.

The paper sheet may be wet, either before or after disposal on the electrode structure. After a treatment, the electrode structure may be disassembled and the paper sheet discarded. Inasmuch as the electrode structure proper has no water-absorbing properties, it will be apparent that it may be sterilized or dried in any simple manner and be ready for a new sheet.

If desired, the electrode structure, as a whole,

may have curvilinear ends as shown in Figure 3. In this figure, insulating pad 10 has curved ends 11' and 12' and may be kept in position against the electrode but rotated with respect thereto for locking and unlocking the paper.

What is claimed is:

1. An electrode structure for medical use comprising a four sided sheet metal electrode, a metal terminal post attached to said sheet electrode at one face substantially at the central portion thereof and extending perpendicularly therefrom, said sheet electrode having two opposed sides with curled edge portions, an insulating member of flexible material having substantial body and being impermeable to water and having an aperture therethrough for accommodating the post, said insulating member being adapted to lie against said one electrode face and having edge portions fitting into said curled electrode portions and gripped thereby and an additional insulating sheet of flexible material disposed against the other electrode face and being thin and flexible enough so that its edge portions may be curled around said curled electrode portions with the curled insulating material being tucked around the edges of the electrode and locked into position by engagement of said curled electrode positions and edge portions of said first named insulating sheet material, said post having a slotted neck portion at a distance from the one electrode face about equal to the thickness of said apertured insulating member, and a U-shaped connector for engaging said slotted neck, said connector extending away from the post and overlying the apertured insulating member for locking said member to said electrode while making contact with said electrode.

2. The structure according to claim 1 wherein said first insulating member is of rubber and said second insulating member is of water absorbent material.

3. The structure according to claim 1 wherein said additional insulating sheet is of wet-strength paper.

JOSEPH KOZINSKI.

REFERENCES CITED

The following references are of record in the file of this patent:

UNITED STATES PATENTS

Number	Name	Date
542,508	Van Tuyle, Jr.	July 9, 1895
562,765	Horton, Jr.	June 23, 1896
1,583,087	Morse	May 4, 1926
1,889,271	Zerne	Nov. 29, 1932

FOREIGN PATENTS

Number	Country	Date
19,010	Great Britain	1893
59,458	Austria	June 10, 1913