AU9515888

(12) PATENT ABRIDGMENT (11) Document No. AU-B-15888/95
(19) AUSTRALIAN PATENT OFFICE (10) Acceptance No. 692223

(54) Title
METHOD AND DEVICE FOR TRANSMITTING DATA PACKETS

International Patent Classification(s)
(51)[6] **H04L 012/56** **H04J 003/06** **H04N 007/62**

(21) Application No. : **15888/95** (22) Application Date : **23.02.95**

(87) PCT Publication Number : **WO95/23495**

(30) Priority Data

(31) Number	(32) Date	(33) Country
94200477	**25.02.94**	**EP EUROPEAN PATENT OFFICE (EP)**

(43) Publication Date : **18.09.95**

(44) Publication Date of Accepted Application : **04.06.98**

(71) Applicant(s)
PHILIPS ELECTRONICS N.V.; PHILIPS NORDEN AB

(72) Inventor(s)
JURGEN FRITZ ROSENGREN

(74) Attorney or Agent
F B RICE & CO , 605 Darling Street, BALMAIN NSW 2041

(56) Prior Art Documents
EP 0577329
WO 94/00952
EP 0609936

(57) Claim

1. A method of remultiplexing data packets (P11, P12, P13) from at least one input stream (TS1) of data packets into at least one output stream (TS) of data packets, comprising the steps of associating each data packet with a time window (LTW) [a data packet] and including position information in each [the] packet about the position of said data packet within said window.

ANNOUNCEMENT OF THE LATER PUBLICATION OF INTERNATIONAL SEARCH REPORTS

PCT

INTERNATIONAL APPLICATION PUBLISHED UNDER THE PATENT COOPERATION TREATY (PCT)

(51) International Patent Classification :	A3	(11) International Publication Number:	WO 95/23495
H04N 7/62, H04J 3/06		(43) International Publication Date:	8 September 1995 (08.09.95)

(21) International Application Number: PCT/IB95/00116

(22) International Filing Date: 23 February 1995 (23.02.95)

(30) Priority Data:
94200477.1 25 February 1994 (25.02.94) EP
(34) Countries for which the regional or international application was filed: NL et al.

(71) Applicant *(for all designated States except US)*: PHILIPS ELECTRONICS N.V. [NL/NL]; Groenewoudseweg 1, NL-5621 BA Eindhoven (NL).

(71) Applicant *(for SE only)*: PHILIPS NORDEN AB [SE/SE]; Kottbygatan 5, Kista, S-164 85 Stockholm (SE).

(72) Inventor; and
(75) Inventor/Applicant *(for US only)*: ROSENGREN, Jurgen, Fritz [SE/NL]; Groenewoudseweg 1, NL-5621 BA Eindhoven (NL).

(74) Agent: SCHMITZ, Herman, Jan, Renier; Internationaal Octrooibureau B.V., P.O. Box 220, NL-5600 AE Eindhoven (NL).

(81) Designated States: AU, JP, KR, US, European patent (AT, BE, CH, DE, DK, ES, FR, GB, GR, IE, IT, LU, MC, NL, PT, SE).

Published
With international search report.
Before the expiration of the time limit for amending the claims and to be republished in the event of the receipt of amendments.

(88) Date of publication of the international search report:
28 September 1995 (28.09.95)

692223

(54) Title: METHOD AND DEVICE FOR TRANSMITTING DATA PACKETS

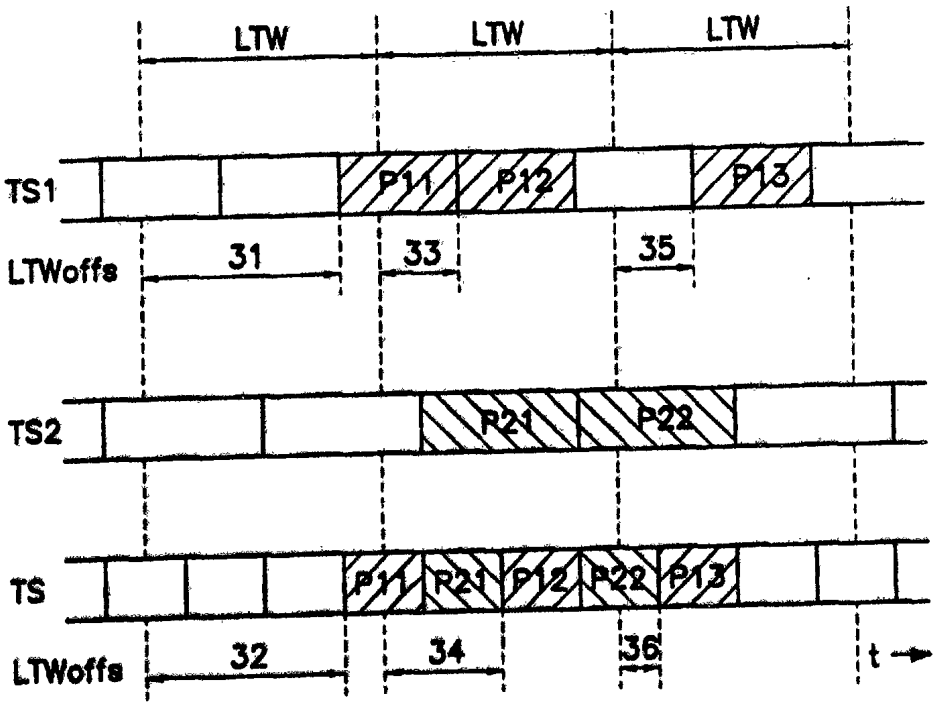

(57) Abstract

Method and device for transmitting data packets (P11, P12, P13) from an input stream (TS1) of data packets into an output stream (TS) of packets. When a plurality of transport streams (TS1, TS2) is multiplexed, packet jitter may be introduced to such an extent that decoder buffers can overflow or underflow. This is avoided by associating a time window (LTW) with a data packet and accommodating position information (31-36) in the packet about the position of said data packet within said window.

Method and device for transmitting data packets.

FIELD OF THE INVENTION

The invention relates to a method and a device for transmitting data packets. In particular, the invention relates to a method and a device for transmitting data packets from an elementary MPEG stream in a transport stream.

BACKGROUND OF THE INVENTION

In "Information technology - Generic coding of moving pictures and associated audio information - Part 1: Systems", published December 1, 1993, as Draft International Standard ISO/IEC CD 13818-1, and hereinafter referred to as CD 13818-1, a system is disclosed for transmitting MPEG encoded video and audio signals as well as data. Elementary MPEG streams of data are packetized. The packets are multiplexed so as to form a program stream or a transport stream. The transport stream thus constitutes a packet-based time multiplex transmission channel. Data is transmitted in transport packets of 188 bytes each. Each transport packet belongs to exactly one elementary stream. One or more elementary streams make up a program. Each elementary stream has a data rate, which may be variable or constant.

Since more than one elementary streams share one transport stream, and because of quantization effects due to the fixed length of a transport packet, the spacing of the transport packets of one elementary stream will not be uniform. This effect is referred to as "jitter". This is illustrated in Figure 1 which shows an example of a typical transport stream. The packets P1,P2,.. shown in the Figure are packets from one elementary stream. Due to jitter they are not equally spaced.

To compensate for jitter, a video or audio decoder will have to have a buffer oversize. On page 15 of CD 13818-1, said buffer oversize is specified as a portion of the decoder buffer size. The jitter may never be so large that it causes an underflow (packet arriving too late) or an overflow (packet arriving too early) of the buffer in the Target Decoder. A transport stream fulfilling this and other requirements is referred to as a "legal" MPEG2 transport stream.

In many applications, it will be necessary to perform a remultiplexing of a transport stream. A remultiplexing operation is understood to mean any operation which has one or more legal MPEG2 transport streams as input stream and produces a legal MPEG2 transport stream as the output stream. Examples of remultiplexing operations are:

1) Joining several transport streams containing one program to a multi-program transport stream,

2) Adding a program to a multi-program transport stream, creating a new transport stream,

3) Selecting some programs from a multi-program transport stream, creating a new transport stream, and

4) Recording one program selected from a multi-program transport stream.

The problem in a remultiplexing operation is that the remultiplexer cannot know the original scheduling moment of a certain transport packet belonging to a certain elementary stream. When the remultiplexer produces its output stream, it may be impossible to schedule the packet in the right position. The remultiplexer must then choose whether to schedule the packet earlier or later. In both cases, the jitter of that packet is changed. Since the remultiplexer does not know the original scheduling moment, it cannot be sure that the output stream is legal.

Furthermore, the draft MPEG2 systems standard CD 13818-1 allows the transmission of elementary streams having a variable bit-rate. After a certain number of remultiplexing steps, the jitter added by each step will have changed the momentary rate of the elementary stream in an unpredictable manner. It is not possible to reconstruct the original rate because no information about the original scheduling moment of a certain packet is available.

SUMMARY OF THE INVENTION

The invention includes a method of remultiplexing data packets (P11, P12, P13) from at least one input stream (TS1) of data packets into at least one output stream (TS) of data packets, comprising the steps of associating each data packet with a time window (LTW) and including position information in each packet about the position of said data packet within said window. A packet can then be scheduled anywhere within said window without violating buffer constraints.

In a preferred embodiment of the invention, the position information takes

AUSTRALIAN 13 PATENT OFFICE

the form of a parameter included in said data packet, for example the offset of the start of the packet with reference to the start of the window.

Transmitting the offset parameter in each packet would create too much overhead. Therefore, in yet another embodiment, the position information includes a further parameter representing the distance between the time windows associated with successive data packets from the same elementary stream. The position information of other packets can then be calculated.

BRIEF DESCRIPTION OF THE FIGURES

The invention will now be elucidated by way of a description of embodiments and drawings, in which:

Fig.1, already discussed, is a diagram illustrating the problem underlying the invention.

Fig.2 shows a device for carrying out the method according to the invention.

Fig.3 shows a time diagram to illustrate the operation of the device shown in Fig.3.

Fig.4 is a time diagram to illustrate a further embodiment of the method according to the invention.

DESCRIPTION OF EMBODIMENTS

Fig.2 shows a device for transmitting a plurality of audiovisual programs through a channel. The device comprises a first packetizer **100** which receives an elementary stream ES1(V) representing a first video signal and an elementary stream ES1(A) representing the associated first audio signal. The first packetizer provides a first transport stream TS1. A second packetizer **200** receives an elementary stream ES2(V) representing a second video signal and an elementary stream ES2(A) representing the associated second audio signal. The second packetizer provides a second transport stream TS2. Both transport streams TS1 and TS2 comprise packets having a length of 188 bytes. They are applied to a remultiplexer **300** which joins both transport streams TS1 and TS2 into an output transport stream TS. Further input transport streams TS3,TS4,.. may be applied to the remultiplexer, and a plurality of remultiplexers may be connected in cascade.

Packetizers **100** and **200** have a similar structure so that one of them will be explained further. As shown in the Figure, packetizer **100** comprises a buffer **101** for

temporarily storing the elementary video stream ES1(V) and a buffer **102** for temporarily storing the elementary audio stream ES1(A). The buffers are packetwise read out by a control circuit **120** via a communication bus **130**. The control circuit is further adapted to process data in the buffers via the communication bus. The packets read from the buffers are applied to a multiplexer **110**.

Eventually, the transport streams TS1 and TS2 are to be decoded by an MPEG2 decoder (not shown). As prescribed by the MPEG2 standard, said decoder comprises an input buffer. CD 13818-1 specifies a portion of this buffer to be allocated to allow multiplexing. The buffer oversize and the momentary bitrate enable the control circuit **120** to establish a timing window in which the current packet must be transmitted. If the packet is transmitted outside said window, overflow and underflow of the decoder's input buffer may occur.

Fig.3 illustrates the time relation between packets P10,P11,P12,P13.. in transport stream TS1 supplied by the first packetizer and the windows in which they are to be transmitted. If this requirement is fulfilled, the transport stream ES is said to be "legal". In view hereof, the windows are also referred to as legal time window. In Fig.3 they are denoted LTW. In the example shown, all windows are contiguous and have the same length. However, this is not mandatory in practice.

As shown in Fig.2, a plurality of transport streams is remultiplexed in remultiplexer **300**. The remultiplexing operation introduces a positive or negative shift, i.e. jitter, of the packets P10,P11,P12,P13,.. (see Fig.3) with respect to their respective windows. If remultiplexer **300** transmits a packet outside its respective window, overflow or underflow of the decoder input buffer may occur. The transport stream is then no longer legal.

In order to assist the remultiplexer **300** in avoiding this situation, the control circuit **120** in packetizer **100** determines the position of the transmitted packets within the respective legal time windows LTW and includes data indicative of said position in the packet. As an example, Fig.3 shows an offset LTWoffs (**31,33,35**) between the start of a window and the start of the packet associated therewith. The offset of a packet is accommodated in said packet by the control circuit **120**.

The structure of remultiplexer **300** is shown in Fig.2. The remultiplexer comprises an input buffer **301,302,..** for each received transport stream TS1,TS2,.. The buffers are packetwise read out and applied to a multiplexer **310** under control of a control

circuit 320. The control circuit 320 is adapted to read and modify the offset LTWoffs accommodated in the packets via a communication bus 330.

The operation will now be described with reference to Fig.3. This Figure also shows the second transport stream TS2 received from packetizer 200 (Fig.2) and the resulting transport stream TS. For reasons of clarity, an overall delay between input and output streams is not shown in Fig.3. Similarly, the legal time windows and offsets associated with packets P20,P21,P22,.. of the second transport stream TS2 are not shown.

The control circuit 320 reads the offset parameter LTWoffs of each received packet and thus knows the period of time in which the packet must be retransmitted. As an example, consider a LTW length of 4 ms. If a certain packet in an incoming transport stream arrives 0.1 ms after the start of its LTW (LTWoffs = 0.1) the control circuit 320 knows that:

- If this packet is scheduled 0.1 ms earlier, or 3.9 ms later, the resulting stream will still be legal.
- In a conflict between this packet and a packet with a LTWoffs = 3.9, the latter must be given priority.
- If it is desired to recreate the original momentary rate of a certain elementary stream, the outgoing packets belonging to that elementary stream can all be scheduled so that they acquire the same LTWoffs.

In the example shown in Fig.3, the control circuit concludes from the offset 31 included in packet P11 that a positive delay of said packets with respect to its legal time window is not allowed. If packet P11 were transmitted later, it would no longer start in the corresponding legal time window. Accordingly, packet P11 from transport stream TS1 is retransmitted without delay and the offset 32 accommodated in the retransmitted packet is not modified. Packet P12, however, is delayed with respect to its legal time window because priority has been given to transmission of packet P21 from the second transport stream TS2. Accordingly, the control circuit modifies the offset 33 accommodated in received packet P12 into a different offset 34 in the retransmitted packet P12. The same applies to packet P13 having an offset 35. This packet P13 is given a negative delay (i.e. smaller than the overall delay) in this example, which yields a new offset 36.

A method of accommodating the relevant parameters in the packets will now be given. The syntax as described in Chapter 2.3 of Draft International Standard CD 13818-1 is used. The relevant parameters are accommodated in the transport stream adaptation field shown in Table 2.6 of CD 13818-1. Table I shows a suitable syntax which

involves the use of the adaptation_field_extension flag.

```
if (adaptation_field_extension_flag = = '1'){
        adaptation_field_extension_length   8        uimsbf
        remux_field_flag                    1        bslbf
        reserved                7           bslbf
        if (remux_field_flag = = '1'){
            ltw_offset                      12       uimsbf
            momentary_rate_ratio            12       uimsbf
        }
        for (i=0;i<N;i++){
            reserved  8                     bslbf
        }
}
```

Table I

Herein, the offset parameter LTWoffs is denoted ltw_offset. It is a 12 bit field containing the offset (counted in units of the 90 kHz portion of the system time clock), of the first byte of this packet from the start of a Legal Time Window, LTW, the properties of which are:

1. A fixed length per elementary stream. This length can either be normatively defined within MPEG2 or conveyed by means of a descriptor.
2. If the first byte of this packet is scheduled anywhere within its LTW, no buffer violation occurs.

Transmitting the offset parameter in each packet would create too much overhead. Therefore the offset is inserted in selected packets (packets in which remux_field_flag is set to '1'), together with information about the distance in time between the legal time windows of successive packets of the same elementary stream. The distance between the legal time windows of successive packets of the same elementary stream will be referred to as DIST. An explanatory example is shown in Fig.4. Knowing the offset LTWoffs(P0) and the arrival time t(P0) of a packet P0, the offset LTWoffs(P1) of the next packet P1 can be computed from its arrival time t(p1) by the equation:

$$LTWoffs(P1) = [t(P1)-t(P0)] - [DIST - LTWoffs(P0)]$$

The distance DIST can be derived from a further parameter (momentary_rate_ratio, see Table I) which is accommodated in the selected packets. Said parameter momentary_rate_ratio is a 12 bit field, which describes the momentary bitrate of this

elementary stream computed over a window starting with this packet and ending just before the next packet to contain this field. The momentary rate R_m (in bytes/sec) can be computed by:

$$R_m = \frac{mom\ rate\ ratio + 1}{4096} k \times R_{es}(\max)$$

where k is a factor yet to be determined. Typically, k=1.2 might be considered. R_{es}(max) is the maximum bitrate of a variable-rate elementary stream or the bitrate of a constant-rate elementary stream. The distance DIST is now defined by:

$$DIST = \frac{188}{R_m}$$

Finally, some applications using the information encoded above are described. A first application is remultiplexing. In a typical remultiplex operation, several input transport streams are mixed to form an output transport stream. For certain time slots in the output transport stream, collisions may occur; in the worst case, all input streams may have packets ready for scheduling. The remultiplexer must then choose the order of transmission of the different packets. Using the method of the invention, the remultiplexer easily determines what packets are to be given priority.

A second application is the transport of streams having variable bitrates. At the receiving end of a transmission chain, the momentary bitrate of each elementary stream will deviate considerably from the original momentary rate because of accumulated jitter. The method of the invention enables the receiver to recreate the original bitrate. This can be important, for example in certain variable-rate video encoding schemes.

A third application relates to time-critical data transfer. For some applications, e.g. subtitles in a TV program, it is necessary to be able to reconstruct at the receiving end the intended moment of arrival of data which is not video or audio. The method according to the invention makes such a reconstruction possible.

A fourth application is recording and playback. When recording a transport stream containing just one program, the simplest way is to just store sequentially all transport packets belonging to the elementary streams making up that program. However, upon playback, the recorder must know when to place each packet in the outgoing transport stream. Any time slot that will not be occupied by the outgoing packet must be filled with a null packet. The information provided above makes it possible to reconstruct a legal transport

stream with hardly any effort.

THE CLAIMS DEFINING THE INVENTION ARE AS FOLLOWS:-

1. A method of remultiplexing data packets (P11, P12, P13) from at least one input stream (TS1) of data packets into at least one output stream (TS) of data packets, comprising the steps of associating each data packet with a time window (LTW) [a data packet] and including position information in each [the] packet about the position of said data packet within said window.

2. A method as claimed in claim 1, in which the position information takes the form of a parameter (LTWoffs) included in said data packet.

3. A method as claimed in claim 2, in which the position information includes a further parameter (DIST) representing the distance between the time windows associated with successive data packets from the same elementary stream.

4. A device for remultiplexing data packets from at least one input stream (ES1; TS1) of data packets into at least one output stream (TS1; TS) of data packets, comprising means for associating a time window (LTW) with a data packet and including position information in the packet about the position of said data packet within said window.

5. A device as claimed in claim 4, in which the position information takes the form of a parameter (LTWoffs) included in said data packet.

6. A device as claimed in claim 5, in which the position information includes a further parameter (DIST) representing the distance between the time windows associated with successive data packets from the same elementary stream.

7. A digital information signal in the form of a stream (TS1, TS) of data packets, characterised in that a time window (LTW) is associated with a packet and in that the packet includes position information about the position of said data packet within said window.

8. A method of remultiplexing data packets substantially as hereinbefore described and with reference to Figures 2 to 4 in the accompanying drawings.

9. A device for multiplexing data packets substantially as hereinbefore described and with reference to Figures 2 to 4 in the accompanying drawings.

AUSTRALIAN 13 PATENT OFFICE

10. A digital information signal substantially as hereinbefore described and with reference to Figures 2 to 4 in the accompanying drawings.

Dated this Twenty-seventh day of March 1998

PHILIPS ELECTRONICS NV
Patent Attorneys for the Applicant:

F B RICE & CO

AUSTRALIAN PATENT OFFICE

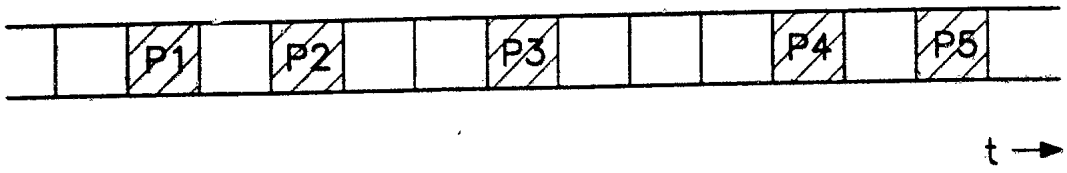
P1
P2
P3
P4
P5
t

FIG. 1

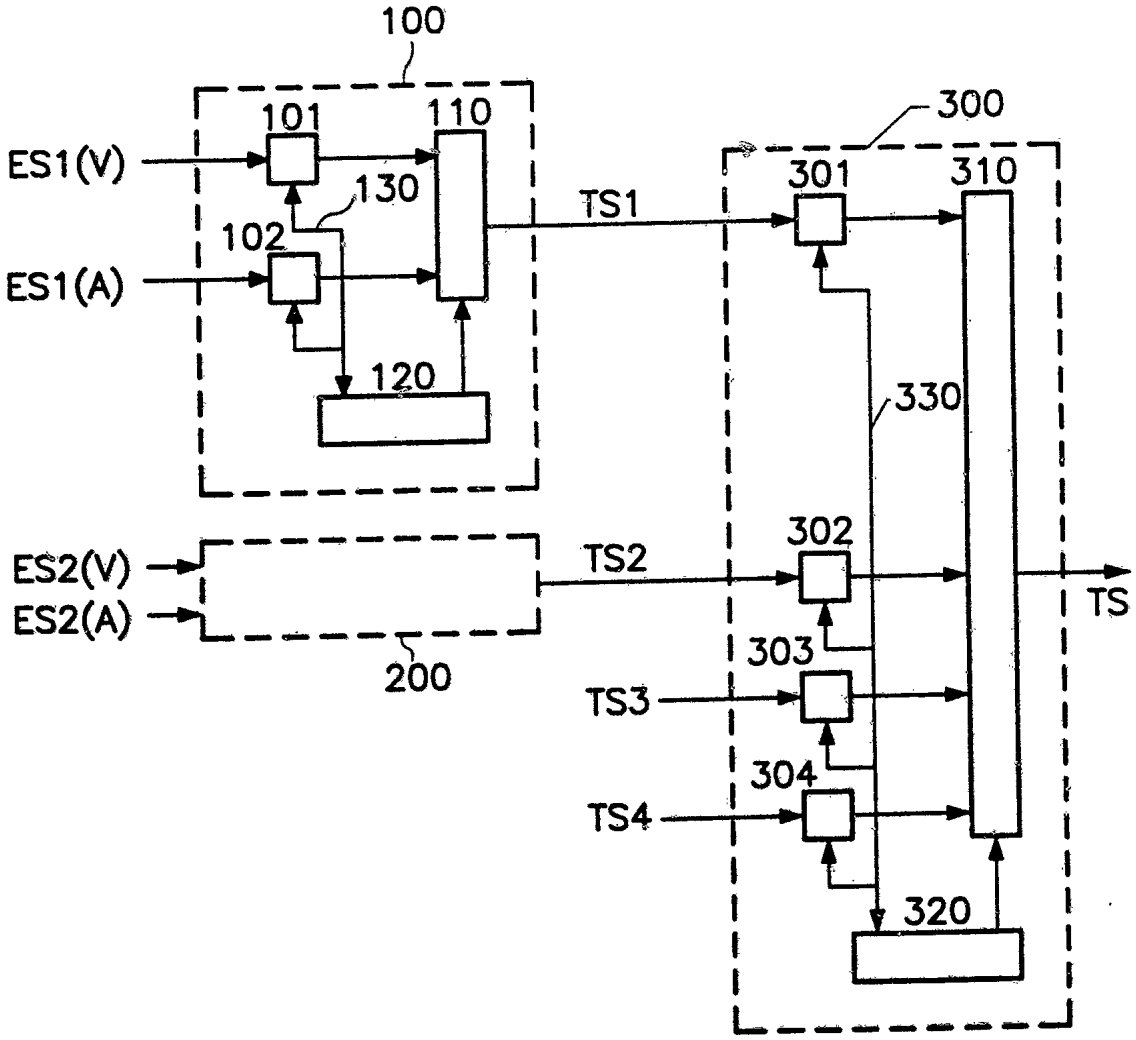
100
101
110
ES1(V)
130
102
ES1(A)
120
TS1
300
301
310
330
ES2(V)
ES2(A)
200
TS2
302
TS
303
TS3
304
TS4
320

FIG. 2

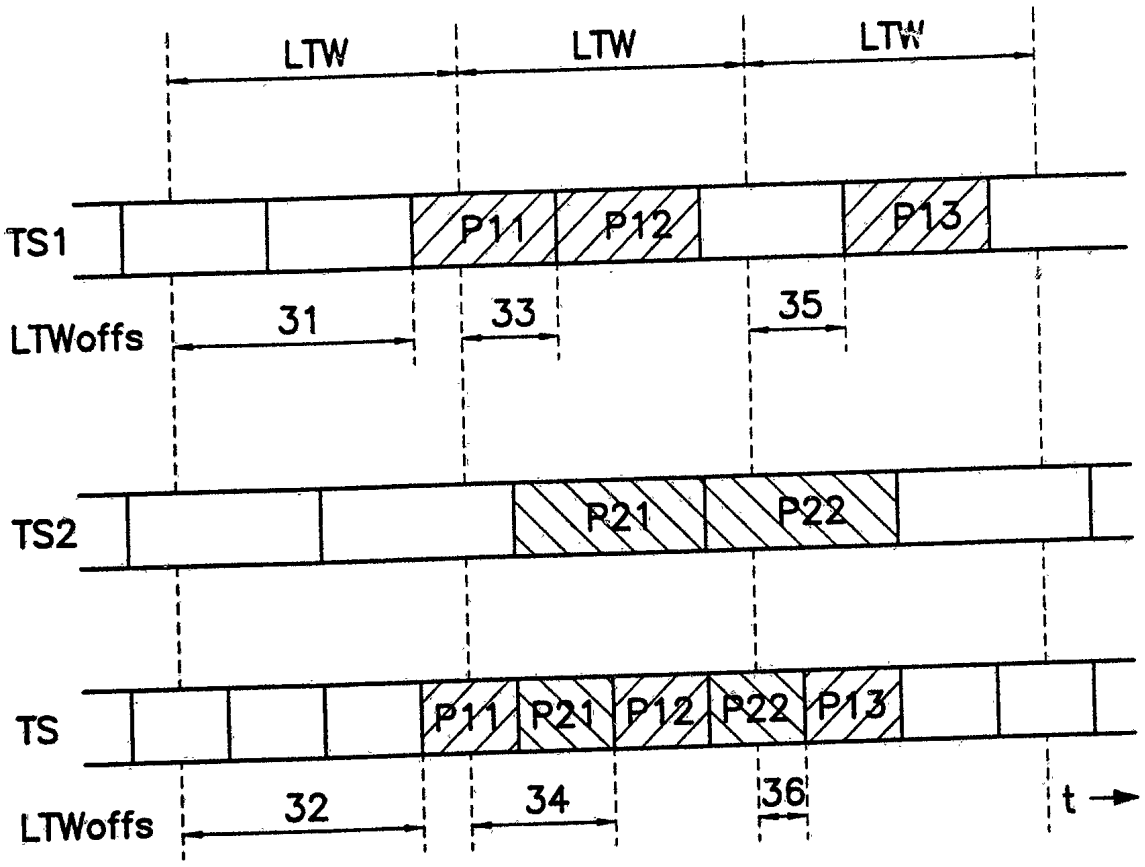
LTW
LTW
LTW
TS1
P11
P12
P13
LTWoffs
31
33
35
TS2
P21
P22
TS
P11
P21
P12
P22
P13
LTWoffs
32
34
36
t

FIG. 3

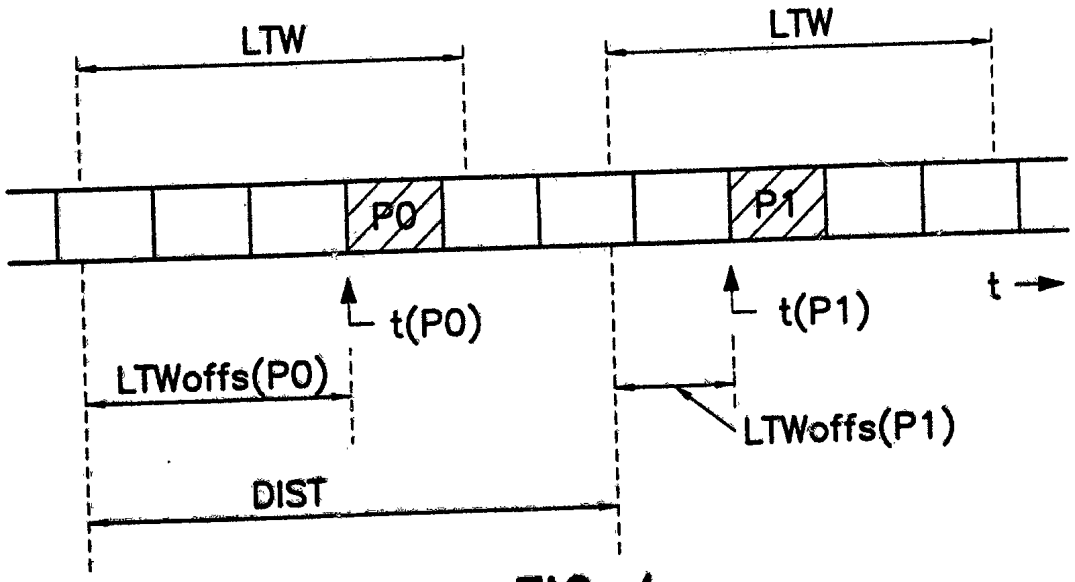
LTW
LTW
P0
P1
t
t(P0)
t(P1)
LTWoffs(P0)
LTWoffs(P1)
DIST

FIG. 4

INTERNATIONAL SEARCH REPORT

International application No.
PCT/IB 95/00116

A. CLASSIFICATION OF SUBJECT MATTER

IPC6: H04N 7/62, H04J 3/06
According to International Patent Classification (IPC) or to both national classification and IPC

B. FIELDS SEARCHED

Minimum documentation searched (classification system followed by classification symbols)

IPC6: H04N, H04J, H04Q

Documentation searched other than minimum documentation to the extent that such documents are included in the fields searched

Electronic data base consulted during the international search (name of data base and, where practicable, search terms used)

PATFULL, CLAIMS, WPIL

C. DOCUMENTS CONSIDERED TO BE RELEVANT

Category*	Citation of document, with indication, where appropriate, of the relevant passages	Relevant to claim No.
A	IEEE Global Telecommunications Conference pp. 1374-1380, Volume 3, 1992, D. Ray Chaudhuri, "A flexible and robust packet transport protocol for digital HDTV", page 1376 - page 1378, section III --	1-7
P,X	"Information technology-Generic coding of moving pictures and associated audio information Part 1: Systems", ISO/IEC Draft International Standard DIS 13818-1, 1994; cited in the application see pages 15,16,24-25,106	1-2,4-5,7
P,A	 --	3,6

[X] Further documents are listed in the continuation of Box C. [X] See patent family annex.

* Special categories of cited documents:
"A" document defining the general state of the art which is not considered to be of particular relevance
"E" erlier document but published on or after the international filing date
"L" document which may throw doubts on priority claim(s) or which is cited to establish the publication date of another citation or other special reason (as specified)
"O" document referring to an oral disclosure, use, exhibition or other means
"P" document published prior to the international filing date but later than the priority date claimed
"T" later document published after the international filing date or priority date and not in conflict with the application but cited to understand the principle or theory underlying the invention
"X" document of particular relevance: the claimed invention cannot be considered novel or cannot be considered to involve an inventive step when the document is taken alone
"Y" document of particular relevance: the claimed invention cannot be considered to involve an inventive step when the document is combined with one or more other such documents, such combination being obvious to a person skilled in the art
"&" document member of the same patent family

Date of the actual completion of the international search	Date of mailing of the international search report
31 August 1995	01-09-1995
Name and mailing address of the ISA/ Swedish Patent Office Box 5055, S-102 42 STOCKHOLM Facsimile No. +46 8 666 02 86	Authorized officer Lars Christerson Telephone No. +46 8 782 25 00

Form PCT/ISA/210 (second sheet) (July 1992)

INTERNATIONAL SEARCH REPORT

Information on patent family members

31/07/95

International application No.
PCT/IB 95/00116

Patent document cited in search report	Publication date	Patent family member(s)	Publication date
EP-A2- 0577329	05/01/94	NONE	
WO-A1- 9400952	06/01/94	NONE	
EP-A2- 0609936	10/08/94	NONE	