(No Model.)

J. D. LAMB & J. E. CHAPMAN.

STREET CAR FENDER.

No. 587,315. Patented Aug. 3, 1897.

Fig. 1

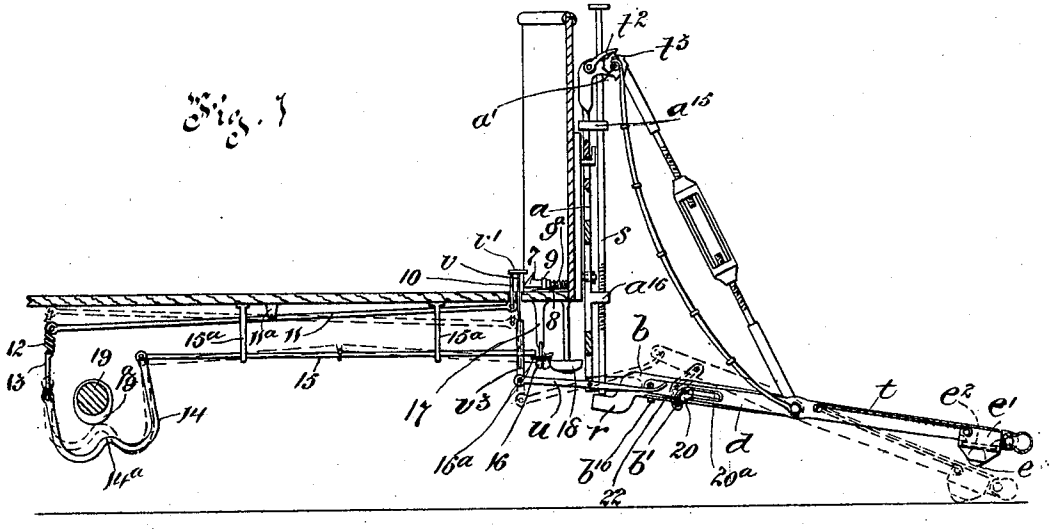

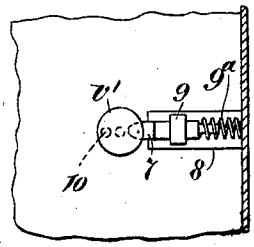

Fig. 2

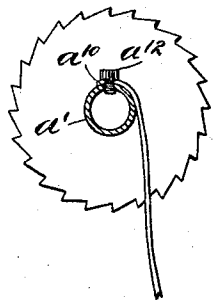

Fig. 3

Fig. 4.

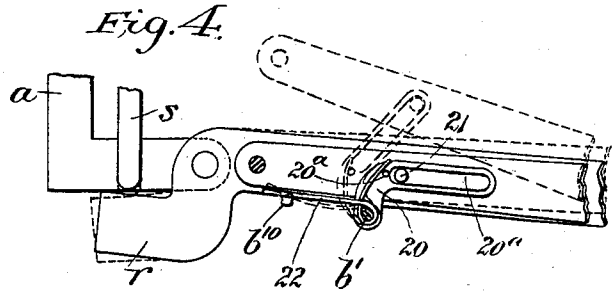

Witnesses

Wm. P. McFeat

R. A. C. Kimber

Inventors

James D. Lamb

James E. Chapman

By their Attorney

O. Wm. Wiseman

THE NORRIS PETERS CO., PHOTO-LITHO., WASHINGTON, D. C.

UNITED STATES PATENT OFFICE.

JAMES D. LAMB AND JAMES E. CHAPMAN, OF MONTREAL, CANADA, ASSIGNORS OF ONE-FOURTH TO JOHN JAMES DURACK, OF SAME PLACE, AND PATRICK JOHN BRENNAN, OF OTTAWA, CANADA.

STREET-CAR FENDER.

SPECIFICATION forming part of Letters Patent No. 587,315, dated August 3, 1897.

Application filed February 25, 1896. Serial No. 580,753. (No model.)

To all whom it may concern:

Be it known that we, JAMES DOMINIQUE LAMB and JAMES EDWIN CHAPMAN, of the city of Montreal, in the district of Montreal and Province of Quebec, Canada, have invented certain new and useful Improvements in Street-Car Fenders; and we do hereby declare that the following is a full, clear, and exact description of the same.

Our invention relates more particularly to fenders of the type on which Letters Patent of the United States were granted to us October 1, 1895, No. 547,218.

The object of the invention is to improve the general construction of the above and of like fenders generally, whereby they can be more readily operated either in raising or lowering same bodily from or to the ground or in tilting the front portion thereof; and, furthermore, the invention provides a means for holding said front portion in its tilted position, additional means for causing the bell to ring continually while such front portion is tilted, besides various details to be hereinafter fully described, and pointed out in the claims, and illustrated in the accompanying drawings, forming a part hereof, in which like symbols indicate the same parts, and wherein—

Figure 1 is a transverse vertical sectional view of a street-car with our improved fender, which is also in section, and the bell-ringing mechanism attached thereto. Fig. 2 is an enlarged detail plan view of our improved device for holding the front portion in its tilted position; Fig. 3, a detail sectional view of our improved take-up roller, and Fig. 4 an enlarged detail elevation of our improved means for retaining the front section of our fender in its tilted-up position.

The fender embodies a stationary back piece *a*, which is secured to the dashboard of the car, an intermediate section *b*, pivoted to the stationary back piece, and a tilting front section *d*, carried by the intermediate section, and as these parts of the fender may be and are mainly similar in construction and arrangement to the corresponding parts illustrated, described, and claimed in our above-mentioned United States patent, and therefore, although illustrated, they will only be incidentally alluded to in the specification.

The back piece *a* has upper and lower projections a^{15} a^{16}, perforated to allow of the passage therethrough of a vertical rod *s*, screw-threaded to take into the perforation in the lower projection a^{16}, which is correspondingly screw-threaded, and the lower end of this rod *s* bears upon a rearward projection *r* from the intermediate section *b*, through which, by the lowering or raising of rod *s*, the forward end of such intermediate section, and with it the tilting section, will be raised or lowered from or to the ground.

As a preferable means to hold the front section in its tilted position we form the operating-rod *v* with a head *v'* of extended width in order that in its downward movement to tilt such front section it will engage and be held in its downward position by a retaining device, preferably consisting of a latch or bolt 7, sliding horizontally upon a base-plate 8, and guided by means of a partially-inclosing band 9. This latch or bolt is preferably kept normally in a position to engage and retain the head *v'* of said rod *v* by means of coiled spring 9^a, adapted to bear at one end against the dashboard of the car and at its other end against a shoulder on such latch or bolt 7, preferably formed by diminishing the end thereof. The rod *v* is preferably made extensible to accommodate cars of different height by screw-threading its lower half to take into an interiorly-screw-threaded tubular section v^3, pivotally connected to the lever *u*.

The means that we prefer to use to cause the bell to ring continually while the front section is in its tilted position preferably consists of a vertical rod 10, guided in an opening through the platform of the car and pivotally carried on one end of a lever 11, fulcrumed to a bracket projection 11^a, carried on the under side of the car. The other end of this lever is yieldingly connected by means of a spiral sping 12 and link 13 to one end of a U-shaped section 14, adapted to straddle the axle 19 of the car. The other end of this section 14 is pivotally connected to one end of a compound lever 15 hung in brackets 15^a

from the under side of a car and having its other end adapted to operate the knocker 16 (pivotally hung from a bracket 17) of the bell 18 by acting upon the cross-arms 16^a of said knocker. The U-shaped section 14 is provided with a rise 14^a and the axle 19 with an eccentric 19^a, located in a position to bear upon said rise 14^a, and if rod v has been pushed down depress said U-shaped section and the end of the compound lever 15, to which it is connected, and consequently also depress the opposite end of said lever and ring the bell, which will be repeated upon every revolution of the axle.

To yieldingly retain the front section d in its upward or untilted position, a lever 20 is fulcrumed upon the cross-bar b' of the intermediate section b, this lever being slotted, as at 20^a, to take over a pin projection 21 upon the frame d.

A coiled spring 22 is carried by cross-bar b' in close proximity to said lever 20 and having one of its ends adapted to bear upon a lateral pin projection 20^a from such lever 20, while its other end bears upon a lateral projection b^{10} from said section b.

In order to securely attach the apron or netting t to its roller a' and yet allow it to be readily detached therefrom, when desired, the roller is provided with a series of borings which are screw-threaded to receive the correspondingly screw-threaded end of a plug a^{10}, provided with a head a^{12}. These plugs have their screw-threaded ends first passed through the apron or netting and then screwed into the roller a'.

The device for retaining this roller a' against rotation consists in this case of a gravity-pawl l^2, mounted on the upper end of the frame a, and a ratchet-wheel l^3, mounted upon such roller a'.

Our improved rollers for keeping the forward end of the fender from scraping on the ground or rails each consists of a ball e, carried in a box or casing e', having an open and tapered bottom through which said ball projects and in which position it is held by means of a retaining-plate e^2, removably held therein, the box or casing e' being secured to the forward end of the tilting section.

It is obvious that many other devices may be used for ringing the bell and other changes made without departing from the spirit of our invention.

What we claim is as follows:

1. A car-fender having a forwardly-projecting tilting section; rod-and-lever mechanism for operating said tilting section the rod of said rod-and-lever mechanism being variable in length and projecting vertically through the platform of the car and being provided with a laterally-extending head; and a spring-operated bolt adapted to engage the laterally-extending head of said rod when said tilting section is in its tilted position, for the purpose set forth.

2. The combination of a stationary back piece secured to the front of the car, a forwardly-projecting section pivotally connected to said stationary back piece; a rearward extension from said forwardly-projecting section; a vertically-adjustable rod carried in bearings upon said stationary back piece; the lower end of such rod being normally in contact with said rearward extension and means for retaining said rod against vertical displacement, in any position to which said rod may be adjusted, for the purpose set forth.

3. The combination of a stationary back piece; secured to the front of the car; a forwardly-projecting section pivotally connected to said stationary back piece; a rearward extension from said forwardly-projecting section; a screw-threaded vertical rod taking in screw-threaded bearings formed upon said stationary back piece; the lower end of such rod being normally in contact with said rearward extension, for the purpose set forth.

4. A car-fender having a stationary back piece; an intermediate section; a forwardly-projecting tilting section pivoted to said intermediate section; a lever fulcrumed to said intermediate section and adapted to engage the rear end and limit the movement of said tilting section; a coiled spring having one end bearing downwardly upon said lever and the other end thereof engaging said intermediate section; and means for operating said tilting section, for the purpose set forth.

5. A car-fender having a stationary back piece; an intermediate section; a forwardly-projecting tilting section pivoted to said intermediate section; a lever fulcrumed to said intermediate section and offset and having the forward end thereof slotted and adapted to take over and engage a pin projection upon the rear end of said tilting section; a coiled spring having one end bearing downwardly upon said lever and the other end thereof engaging said intermediate section; and means for operating said tilting section, for the purpose set forth.

6. A car-fender having a stationary back piece; an intermediate section; a forwardly-projecting tilting section pivoted to said intermediate section; a lever fulcrumed to said intermediate section and adapted to engage the rear end of said tilting section; a coiled spring having one end bearing downwardly upon said lever and the other end thereof engaging said intermediate section; and means for operating said tilting section and means for automatically locking said tilting section, in its tilted position, for the purpose set forth.

7. The combination of a stationary back piece secured to the front of the car; a forwardly-projecting section pivotally connected to said stationary back piece; a rearward extension from said forwardly-projecting section; a vertically-adjustable rod carried in bearings upon said stationary back piece; the lower end of such rod being normally in

contact with said rearward extension, and means for retaining said rod against vertical displacement in any position to which said rod may be adjusted; a lever fulcrumed to said intermediate section and adapted to engage the rear end of said tilting section; a coiled spring having one end bearing downwardly upon said lever and the other end thereof engaging said intermediate section; for the purpose set forth.

8. The combination of a stationary back piece secured to the front of the car; a forwardly-projecting section pivotally connected to said stationary back piece a rearward extension from said forwardly-projecting section; a vertically-adjustable rod carried in bearings upon said stationary back piece; the lower end of such rod being normally in contact with said rearward extension; means for retaining said rod against vertical displacement in any position to which said rod may be adjusted; a lever fulcrumed to said intermediate section and adapted to engage the rear end of said tilting section; a coiled spring having one end bearing downwardly upon said lever and the other end thereof engaging said intermediate section; and means for automatically locking said tilting section in its tilted position, for the purpose set forth.

9. A car-fender having a stationary back piece; an intermediate section; a forwardly-projecting tilting section pivoted to said intermediate section; a box or casing secured to the forward end of said tilting section and having a tapering and open bottom, a ball adapted to project partially through such open bottom and a removable retaining-plate adapted to hold said ball against displacement, for the purpose set forth.

10. A car-fender having a forwardly-projecting tilting section, rod-and-lever mechanism for operating said tilting section and a spring-operated bolt adapted to engage said rod-and-lever mechanism when said tilting section is in its tilted position, said rod having a head of extended width, a second rod carried adjacent to said first-mentioned rod; a lever fulcrumed to the under side of the car and connected at one end to said second rod; a U-shaped section straddling and adapted to be acted upon by the axle of the car and flexibly connected to the other end of said lever; a compound lever suspended adjacent to said lever and connected at one end to the other end of said U-shaped section; a knocker provided with a lateral extension and suspended adjacent to the other end of said compound lever, and a bell located adjacent to said knocker, for the purpose set forth.

JAMES D. LAMB.
JAMES E. CHAPMAN.

Witnesses:
FRED J. SEARS,
R. A. C. KIEUBER.