Dec. 17, 1963 B. ROSS 3,114,236

ILLUMINATION DEVICE FOR WRIST WATCHES

Filed June 28, 1961

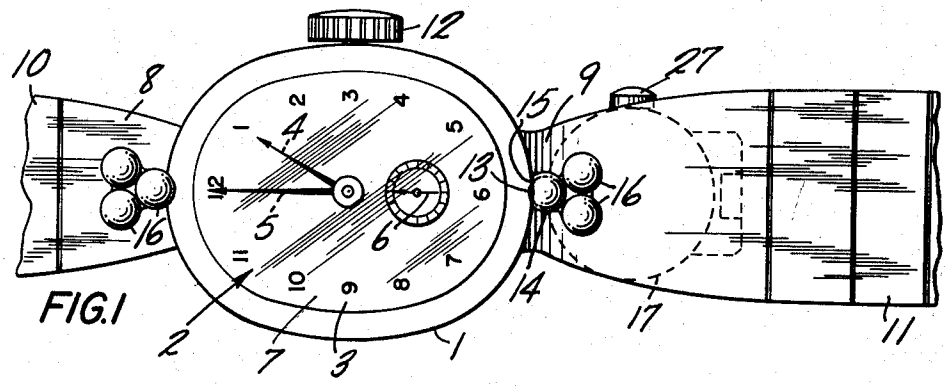

FIG. 1

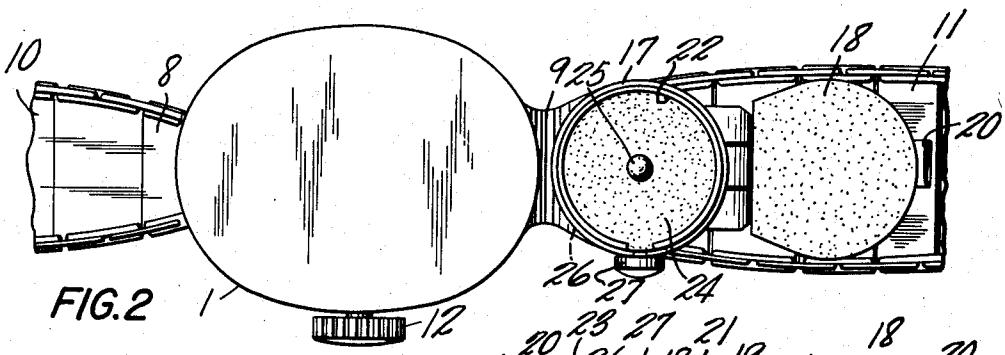

FIG. 2

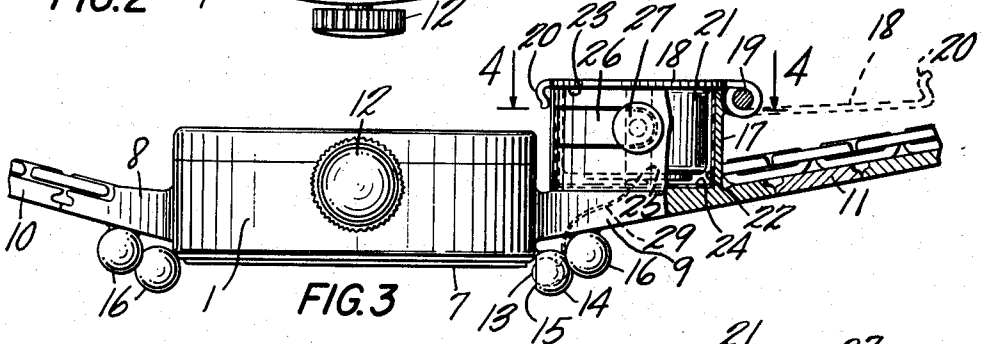

FIG. 3

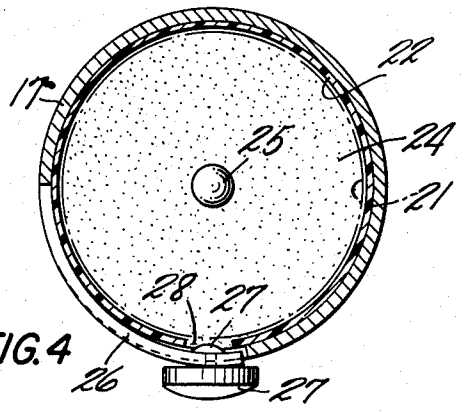

FIG. 4

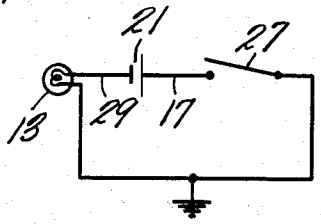

FIG. 5

INVENTOR.
BERNARD ROSS
BY Matthew H. Ross
ATTORNEY

United States Patent Office 3,114,236 Patented Dec. 17, 1963

3,114,236

ILLUMINATION DEVICE FOR WRIST WATCHES

Bernard Ross, 3956 Long Beach Road, Island Park, N.Y.

Filed June 28, 1961, Ser. No. 120,333
1 Claim. (Cl. 58—50)

This invention relates to the illumination of objects, such as watches carrying time indicating means that can be selectively illuminated. Various constructions have been proposed for making the time indicating means of timepieces, such as watches, selectively visible in the dark when one desires to ascertain what time it is, but have not as yet met wide acceptance by the public, except for the use of luminous hands and dial markings.

An object of this invention is to provide a watch with improved means for selectively illuminating its time indicating means, which will not objectionably increase the size of the watch, which is particularly useful on open face wrist watches, and which is convenient, practical, and effective in use, and simple, compact and inexpensive in construction.

Other objects and advantages will appear from the following description of an example of the invention, and the novel features will be particularly pointed out in connection with the appended claim.

In the accompanying drawing:

FIG. 1 is a face view of a wrist watch embodying my invention;

FIG. 2 is a view of the bottom of the same but with the battery casing cover in open position;

FIG. 3 is a side view of the same, with portions broken away to illustrate certain details of construction;

FIG. 4 is a sectional plan of a portion of the battery casing, on a larger scale, the section being taken approximately along the line 4—4 of FIG. 3; and

FIG. 5 is a circuit diagram of the illuminating means.

In the illustrated embodiment of the invention, the watch illustrated is of the type called an open face wrist watch, and has a watch casing 1 in which is provided any suitable time-keeping means 2. In this example the time indicating means has the usual dial 3 with hour markings, hour hand 4, minute hand 5, and second hand 6. The casing is closed on one face by the usual transparent crystal 7 (FIGS. 1 and 3) through which the time indicating means and dial are visible as usual in open face watches. Other time indicating means may be employed instead of a dial and hands movable over the dial, with time indicating numerals thereon that display the numerals successively through light openings in a dial plate. Lugs 8 and 9 are provided on diametrically opposite sides of the casing periphery, and flexible or articulated band sections 10 and 11 are attached to these lugs and when coupled to one another they complete a band that with the casing 1 can encircle the wrist of a wearer as usual in wrist watches. A winding and setting stem 12 extends from the periphery of the casing 1 for operation, and at its inner end it is connected to the time keeping and indicating means to wind the usual spring motor that propels the time-keeping means and to set the hour and minute hands as usual in watches. This construction so far described is of a typical or any suitable wrist watch, and my invention is in the provision of illuminating means by which one may selectively cause illumination of the time indicating means of a watch.

Upon the upper face of lug 9 of casing 1, closely adjacent a margin of the crystal 7, a miniature electric light or lamp 13 is mounted so as to overlook the exposed face of the crystal 7, within a small shell 14 with a window 15 that faces toward the crystal, so that light rays from the light or lamp 13 will fall upon and pass along the exposed face of crystal 7, with some of the light passing through the crystal and illuminating the dial and hands

or other time indicating means beneath the crystal. The shell 14 may be somewhat spherical in shape with one side open or cut off to form a window 15. A plurality of spherical shells 16, similar in size to the shell 14, may be also mounted on the same upper face of lug 9 of the casing 1 beside and abutting the shell 14 in a small grouping or cluster for ornamental purposes. A similar cluster or grouping of such small shells 16 may be mounted similarly on the front face of the lug 8 of the casing, in positions corresponding to the positions of the shells 14 and 16 in their cluster, so as to have the same ornamental appearance of shell clusters on the lugs 8 and 9.

Provided on the rear or back face of the lug 9 is a cylindrical, hollow casing 17, secured at one end face to the rear face of lug 9, and having its opposite end face closed by a cover 18 that is hinged to the casing on a pivot pin 19, and having a spring finger hook 20 at its edge opposite from pin 19 so as to frictionally grip over the edge of the casing, when the cover is closed, and hold it yieldingly in its closed position as shown in full lines in FIG. 3. The open position of the cover 18 enabling the insertion of a miniature battery 21 into casing 17 is shown by dash lines in FIG. 3. The casing 17 has a liner 22 of electrical insulating material confined against the side peripheral wall of the cavity of casing 17 and an insulating liner 23 on the inside face of the cover 18. The bottom of the cavity in casing 17 has an insulating liner 24. The battery has the usual center post electrode which projects from the usual insulated end face of the battery. The exposed face of the liner 24 carries a central metal plate 25 for contact by the center post electrode of the battery, when the battery is inserted within the casing and the cover 18 closed. A tongue 26 that is cut from the peripheral wall of casing 17 extends partially around the peripheral side wall of casing 17, being anchored to the casing 17 by being uncut at one end, and carrying a contact post 27 at its other end. The liner 22 has an aperture 28 (FIG. 4) through which an inward end or extension of post 27 can contact with the metallic side of the battery when the outer enlarged end of post 27 is pressed in a direction inwardly of the casing 17. When post 27 is released it springs back out of contact with the battery side wall due to the fact that when the post 27 was pushed inwardly it flexed the tongue 26 and put it under flexing stress. A wire 29 (FIGS. 3 and 5) connects the plate 25 to one terminal of the miniature electric light or lamp 13, the other terminal of such light being grounded. This electric circuit between the light 13 and the battery 20 may thus be completed by merely pressing the post 27 inwardly of casing 17 to activate the lamp. The latter, when activated, emits light rays that pass over and through the crystal 7 to illuminate the time indicating means within the casing.

While the battery casing 17 and light 13 may be mounted anywhere on the exterior of the watch casing 1 adjacent an edge of the crystal 7, they are conveniently mounted on the lugs on the watch casing to which the wrist encircling band sections 10 and 11 are coupled.

It will be understood that various changes in the details, materials and arrangements of parts, which have been herein described and illustrated in order to explain the nature of the invention may be made by those skilled in the art within the principle and scope of the invention, as expressed in the appended claim.

I claim:

A wrist watch comprising an open face case closed on one face by a transparent crystal, time-keeping means within said casing and having time indicating means disposed beneath and visible through said crystal, wrist band means connected to opposite margins of said case and forming therewith a unit for confining said case to the wrist of a wearer, with said crystal exposed for inspection

of said time-keeping means, miniature electric illuminating means mounted on the continuously exposed face of said unit adjoining a margin of said case and one said band means in a position to direct light rays across said crystal, and illuminate said time-keeping means, a shell mounted on said one band means, adjacent to said illuminating means, on the face thereof which abuts the wrist of the wearer, and having a movable closure on its exposed face providing access to the interior of said shell for the insertion into said shell and removal therefrom of a miniature electric battery, and which closure is confined against movement to an open position by contact with the wrist of the wearer, and electric connections between any battery in said shell and said illuminating means to complete an activating circuit from said battery to said illuminating means, and including therein a switch in said circuit disposed on a side of said shell by which said circuit may be completed when illumination of said time-keeping means is desired, said shell being of metal with a tongue struck from its side wall, extending in a direction circumferentially of the shell for a portion only of the periphery of the shell, and flexible with a free end thereof movable in a direction into the interior of the shell and

carrying a contact on its said free end for engagement with the peripheral wall of any dry battery in said shell, said shell having an insulating lining with an aperture therethrough aligned with the said free end of said tongue through which said contact may pass to engage the peripheral wall of any battery in said shell, when the free end of said tongue is pushed inwardly of the shell, said tongue and its said contact forming the movable part of said switch and being connected in series in said electric connections from the illuminating means to any dry battery confined in said shell.

References Cited in the file of this patent

UNITED STATES PATENTS

2,681,982	Seegrist	June 22, 1954
2,763,773	Morente	Sept. 18, 1956
3,025,662	Fleishman et al.	Mar. 20, 1962

FOREIGN PATENTS

1,057,194	France	Oct. 28, 1953
1,085,121	France	July 21, 1954
343,921	Switzerland	Feb. 29, 1960
609,875	Canada	Dec. 6, 1960